noiembrie 2009
ISSN 1454-8003

HERVEX

Ediția a XVII - a

HERVEX 2009

Hydraulics ; Pneumatics ; Fine mechanics
Tools ; Mecatronics ; Sealing systems
Dedicated electronic devices and equipment

Noiembrie 2009
Editia a XVII-a

November 2009
17th Edition

SALONUL INTERNATIONAL
INTERNATIONAL SALON

HERVEX
2009

Hidraulica ; Pneumatica ; Elemente de etansare
Mecanica fina ; Scule ; Mecatronica
Dispozitive si echipamente electronice specifice

Hydraulics ; Pneumatics ; Sealing systems
Fine mechanics ; Tools ; Mecatronics
Dedicated electronic devices and equipment

SIMPOZION EXPOZITIE BROKERAJ
SIMPOSYUM EXHIBITION BROKERAGE

CALIMANESTI - CACIULATA, 18-20 NOIEMBRIE 2009
CALIMANESTI - CACIULATA, 18-20 NOVEMBER 2009

ORGANIZATORI

CAMERA DE COMERT SI INDUSTRIE VALCEA

INSTITUTUL DE CERCETARI PENTRU HIDRAULICA SI PNEUMATICA BUCURESTI

UNIVERSITATEA POLITEHNICA BUCURESTI

ORGANIZERS

CHAMBER OF COMMERCE AND INDUSTRY VALCEA

HYDRAULICS AND PNEUMATICS RESEARCH INSTITUTE BUCHAREST

"POLITEHNICA" UNIVERSITY OF BUCHAREST

Conferinta desfasurata sub patronajul
- CETOP
- Ministerul Educației, Cercetării şi Inovării

Conference held under the patronage of
- CETOP
- Romanian Ministry of Education, Research and Innovation

COMITETUL DE ONOARE

Etienne PIOT - Presedinte CETOP
Elmar DORGELOH - University of Aachen
Petrin DRUMEA - INOE 2000 IHP Bucuresti
Valentin CISMARU - CCI Valcea

COMMITTEE OF HONOUR

Etienne PIOT - President of CETOP
Elmar DORGELOH - University of Aachen
Petrin DRUMEA - INOE 2000 IHP Bucharest
Valentin CISMARU - CCI Valcea

Editat de Institutul de Cercetari pentru Hidraulica si Pneumatica din Bucuresti
Camera de Comert si Industrie Valcea
cu sprijinul Asociatiei Nationale Profesionale de Hidraulica si Pneumatica din Romania - "FLUIDAS"

SPONSORS

HYDRAMOLD®
ECHIPAMENT HIDRAULIC DE FORȚĂ

SC Hydramold SRL
700050 Iasi, str. D. Mangeron nr. 49

Parker

Parker Hannifin Romania
Bucuresti, Bd. Ferdinand nr.27, Sector 2

RF® S.C. R O M F L U I D S.A.

SC ROMFLUID SA
Str. Cutitul de Argint nr. 14, sector 4 ,
Bucuresti, Romania

ORGANIZING COMMITTEE

A. COORDINATION BOARD

Eng. Gheorghe RIZOIU - CCI Valcea
Ph.D.Eng. Corneliu CRISTESCU - INOE 2000 IHP Bucharest
Lect. Ph.D.Eng. Erol MURAD - “POLITEHNICA” University of Bucharest

B. MEMBERS

Ph.D.Eng. Mohamed HAJJAM - University of Poitiers - IUT Angouléme Franta
Prof.Ph.D.Eng. Nicolae ALEXANDRESCU - “POLITEHNICA” University of Bucharest
Eng. Ionel ANDREI - Ministry of Education, Research and Innovation
Eng. Radu ALEXANDRU - FESTO S.R.L.
Prof.Ph.D.Eng. Victor BALASOIU - “POLITEHNICA” University of Timisoara
Prof.Ph.D.Eng. Valeriu BANU - S.M.C. Romania
Prof.Ph.D.Eng. Mircea BARGLAZAN - “POLITEHNICA” University of Timisoara
Prof.Ph.D.Eng. Guido BELFORTE - “POLITEHNICA” University of Torino
Ph.D.Eng. Amadio BOLTZANI - ASSOFLUID - Italy
Eng. Marius BURLANESCU - S.C. HERVIL Ramnicu Valcea
Prof.Ph.D.Eng. Doru CALARASU - “Gh. Asachi” University of Iasi
Eng. Ioan CAMPEAN - S.C. HIDROSIB S.A. Sibiu
Lect. Ph.D.Eng. Constantin CHIRITA - “Gh. Asachi” University of Iasi
Ph.D.Eng. Tudor CRACIUNOIU - S.C. ICTCM S.A. Bucharest
Ph.D.Eng. Iosif COJOCARU - INMA Bucharest
Ph.D.Eng. Corneliu CRISTESCU - IHP Bucharest
Eng. Mircea DANCIU - PARKER HANNIFIN Corporation Romania
Eng. Daniela ENESCU - S.C. HYDAC S.R.L. Romania Ploiesti
Prof.Ph.D.Eng. Gheorghe GHEORGHE - INCDMTM Fine Mechanics Bucharest
Eng. Mihaela IONITA - AA FLUID TEHNIK IMPORT Bucharest
Prof.Ph.D.Eng. Vasile JAVGUREANU - Technical Faculty of Chisinau Moldova
PhD.St. Eng. Ioan LEPADATU - INOE 2000 -IHP Bucharest
Eng. Leopold LUPUSANSCHI- S.C. CEROB S.R.L. Bucharest
Prof.Ph.D.Eng. Pavel MACH - Technical University of Praga Cehia
Ph.D.Eng. Daniel MARIN- S.C. General Fluid S.A. Bucharest
Eng. Eduard MILEA - S.C. PROCONS S.R.L. Bucharest
Ph.D.Eng. Adrian MIREA - ROMFLUID Bucharest

Eng. Ioan MOLDOVEANU - Festo S.R.L.
Ph.D.Eng. Andrei DRUMEA - “POLITEHNICA” University of Bucharest- CETTI
Prof. Ph.D.Eng. Erol MURAD - “POLITEHNICA” University of Bucharest
Prof. Ph.D.Eng. Johann NICOLICI - Technical University of Viena Austria
Eng. Cristian Sen - SUSZI - INDUSTRIAL SRL Constanta
Prof. Ph.D.Eng. Petru PATRUT - Technical University of Civil Engineering of Bucharest
Ph.D.Eng. Ion PIRNA- INMA Bucharest
Ph.D.Eng. Mircea PRICOP- S.C. HESPER S.A. Bucharest
Eng. Petru BREAZ - HIDRAULICA U.M. PLOPENI - Plopeni
Prof. Ph.D.Eng. Paul SVASTA - “POLITEHNICA” University of Bucharest
Ph.D.Eng. Roger J.SPERI - ETNA Industrie - Franta
Prof. Ph.D.Eng.Liviu VAIDA - Technical University of Cluj-Napoca
Prof. Ph.D.Eng. Nicolae VASILIU - “POLITEHNICA” University of Bucharest
Eng. Nicolae TASU - HANSA FLEX Romania
PhD.Eng. Henryk CHROSTOWSKI - Institute of Machine Design and Operation, Wroclaw University of Technology

EXECUTIVE COMMITTEE

Eng. Valentin CISMARU - CCI Valcea
Ph.D.Eng. Petrin DRUMEA - INOE 2000 IHP Bucharest
Lect. Ph.D.Eng. Constantin CHIRITA - “Gh. Asachi” University of Iasi
Eng. Mircea DANCIU - PARKER HANNIFIN Corporation Romania
Prof. Ph.D.Eng. Gheorghe - GHEORGHE - INCDMTM Bucharest
Prof. Ph.D.Eng. Alexandru MARIN - “POLITEHNICA” University of Bucharest
Lect. Ph.D.Eng. Erol MURAD - “POLITEHNICA” University of Bucharest
Eng. Cristian SEN - SUSZI-INDUSTRIAL SRL Constanta
Prof. Ph.D.Eng. Paul SVASTA - “POLITEHNICA” University of Bucharest
Ph.D.Eng. Adrian MIREA - ROMFLUID Bucharest
Eng. Gheorghe RIZOIU - CCI Valcea
Ph.D.Eng. Corneliu CRISTESCU - INOE 2000 -IHP Bucharest

SECRETARIATE OF E.C.
Valentin MIROIU - INOE 2000 -IHP Bucharest
PhD. St. Eng. Iulian DUTU - INOE 2000 -IHP Bucharest
Genoveva CHIRCA - CCI Valcea

ORGANIZING TEAM OF EXHIBITION

Bogdan RENTEA - CCI Ramnicu Valcea

PhD.St. Eng. Ioan LEPADATU - INOE 2000 -IHP Bucharest

COMMITTEE FOR PROCEEDINGS OF SYMPOSIUM

COMMITTEE OF SPECIALIZED REFERENCES

Eng. Peter ABPLANALP - BIBUS -Switzerland

Prof. Ph.D.Eng. Ilare BORDEASU - "POLITEHNICA" University of Timisoara

Prof. Ph.D.Eng. Guido BELFORTE - "POLITEHNICA" University of Torino

Ph.D.Eng. Petrin DRUMEA - INOE 2000 - IHP Bucharest

Prof. Ph.D.Eng. Nicolae ALEXANDRESCU -"POLITEHNICA" University of Bucharest

Ph.D.Eng. Corneliu CRISTESCU - INOE 2000 IHP Bucharest

Lect. Ph.D.Eng. Constantin CHIRITA - "Gh. Asachi" University of Iasi

Math. Eng. Gabriel RADULESCU - INOE 2000 - IHP Bucharest

Ph.D.Eng.. Mohamed HAJJAM - University of Poitiers - IUT Angouléme Franta

Prof. Ph.D.Eng.. Vasile JAVGUREANU - Technical Faculty of Chisinau Moldova

Prof. Ph.D.Eng.. Pavel MACH - Technical University of Praga Cehia

Prof. Ph.D.Eng. Johann NICOLICS - Technical University of Viena Austria

Ph.D.Eng. Elmar DORGELOH- University of Aachen

EDITORIAL BOARD

Chief Editor - Ph.D.Eng. Gabriela MATACHE

Editor - Assist. Ana-Maria Carla POPESCU

- Valentin MIROIU

Design & DTP - Valentin MIROIU

PUBLICATION MANAGER

Ph.D.Eng. Petrin DRUMEA

EDITORIAL

Editia din acest an a salonului de hidraulica si pneumatica se desfasoara intr-o perioada de adanca recesiune care se resimte la toti participantii traditionali atat la nivelul cifrei de afaceri cat mai ales la nivelul pregatirii viitorului. Simtim la prietenii nostri o teama de viitor pe care nu o cunosteam si nu o mai vazusem la ei, un sentiment de nesiguranta si probabil cel mai grav o lipsa de suporti predictibili ai dezvoltarii ulterioare a afacerilor. Intelegand realitatea situatiei, organizatorii au decis ca expozitia sa fie redusa la un minim functional, care sa reduca cheltuielile, dar sa pastreze utilitatea si ideea de prezentare a noutatilor tehnice.

Ph.D.Eng. **Petrin DRUMEA**
MANAGER
Hydraulics & Pneumatics Research Institute

Noi consideram ca iesirea din criza se va face si printr-o intensa activitate de inovare, motiv pentru care am decis sa orientam actiunea spre prezentarea noutatilor cu preponderenta a celor care pot sprijini imediat activitatea economica. Pentru Romania criza poate jalona un nou inceput in dezvoltarea economico-sociala cu asigurarea legarii productiei si cercetarii de cerintele actuale, la nivelul tehnic international. In acest sens majoritatea materialelor tehnico-stiintifice prezentate la simpozion sunt strans legate de realizari concrete, de bun nivel tehnic si stiintific si care fac apel la tehnologii accesibile tarii noastre.

Din cele peste 70 de articole acceptate de organizatori peste 50 se refera la cercetarea aplicativa, la dezvoltarea tehnologica si la inovare, subliniind si in acest fel dorinta noastra de apropiere de realitatea economica de la noi. Se poate vedea de asemenea larga audienta in plan national si international a salonului national de hidraulica si pneumatica HERVEX 2009 prin numarul mare de autori si numarul mare de firme de unde provin acestia.

De asemenea este de remarcat numarul mare de articole scrise de colective mixte din cercetare si productie subliniind inca o data aplecarea smpozionului spre realitatea economica, spre productie. Ca urmare a faptului ca numarul specialistilor straini participanti este destul de important-peste 25- o parte dintre work-shopuri se vor desfasura in limba engleza si vor fi coordonate de personalitati din Germania, Cehia, Italia si Bulgaria.

Toate noutatile introduse se vor sprijini pe castigurile anilor trecuti cum ar fi tematica, modalitatile de desfasurare si participarea puternica a beneficiarilor. Sedintele de brokeraj, work-shopurile pe teme de depoluare sau cele legate de pregatirea specialistilor se desfasoara in conditiile apartenentei Romaniei la Comunitatea Europeana.

De asemenea trebuie mentionat ca si in acest an salonul se sprijina pe cei trei piloni traditionali- INOE 2000-IHP, CCIVL si UPB si ca totul se desfasoara sub egida asociatiei profesionale nationala FLUIDAS si a CETOP.

Multumim tuturor specialistilor care participa atat la expozitie cat si la simpozion cat si tuturor vizitatorilor.

Va dorim succes si multa sanatate.

EDITORIAL

Ph.D.Eng. **Petrin DRUMEA**
MANAGER
Hydraulics & Pneumatics Research Institute

This year's edition of the hydraulic and pneumatic salon takes place in a deep period of recess which is being felt by all traditional participants not only at the business level but also at the level of future preparation.

We feel at our friends a fear for the future which we have not known and seen at them, a feeling of hesitation and probably the worst, a lack of predictable support of further development of the business.

Understanding the reality of the situation, the organizers have decided that the exhibition would be reduced at minimal function, which will reduce the costs, but will keep the utility and the idea of presenting new techniques.

We consider that the way out of crisis will take place through an intense innovation activity, reason for which we have decided to focus the action towards presenting new things, especially those which can support the immediate economical activity.

For Romania, the crisis may set out a new start in the economical and social development with the insurance that will be a connection between the production and research at the level of present requests, on the international technical level.

In this way, the majority of the technical and scientifically materials presented at the symposium are tight bind by concrete realizations, by a good technical and scientifically level which makes appeal at accessible technologies in our country.

From over 70 articles accepted by the organizers, over 50 was about the applied research, about the technological development and innovation, this way underlining our wish for an approach to ours economical reality.

It may also be seen the wide audience at a national and international level of the hydraulic and pneumatic national salon HERVEX 2009 through its big number of authors and firms from where they come from.

Also it's remarkable the amount of written articles by mixed collectives from research and production, underlining once again the inclination of the symposium towards economical reality and production.

Considering the fact that the number of foreign specialists participants it's rather important – over 25 – a part of the work-shops will be held in English and will be coordinated by personalities from Germany, Czech Republic, Italy and Bulgaria.

All the introduced novelties will be upheld on the past years gain like thematic, ways of unfolding and the powerful participation of the beneficiaries.

The broker sessions, the work-shops on de-pollution or the one connected to the specialist preparation take place in the conditions of the Romanian appurtenance to the European Community.

Also, there has to be mentioned that this year the salon is being uphold on three traditional pylons – INOE 2000 – IHP, CCIVL and UPB and that everything takes place under the aegis of the national professional association FLUIDAS and CETOP.

We thank-you all the specialists that are participating not only at the exhibition but also at the symposium and nevertheless the visitors.

We wish you all luck and health.

CONTENTS

SECTION 1.THEORETICAL AND EXPERIMENTAL STUDIES AND RESEARCH

MARKET OF FLUID POWER DURING A PERIOD OF CRISIS; POLAND,EUROPE AND GLOBAL
Henryk CHROSTOWSKI, Zygmunt POPCZYK, Jolanta SZADKOWSKA 14-25

SIMULATION OF DYNAMIC PHENOMENA IN HYDRAULIC PROP FOR WALL LINING
Zygmunt Domagala, Krzysztof Kedzia, Jaroslaw Prokopowicz, Zygmunt Popczyk, 26-30

HYBRID DRIVE PROTOTYPES INVESTIGATED AT THE TECHNICAL UNIVERSITY OF LÓDT
Zbigniew Pwelski 31-36

THEORETICAL RESEARCH ON THE DEVELOPMENT OF AN EXPERIMENTAL DEVICE TO EVALUATING THE FRICTION FORCES BETWEEN SEALS AND RODS OF HYDRAULIC CYLINDERS
Petrin Drumea , Mohamed HAJJAM, Corneliu Cristescu , Aurelian FATU 37-45

INNOVATIVE APPROACH IN THE IMPLEMENTATION OF THE INDUSTRIAL ROBOTS INTO THE NEURO-MOTOR REHABILITATION
Daniel Bratanov, Petre Lucian Seiciu 46-49

ADAPTIVE CONTROL SYSTEMS WITH MODIFICATION BY STEP FOR HORIZONTAL AXIS WIND TURBINES
Lucian NASCUTIU, Daniel BANYAI, Lucian MARCU, Liviu VAIDA 50-60

RESEARCH ON THE OPERATING REGIME OF DIRECTIONAL CONTROL VALVES OF VARIANT SURFACE GRADIENT
Dragos Daniel ION GUTA 61-66

EXTRAHARD MATERIALS DYNAMICS COMPRESSION BEHAVIOR CHECKING SYSTEM
Aurel ZAPCIU 67-71

THE CAVITATION IN ZONE BODY-SPOOL VALVE FOR HYDRAULIC DISTRIBUTOR
Victor BALASOIU, Iare BORDEASU, Mircea Octavian POPOVICIU 72-75

FOUNDATION OF A ROMANIAN-GERMAN TESTING INSTITUTE FOR ENVIRONMENTAL CONSTRUCTION PRODUCTS IN ROMANIA
Patricia Khan, Britta S. Boettcher, Elmar Dorgeloh 76-78

STABILITY OF LINEAR SYSTEMS
RÃDULESCU Gabriel, RÃDOI Radu, MIHAI Niculaie 79-86

CRITICAL ASPECTS OF THE NEW PARADIGM OF TOTAL INNOVATION MANAGEMENT – ON A PROCEDURE FOR THE EVALUATION OF THE INNOVATIVE POTENTIAL
Alexandru Marin, Dan C. Badea, Ioan Plotog 87-96

IMPROVING THE RELIABILITY OF A GUIDE VANE ACTUATING MECHANISM FOR BULB - TYPE UNITS
Mircea BÃRGLÃZAN, Ilare BORDEASU, Mircea POPOVICIU, Victor BÃLÃSOIU, Lucian MÃDÃRAS, Cãtãlin STROITÃ 97-103

STANDARD DIAGRAMS MULTIPLE CAUSES - EFFECT ONLY FOR HYDRAULIC DRIVE OF TECHNOLOGYCAL DEVICES
Nicolae GHERGHEL, Adrian-Constantin HANGANU 104-112

FLUIDS PREAMPLIFIERS
Gabriel RÃDULESCU, Radu RÃDOI, Niculaie MIHAI 113-116

SECTION 2. MECHATRONICS, AUTOMATION AND ROBOTICS, STANDS

THE LABORATORY MODEL STUDY OF A NUMBER OF HYBRID SOLUTIONS FOR VEHICLE TRACTION, AND ELECTRIC POWER SUPPLY
Emilian LEFTER, Luminita-Mirela CONSTANTINESCU, Eugen DIACONESCU 117-123

RADIO SENSOR SYSTEM FOR MONITORING TEMPERATURE AND HUMIDITY WITH REMOTE ACCESS
Andrei DRUMEA, Bogdan LUPU, Iulian DUTU, Alexandru VASILE 124-128

OPTIMIZATION OF ENERGY CONSUMPTION BY AUTOMATICALLY LEAD PROCESSES SYSTEM OF DRYING CONVECTION
Erol Murad, Tudor Chereches 129-134

MECHATRONIC EQUIPMENTS FOR RESEARCH OF KINETIC ENERGY RECOVERY PROCESSES IN AUTOMOTIVE BRAKING
Corneliu CRISTESCU, Petrin DRUMEA 135-140

PNEUMO HYDRAULIC INSTALLATION FOR POWERING SERVO MOTORS OF THE HEAD APPARATUS AND BLADES OF THE ROTOR OF THE KAPLAN AND FRANCIS TURBINES WITH AUTOMATIC SETUP
Florian-Petre DAIA, Petre TIRIPLICA, Ion TIRIPLICA, Simona Greta NEMTOIU 141-144

ASSISTED OPTIMISATION OF THE ROBOT DYNAMIC BEHAVIOR WITH MAGNETORHEOLOGICAL DAMPER
Adrian OLARU, Serban OLARU 145-150

WOBBLER HF ORDERED ON PC
Cosmin Tãmas, Alexandru Vasile, Gaudentiu Vãrzaru, Andrei Drumea 151-153

RESEARCH AND TESTING INFRASTRUCTURE OF THE HYDRAULICS AND PNEUMATICS RESEARCH INSTITUTE INOE 2000-IHP
Petrin DRUMEA, Corneliu CRISTESCU 154-164

START SLOW OF HIGH POWER EQUIPMENT
Cosmin Tãmas, Victor Vulpe 165-166

MECHATRONIC APPROACHES OF PNEUMATIC POSITIONING UNITS
Mihai AVRAM, Valeriu BANU, Constantin BUCSAN, Despina DUMINICÃ, Viorel GHEORGHE, LUCIAN BOGATU 167-171

LABORATORY FOR TESTING OF THE COMPONENTS AND LUBRICATION EQUIPMENTS
Corneliu CRISTESCU, Petrin DRUMEA 172-175

SIMESIM- THE MECHATRONIC SYSTEM FOR RECOVERY OF THE LOCOMOTORY DISABLED
Petre Lucian SEICIU, Ioan Dan FILIPOIU, Tiberiu LAURIAN, Valentin BARBU 176-181

COMPLEX SYSTEMS FOR ELECTROHYDRAULIC DRIVE MECHATRONIC
Gabriel RÃDULESCU, Radu RÃDOI, Iulian DUTU 182-187

ACQUISITION SYSTEM FOR CAPACITIVE PRESSURE SENSORS IN LTCC TECHNOLOGY
Cosmin Tamas, Cristina Marghescu, Ciprian Ionescu 188-191

THE DYNAMICS OF THE PNEUMATIC TRANSDUCERS WITH LOW ENERGY CONSUMPTION FOR MEASURING FORCES IN SLOW PROCESSES
Erol Murad, Edmond Maican, Alexandru Marin, Cãtãlin Dumitrescu 192-196

MEASURING PRESSURE USING PIEZO-RESISTIVE SENSORS IN LTCC TECHNOLOGY
Cosmin Tãmas, Cristina Marghescu, Ciprian Ionescu, Norocel-Dragos Codreanu 197-201

INFORMATIC SYSTEM FOR BLENDED WINES PROCESS
M. Blejan,B. Lupu, I. Ilie, A. Fedorov,V. Nica 202-207

THEORETICAL AND EXPERIMENTAL RESEARCH ABOUT MECHATRONIC SYSTEMS USED FOR DRIVING, ADJUSTING AND CONTROL OF THE PRESSURE -FLOW PARAMETERS AT SOME HYDRAULIC AND PNEUMATIC EQUIPMENT
Mircea RADULESCU, Ionita NICULAE, Danut ROTARU, Constantin ANGHEL, Adrian MIREA 208-213

RECOVER ENERGY AT THE ENDURANCE STANDS OF THE ROTARY VOLUMETRIC MACHINES
Teodor Costinel POPESCU, , LEPADATU Ioan, ION GUTA Daniel 214-221

SECTION 3.ENVIRONMENTAL ECOLOGY AND IRRIGATIONS, ENERGY

MAIN FEATURES OF THE CENTRALISED AND DECENTRALISED WASTEWATER TREATMENT
Britta S. BOETTCHER 222-235

RESULTS ON CRUDE VEGETABLE OIL COMBUSTION IN LOW AND MEDIUM SIZE BOILERS FOR ENERGY GENERATION
Radulescu Alexandru, Garjoaba Mihu,Toma Alexandra, Bogatu George 236-240

LAND RECLAMATION SECTOR IN VALCEA COUNTY
Maria PASCU, Ion COSTACHE, 241-244

NITRATE DE-POLLUTION BY OZONE, OF WATER USED IN IRRIGATION
Constantin-Nicolae DRAGANESCU, Diana PRUNARU 245-249

WATER ANALYSIS AND QUALITY CONTROL IN ENVIRONMENT ANALYSIS LABORATORY, ICIA CLUJ-NAPOCA
Senila Marin, Abraham Bela, Levei Erika, Miclean Mirela, Tanaselia Claudiu, Roman Cecilia 250-255

TECHNOLOGY AND EQUIPMENT FOR PRODUCING PELLETS
Marian TOPOLOGEANU, Sebastian RADU 256-258

STUDIES REGARDING THE IMPLEMENTATION OF A NEW TECHNOLOGY FOR HARVESTING CORN COBS BEFORE RIPENING
Lucian STANCIU, Emil VOICU,Iosif COJOCARU, Marius STAN, Alexandru COCIU 259-264

APPLICATIONS OF THE TECHNIQUE OF DIFFUSIVE GRADIENTS IN THIN FILMS (DGT) FOR METALS DETERMINATIONS IN RIVER WATERS AFFECTED BY MINING ACTIVITIES
Marin Senilã, Erika Levei, Lãcrimioara Senilã, Marius Roman, Mirela Miclean, Abraham Bela, Mircea Chintoanu 265-269

DEVELOPMENT AND IMPLEMENTATION OF TECHNOLOGIES AND EQUIPMENTS FOR ACHIEVING FUEL PRODUCTS LIKE PELLETS
Marian TOPOLOGEANU, Radu Catalin TARCA, Sebastian RADU 270-273

ADVANCED ALGORITHM FOR OPTIMAL DIMENSIONING OF A SIEVING EQUIPMENT FOR WASTEWATER WITH CYLINDRICAL SCREEN
Victor-Viorel SAFTA, Erol MURAD, Georgeta HARAGA, Magdalena-Laura TOMA 274-281

HEAVY METAL POLLUTION IN THE UPPER SOMES RIVER, ROMANIA
Cecilia Roman, Mirela Miclean, Erika Levei, Marin Senila, Claudiu Tanaselia 282-285

NEW TECHNOLOGY FOR MELLOWING, NOURISHING AND DEEP AIRING OF SOILS
Iosif COJOCARU, Nicolae CONSTANTIN,Ion PIRNA,Eugen MARIN, Alexandru COCIU 286-290

CONSIDERATIONS REGARDING SUSTAINABLE DEVELOPMENT IN THE RURAL AREA IN THE CONTEXT OF A HIGH LEVEL WATER MANAGEMENT
C. NICOLESCU, I. BIOLAN, Florica MARDARE, Gh. SOVAIALA 291-294

DOSIMETER FOR CORN KERNELS BURNERS
Erol MURAD , Victor-Viorel SAFTA , Georgeta HARAGA , Sava ANGHEL 295-299

EQUIPMENT FOR RECYCLING PLASTIC FOOD WRAPS
Mariana Florentina STEFÃNESCU, Radu SAUCIUC, Liliana DUMITRESCU, Grigore NITU 300-307

STUDY REGARDING THE USE OF WASTE WATERS FROM LIVE STOCK FARMS FOR FERTILIZING THE CULTURES
I. BIOLAN, C. NICOLESCU, N. NICULAE, Florica MARDARE, Carmen NECULA 308-313

SECTION 4. MODERNIZATION AND NEW PRODUCTS, TECHNOLOGICAL TRANSFER

NEW METHODS OF INTERVENTION ON PIPES FILLED WITH FLUID UNDER PRESSURE
Stefan ALEXANDRESCU, Costinel POPESCU, Daniel MARIN, Despina DUMINICA 314-318

UPDRAFT GASIFIER FOR WASTE BIOMASS VALORIFICATION
Pasculete Elisabeta, Condrea Florentina,Mihai Macavescu 319-328

TECHNOLOGICAL TRANSFER AND INNOVATION PARTNERSHIP FOR THE REINFORCEMENT OF THE MINERAL RESOURCES ECONOMIC SECTOR IN SOUTH-EAST EUROPEAN COUNTRIES
Radu JECU, Ioana-Carmen POPESCU 329-335

HYDRAULIC DRAWING EQUIPMENT FOR THE REFLOATING “TRANSILVANIA” SHIPS
CONSTANTIN CHIRITA, CORNELIU CONSTANTIN DUCA, DANIEL CALFA, ADRIAN CONSTANTIN HANGANU 336-339

AUTOMATIC ADJUSTMENT FOR HYDRAULIC TRANSMISSIONS OF THE AEOLIAN SYSTEMS FOR ENERGY PRODUCTION
Daniel BANYAI, Lucian NASCUTIU, Liviu VAIDA, Lucian MARCU 340-349

PERFECTION TECHNOLOGY FOR SOWING HOEING PLANT BY USING MODERN TECHNICAL EQUIPMENT PROVIDED WITH DEVICES FOR DISTRIBUTION FERTILIZERS AND INSECTICIDES MICROGRANULATED
Eugen MARIN, Ion PIRNÃ , Iosif COJOCARU, Dragos MANEA, Cristian SORICA 350-355

RANGE OF HYDRAULIC LIFTING EQUIPMENT, USING HIGH - PRESSURE FLUID
Laurentiu VEBER, Catalin DUMITRESCU, Florin GEORGESCU 356-359

TECHNIQUES AND EQUIPMENT FOR THE COMPUTERIZED CHECK UP OF THE TIGHTNESS OF BALL CHAIRS FROM DRILLING PUMPS
Aurel ZAPCIU 360-365

MOBILE MACHINE WITH INTERCHANGEABLE MULTIFUNCTION EQUIPMENTS FOR THE HANDLING OF MATERIALS FROM AGRICULTURE, FORESTRY, CIVIL AND INDUSTRIAL CONSTRUCTIONS
Constantin CHIRITÃ, Daniel CALFA, Corneliu Constantin DUCA, Gheorghe PLESU 366-371

MOBILE ECOLOGICAL DRYERS PURPOSEFULLY CREATED FOR HIGH LANDS
Erol Murad,Cristian Predescu, Gheorghe Rizoiu, Cristian Sima 372-379

HARROW WITH AUTONOMOUS DISKS FOR TRACTORS OF 120÷220 HP
Nicolae CONSTANTIN, Iosif COJOCARU, Ion PIRNA,Ion LEU 380-384

EXPERIMENTAL INSTALLATION FOR “T” JONCTIONS TUBE HIDROFORMING AT HIGH PRESSURES
Constantin CHIRITA, Gheorghe PLESU, Mircea FRUNZA,Corneliu DUCA, Alexandru COPTU 385-391

AUTOMATIC ELECTROHYDRAULIC SYSTEM FOR MAKING BARS FROM SPECIAL ALLOYS
Gabriel RADULESCU, Radu RADOI, Iulian DUTU 392-396

MOBILE MACHINE WITH INTERCHANGEABLE MULTIFUNCTION EQUIPMENTS FOR THE HANDLING OF MATERIALS FROM AGRICULTURE, FORESTRY, CIVIL AND INDUSTRIAL CONSTRUCTIONS
CONSTANTIN CHIRITÃ, DANIEL CALFA, CORNELIU DUCA, GHEORGHE PLESU 397-402

TECHNOLOGY AND ASSEMBLIES OF COMBINED SEALING WITH ELASTOMERS AND FABRIC FOR HIGH PRESSURES AND AGGRESIVE ENVIRONMENTS
Adrian Mirea, ANGHEL Sava 403-405

SIMULTANEOUS TIGHTENING WITH HYDRAULIC BOLT TENSIONERS
Adrian Constantin HANGANU, Constantin CHIRITÃ 406-409

TECHNOLOGY AND EQUIPMENT FOR COMPLEX SURFACES NANOFINISHING BY ABASIVE FLOW MACHINING WITH REOPECTIC WORK MEDIUMS
Valeriu AVRAMESCU, Roxana GREJDANESCU, Norvegia Elena AVRAMESCU, Gheorghe ORSANU, Catalin Horia ORSANU, Loredana Theodora PAUN 410-415

A METHOLOGY FOR THE REFLOATING STRANDED SHIPS
Constantin CHIRITÃ, Gheorghe PLESU, Daniel CALFA, Adrian Constantin HANGANU, Corneliu Constantin DUCA, Dumitru SIRBU 416-422

ALGORITHM FOR CALCULATING THEORETICAL COMBUSTION TEMPERATURE
Adrian ROTARIU, Tiberiu HOMUTESCU,Tudor CHERECHES, Alin-Constantin SAVA 423-429

OPTIMUM POSITION OF PHREATIC LEVEL IN THE MEADOW AND REALIABILITY OF WATERING EQUIPMENT BLOCK
C. NICOLESCU, D. BUCUR, Gh. SOVÃIALÃ, I. BIOLAN 430-435

MODELLING THE GAS FLOW GENERATED AT COMBUSTION OF THE THROWING LOAD OF THE BARRELLED GUNS SYSTEMS
Adrian ROTARIU, Tiberiu HOMUTESCU,Tudor CHERECHES, Alin-Constantin SAVA 436-441

THERMAL INSTALLATIONS FOR PRODUCING OF DHW USING SOLAR PANELS, FOR SINGLE-FAMILY DWELLINGS - SOLUTIONS AND EXPERIMENTAL RESULTS
Adrian MIREA, Catalin Dumitrescu, Florin GEORGESCU 442-448

AUTHOR INDEX 449-453

COMPANIES INDEX 454-455

MARKET OF FLUID POWER DURING A PERIOD OF CRISIS; POLAND, EUROPE AND GLOBAL

PIAȚA DE ACTIONARI HIDRAULICE PE PERIOADA DE CRIZA; POLONIA, EUROPA ŞI PE PLAN MONDIAL

Henryk CHROSTOWSKI, PhD*
Institute of Machine Design and Operation, Wroclaw University of Technology
Zygmunt POPCZYK, PhD
Institute of Machine Design and Operation, Wroclaw University of Technology
Jolanta SZADKOWSKA, PhD
Cracow University of Technology

Abstract:
CETOP – The European Fluid Power Committee and ISC Area Fluid Power compile, gather, study and make available the present-day data about the market to its members. The paper presents the global and European market of machinery and equipment, in particular the hydraulics of hydraulics and its major shareholders: USA, China, Japan and CETOP member-countries.
The dynamics of the transformations on the global, European markets, also in the countries being significant in that area has been shown. The abruptness of the sale drop in the hydraulic and pneumatic products has been related to the drop in the production volume of machinery and equipment, and to the general economic situation of national economies being in slowdown, recession or crisis. The study of the hydraulics and pneumatics sector is based on the most recent data; comparisons: January – December 2008 vs. 2007, also the 1st Quarter 2009 vs. the 1st Quarter 2008.

1. INTRODUCTION

The demand for hydraulic and pneumatic products is of a secondary nature in relation to the demand for ready-made machinery and equipment; the size of that demand depends on the number of presently operated machines and equipment units. In the marketing science this phenomenon is called „*Derived industrial demand chain*", demand for a more processed product – closer to a consumption-ready product, it produces the demand for products of a lower degree of processing (Fig.).

The demand for components constitutes a derivative of the demand for machinery and consumption, being mainly manufacturing means in the process of broadly understood consumer goods. The demand for research and development work as well as the education of personnel constitutes the derivative of the demand for hydraulic and pneumatic products. One can state, in a certain simplification, that is the second derivative of the demand for ready-made machinery and equipment, and the third-order derivative in relation to the general economic situation and the investment process in particular.

Each stage of the industrial demand chain (investment goods) produces the demand for manufacturing means, first of all, the demand for consumer goods created by the people who are employed in companies, and their families. Hence, the issues of demand and supply, of the components such as fluid power components and assemblies, and systems should be always considered in the context of the economic development and its dynamics, e.g. as expressed by the Gross Domestic Product value and its variations as well as the level of technology in the given country, area or sector. This is of utmost important since the components used in various branches of the machine building industry have to be matched to their specificity and requirements.

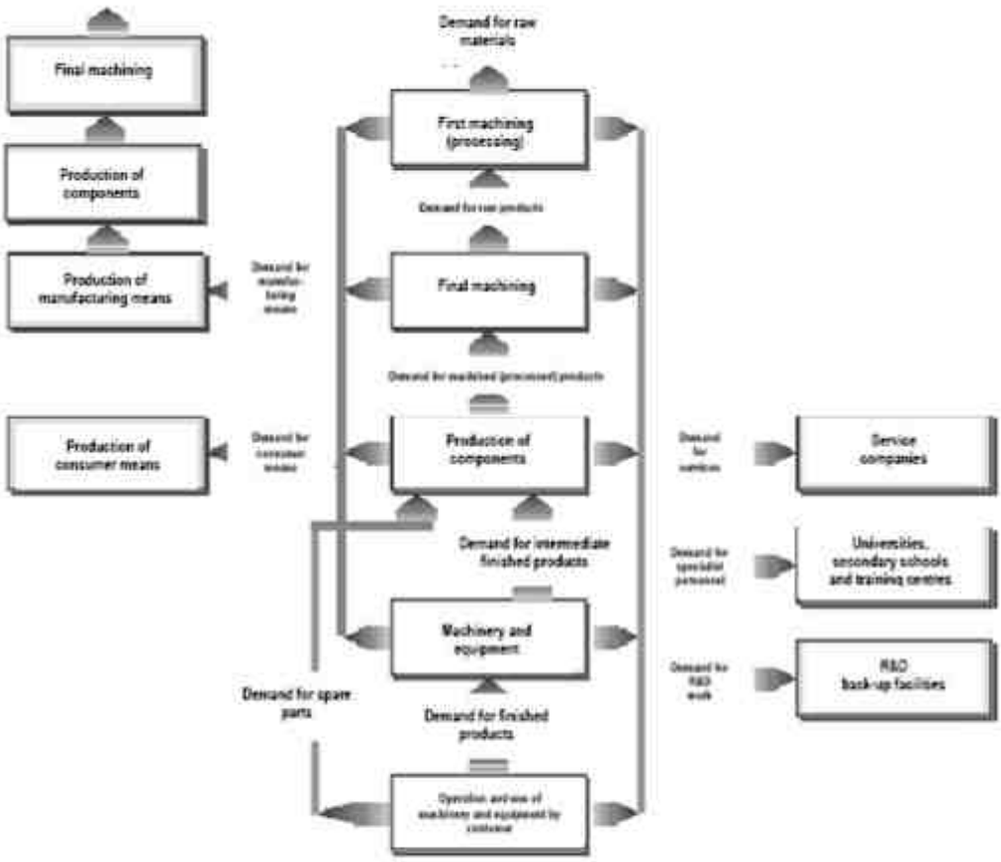

Fig.1. Industrial demand – the notion of the demand chain

1. MACHINERY BUILDING INDUSTRY – IN EUROPE AND WORLD-WIDE

The machine building and electro-mechanical industries of the EU member-countries is an important, since at 45%, shareholder in the global market. More than 156,000 companies employ ca. 3.2 million employees, the turnover in 2007 amounted to EUR 615 billion. Circa 31% of the production volume were exported outside the UE. A certain measure of the machine-building industry can be the number of the employed people therein per 1,000 inhabitants (Fig.).

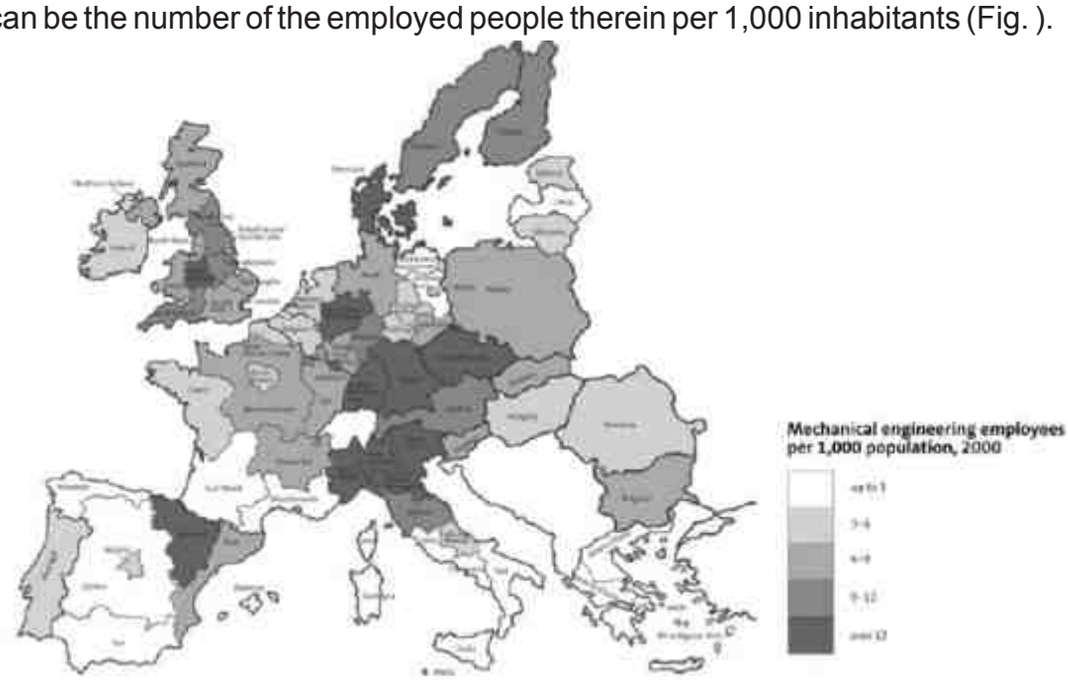

Fig.. The share of the employed people in the machine-building industry per 1,000 inhabitants and in the EU member-countries and regions in 2000 [1].

The share in the sale value (turnover) of the individual EU member-countries, which amounted to EUR 636 billion in 2008, is shown in Fig. . It is evident that the turnover values of the first trio: Germany, Italy and France constitute 2/3 of the European market turnover value.

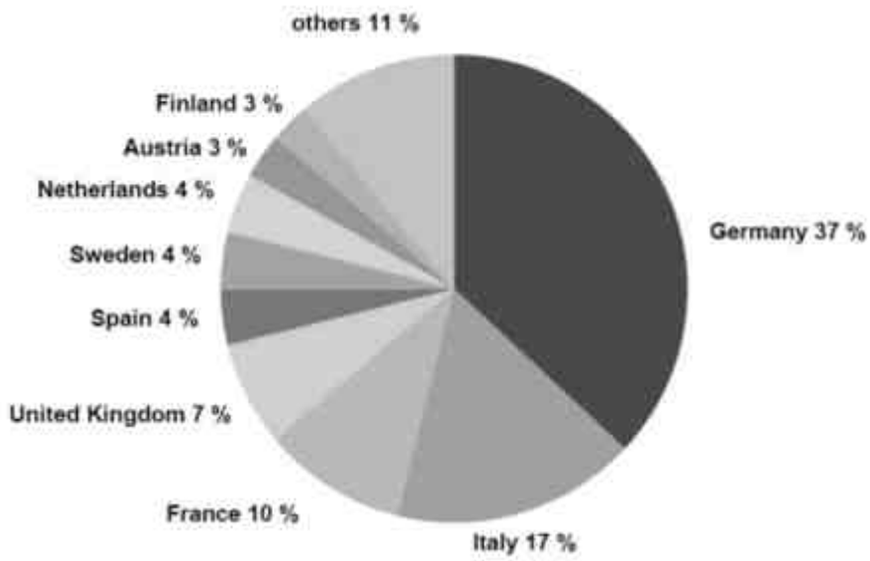

Fig.. The share of the individual EU member-countries in the machine-building industry turnover in 2008 – EUR 636 billion [1].

To make a comparison, Fig. 4 shows the 10 major players of the machine-building industry market, by comparing, simultaneously, the dynamics of their sale turnover values. The comparison of 2008 vs. 2005 for China: +122% and Russia: +108% seems comprehensible, on the other hand, the negative values for USA: -10% and Japan: -8% can be explained by the transfer of those economies towards „high technology".

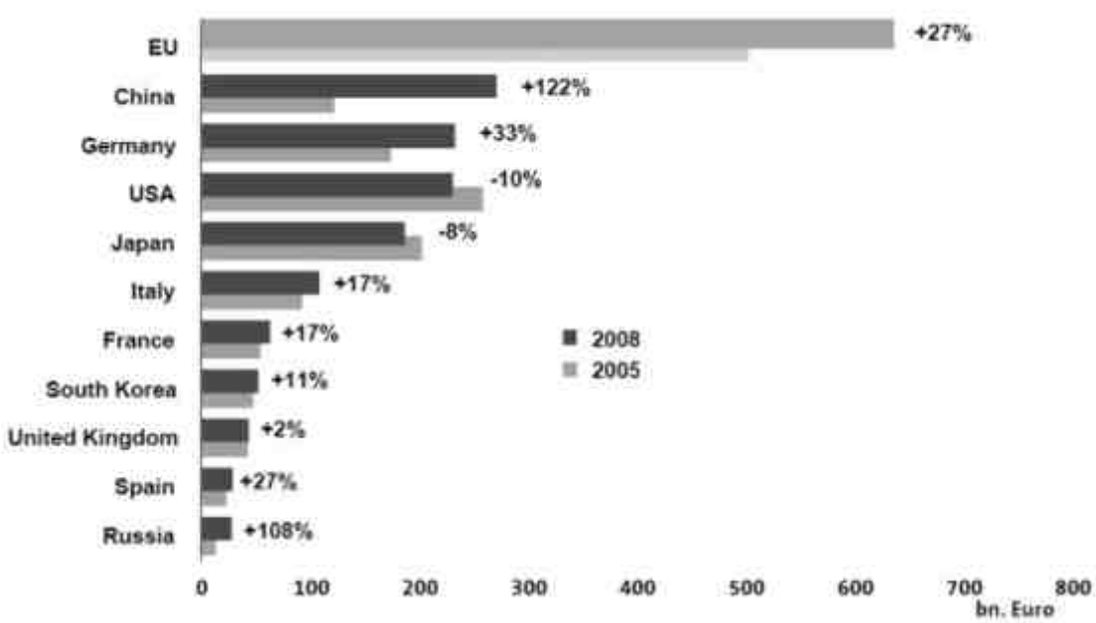

Fig.. Main shareholders in the machine-building industry market:
2008 – EUR 1,580 billion, 2005 – EUR 1,290 billion [1].

Table 1. Production of the machine-building industry in Poland in 2000-2008 [9,10].

Products	2000	2005	2007	2008
General-purpose passenger cars, thousands of units	532	540	695	842
Public conveyance vehicles, thousands of units	2.0	5.4	3.6	4.6
Sea ships:				
Units	34	28	18	14
Thousands of GT	611	722	517	485
Bicycles, thousands of units	1,320	1,528	1,125	1,054
Bearings, millions of pieces	130	222	231	224
Including ball bearings	84.5	162	165	163
Machinery for farming and forestry, thousands of units:				
Farming tractors	7.2	5.7	7.0	6.3
Plows	4.0	3.9	6.6	3.3
Field sowing-machines	1.3	2.0	2.7	3.8
Machine-tools for metals, span-cutting, thousands of units	8.1	-	3.7	4.0
Including lathes for metal removal	0.7	1.0	1.0	1.1
Household refrigerators & freezers, thousands of units	693	1,674	2,305	2,255
Household automatic wash machines, thousands of units	476	1,447	1,900	2,500
Household vacuum cleaners, thousands of units	1,674	1,315	1,358	1,215
Household gas cookers with an oven, thousands of units	161	775	875	1,045
Electric motors and generators, thousands of units	4,173	6,660	11,324	12,051

Table 1 demonstrates the data about the production of more significant products of the Polish machine-building industry in 2000-2008. The clear growth in the production mainly applies to products in which the export share is very high, e.g. passenger cars: 97%, refrigerators and automatic wash machines, gas cookers: above 80%. In those area a collapse of the business conjuncture is evident although this depends on the market segment. The crisis did not impair, on the contrary, it helped, for instance, the manufacturers of low-powered passenger cars.

The main objective of this paper is to show the change occurring in the machine-building industry market produced by - here the proper variant should be selected - economy slowdown, recession or crisis.

The growth in the production and sales of machinery and equipment in the last decade changed dynamically, whereby its second half is characterized by a permanent rise in the turnover (Fig.5).

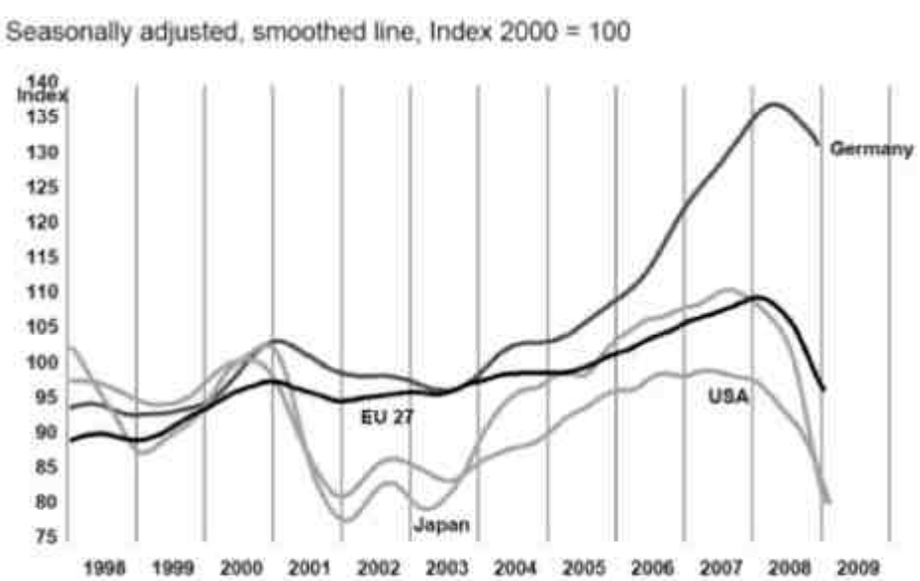

Fig.5. Growth in the production of the machine-building industry in EU, Germany, USA and Japan [1].

Therefore the collapse of the economic conjuncture on the turn of 2008 and 2009 should not astonish – the more so as we know the grounds for that fall. A good explanation of those phenomena can be the course of the economic growth variations as shown in Fig. (GDP) and the rise in the turnover of the machine-building industry. It is easily noticeable that the drop in GDP below +2% means the negative values of the growth in the turnover on the machinery and equipment market.

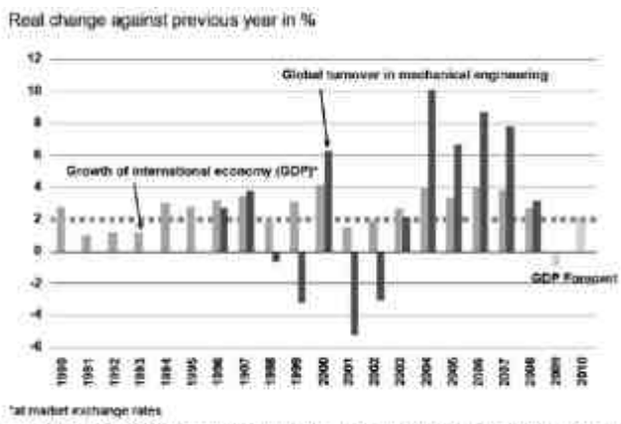

Fig 6. Growth of the global economy vs. turnover values on the machinery and equipment market [1].

The dynamics of the machinery and equipment sales in the West-European countries, USA, China and Japan is presented in Fig. . Only in the case of the forecast 2009 (2009 vs. 2008), we have to deal with a positive value - this is, obviously, China.

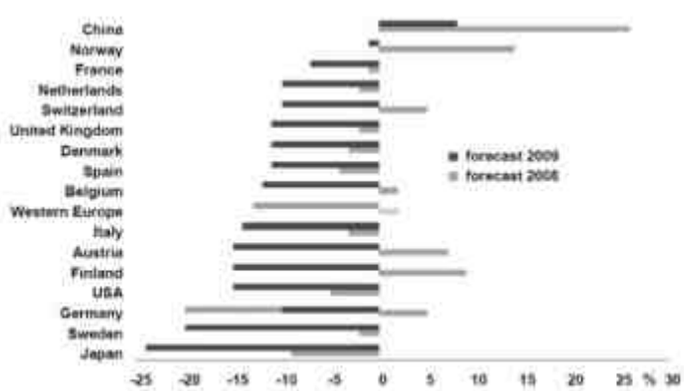

Fig 7. Forecasts of the rise in the turnover values on the machinery and equipment market in the West-European countries, USA, China and Japan [1].

The data about the rise in the GDP in several selected countries and regions (Fig.) are very interesting. Here, the coupling with the data as show in Fig. is evident. Only China, India and Middle-East countries can boast about a positive GDP increment. It should emphasized at this place that the GDP growth in Poland in the 1st Quarter 2009 amounted to +0.2%.

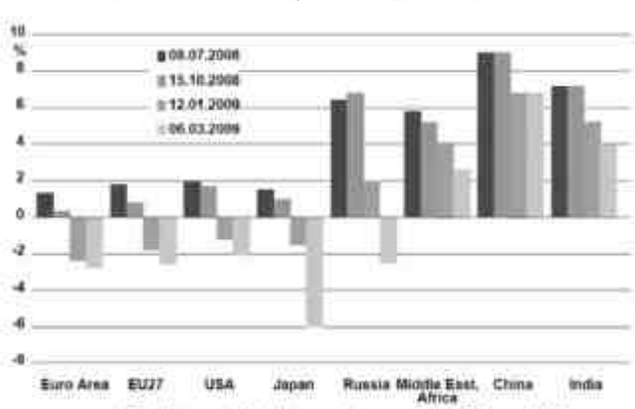

Fig 8. International imbalance – forecasts of the GDP growth [1].

1. SITUATION IN THE SELECTED SECTORS OF THE MACHINE-BUILDING INDUSTRY

The demand for the hydraulic and pneumatic components is tightly inter-related with the development of individual branches (sectors) of the machine and equipment-building industry. It is worth comparing Figures 9 and 10 each other in which the relations of orders in 2008 vs. 2007 and 2009 vs. 2008 in the 15 most important sectors of Germany's machine-building industry are presented. The last two lines specify the data for hydraulics and pneumatics. The information presented is highly important if it is noticed that the turnover values of the German machinery and equipment market constitute more than one third of the EU market.

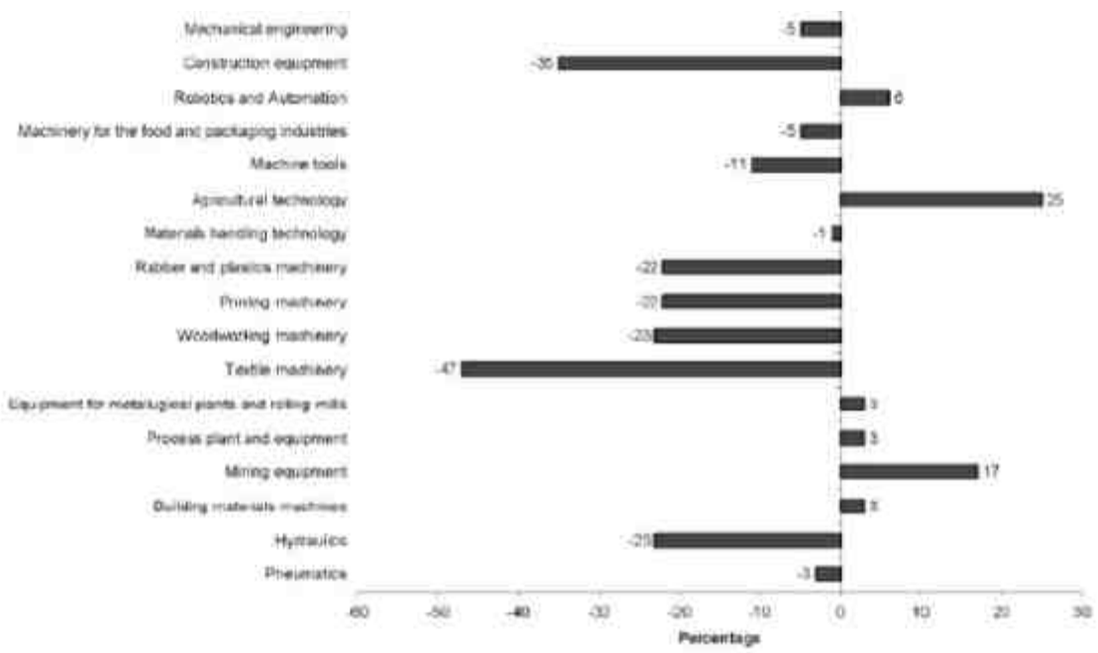

Fig.9. Rise in the number of orders in 2008 vs. 2007 in selected Germany's machine-building sectors [2].

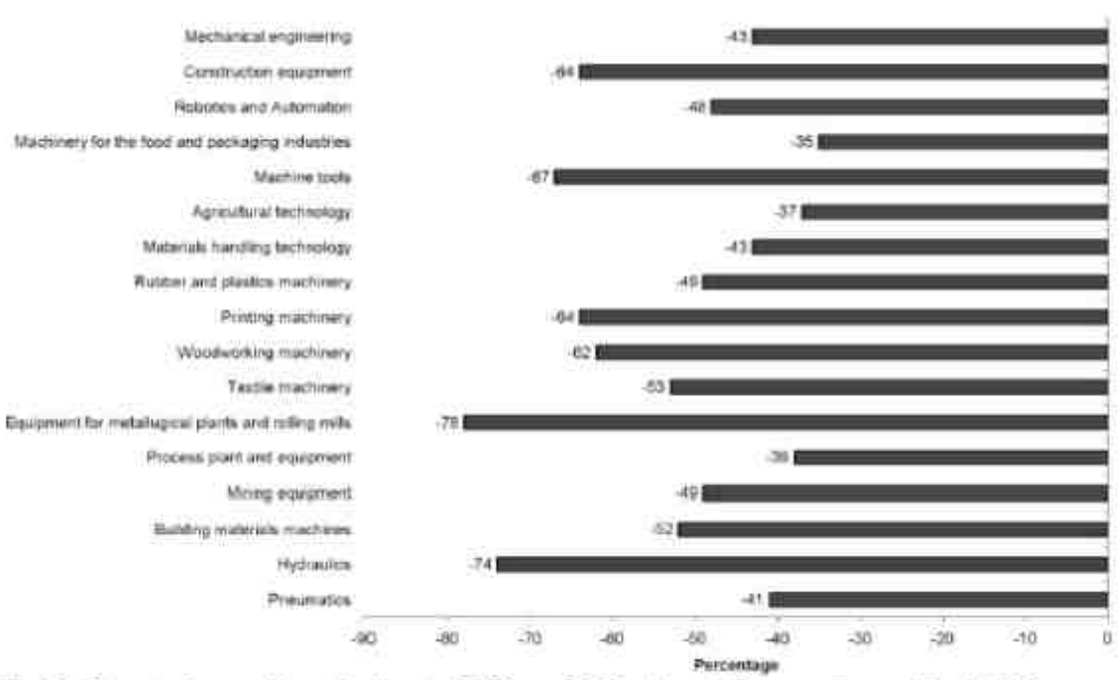

Fig.10. Rise in the number of orders in 2009 vs. 2008 selected Germany's machine-building sectors [2].

The trends on the US market of cars/vehicles as well as construction and farming machinery, and in the time period of January 2005 to January 2009, are presented in Figures and , respectively. The closer study of the quarterly data shows the seasonal nature on those apparently so different markets. Obviously, the present-day crisis is well evident here.

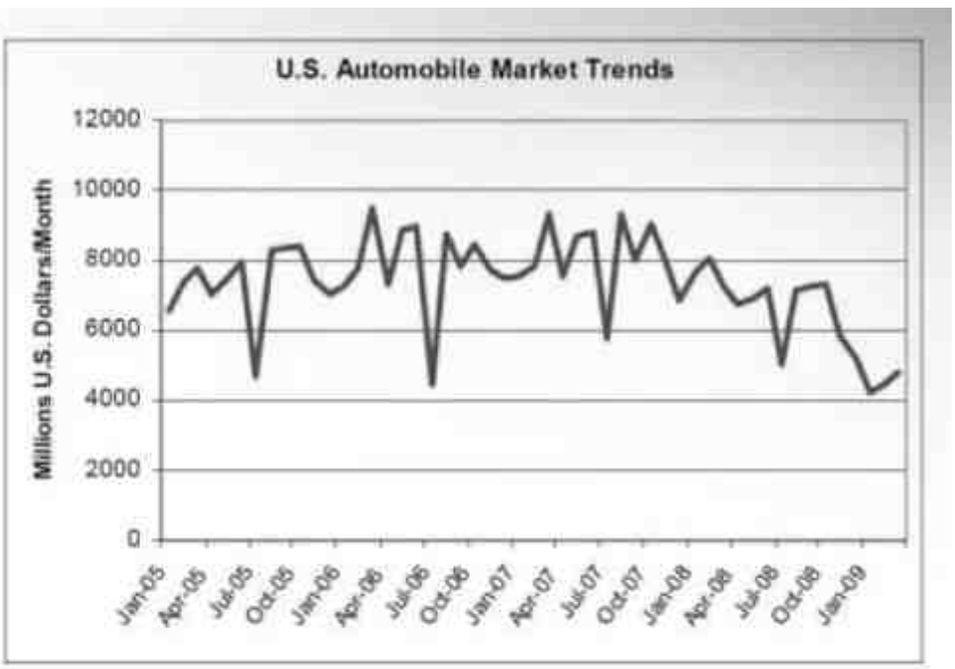

Fig.11. Turnover values of the car/vehicle market in the USA [3].

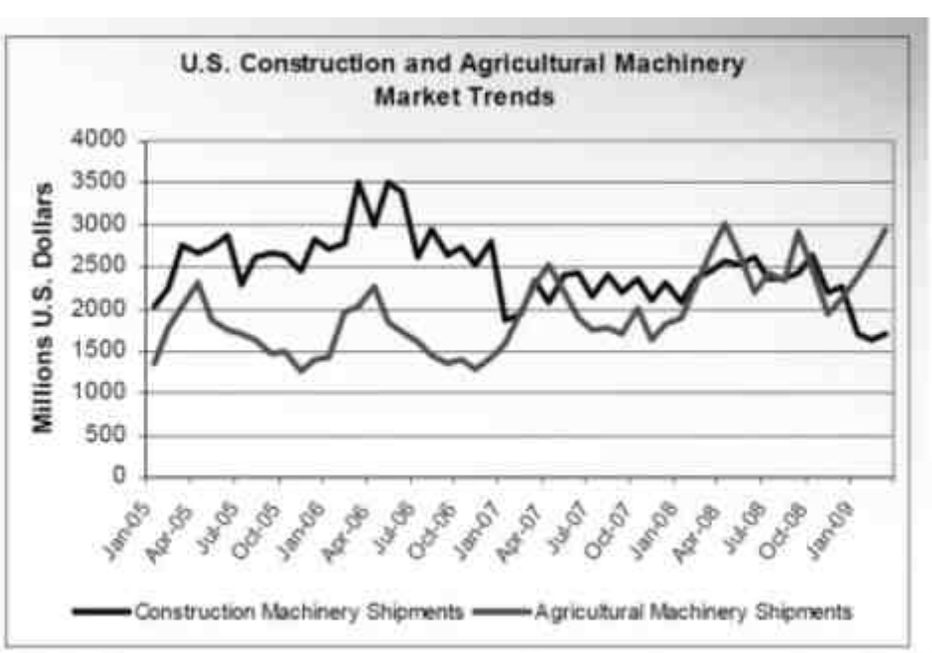

Fig.12. Turnover values on the construction and farming machinery market in the USA [3].

The trends on the Japanese market of machine-tools, i.e. machines to produce machines, are depicted in Fig. . Here, the domestic orders and the export orders, and the corresponding growth dynamics indexes, have been discriminated.

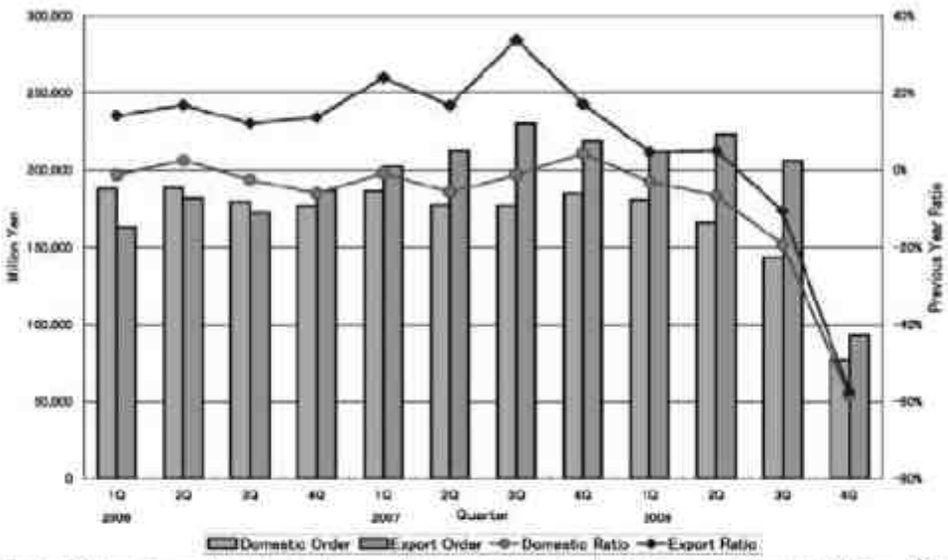

Fig.13. Orders for machines to produce machines – machine-tools in Japan, 1st Quarter 2006 vs. 4th Quarter 2008 [4].

1. FLUID TECHNOLOGY MARKET – WORLD-WIDE AND IN EUROPE

Over the last decade, the market of products and services has developed and essential changes in the shares have occurred on it. The hydraulic market turnover has increased by almost 35% and reached the value of EUR 22 billion (Fig.). Also the shares held by the major participants in that market have changed: the Chinese share has increased above 7 times while the countries associated within CETOP are the leader on that market. In that time period, the turnover of the pneumatics market has changed by 5% only, however, there has followed the diametric change in the major shareholders. The Chinese share in the pneumatics market has risen almost 15 times. The shares of USA and Japan has decreased considerably, this follows, however, from the transfer towards more advanced technologies and the move of machinery and equipment to other countries (Fig.15).

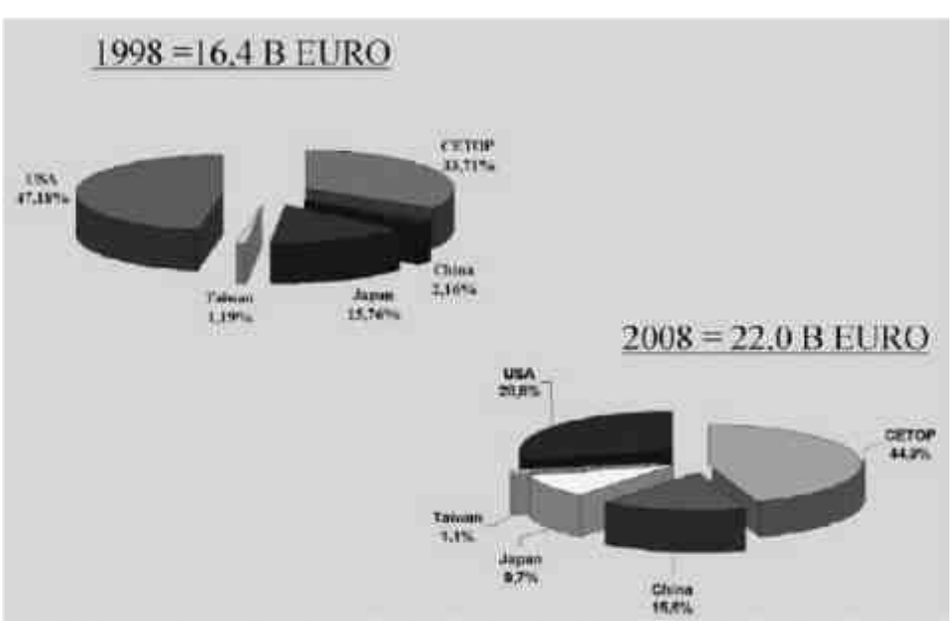

Fig.14. Development of the machine hydraulics market and its major shareholders [5].

To make a comparison, the turnover value on the market of machine hydraulics constitutes ca. 7% of Poland's GDP and 16-18% of the sale value of the global electronics market

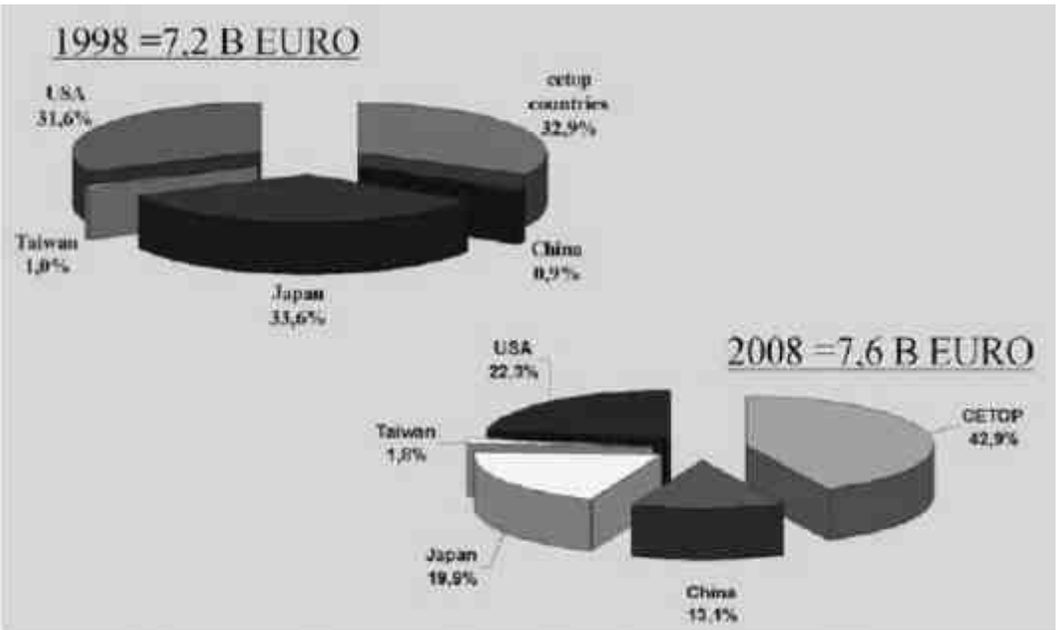

Fig.15. Growth of the pneumatics market and its major shareholders [5].

Default Paragraph Font;Styl Tekst podstawowy wcięty + 12 pt Wyjustowany Pierwszy wiersz...;Body Text Indent;The CETOP, European Fluid Power Committee, member-countries prevail on the European market. 18 associations of manufacturers, distributors, academic/university centres from 17 countries belong to CETOP. In June 2009, an organization from the fluid technology branch in the Russian Federation was granted the CETOP membership. Here, it is worth reviewing the economic potential and R&D capacities in the 17 CETOP member-countries (Table). In 2007, ca. 550 million people in total were living in those countries and the average GDP per inhabitant (in current prices) was almost 3 times higher than in Poland.

Table 2. Selected macroeconomic data about the CETOP member-countries in 2007 [9,10]

Country	Population (millions)	GDP per inhabitant (in current prices, thousands of USD)	R&D expenditures related to GDP, %*	R&D workers per 1,000 employees*	Expenditures per R&D worker (thousands of USD)*
Belgium	10,597	42,624	1.8	7.9	117,337
Czech Republic	10,302	16,881	1.5	5.2	73,102
Finland	5,286	46,266	3.5	16.5	102,053
France	61,709	40,738	2.1	8.2**	117,199
Spain	45,321	32,021	1.2	5.8	82,527
Holland	16,371	46,762	1.7	5.5	105,176
Germany	82,249	40,327	2.5	7.2	136,337
Norway	4,702	82,536	1.5	9.2**	116,119
Poland	**38,116**	11,141	0.6**	4.5	41,037
Romania	21,549	7,523	0.5	2.2	34,634
Slovenia	2,011	22,741	1.6	6.1	80,297
Switzerland	7,607	56,579	***	***	143,022
Sweden	9,142	49,662	3.7	12.6	150,102
Turkey	73,884	65,11	0.8	1.9	89,701
United Kingdom	60,863	45,587	1.8	5.8	106,341
Italy	59,051	35,430	1.1**	3.4	101,724
Russia	141,378	9,050	1.1	6.7	21,991

* - Data from 2006; ** - Applicable to 2005; *** - No data

The information about the share of the individual countries associated within CETOP in the hydraulics and pneumatics markets in 2008 is presented in Figures and . Those data comprise the so-called domestic sales – this means the own production for the own domestic market plus the import volume

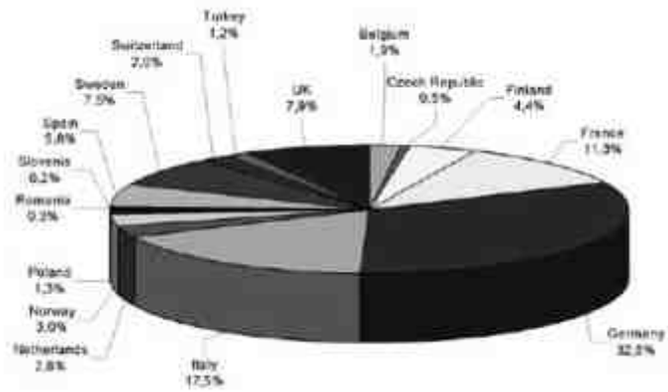

Fig.16. Share of the countries associated within CETOP in the hydraulics market of the domestic sale value in 2008 of EUR 9.9 billion [5].

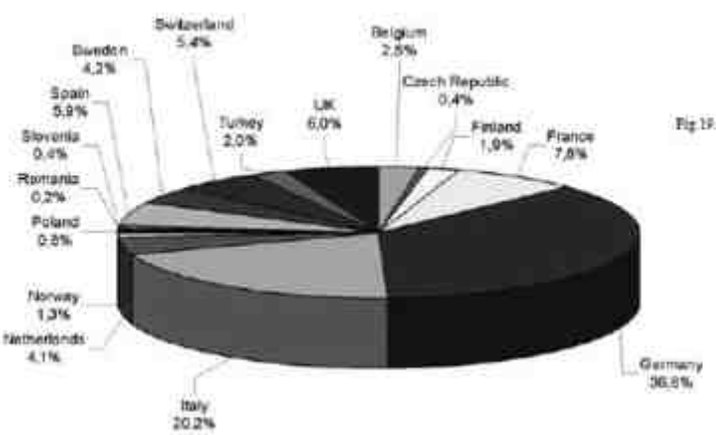

Fig17.. Share of the countries associated within CETOP in the pneumatics market of the domestic sale value in 2008 of EUR 3.3 billion [5].

5. DYNAMICS OF THE MAJOR SHAREHOLDERS ON THE FLUID TECHNOLOGY MARKET

The market of fluid technology products and services, as the components market, constitute a derivative of the final products market – ready-made machinery and equipment. Figures to present, in a different form, the turnover values of the hydraulics and pneumatics components over the last few years in Germany, USA, Japan and China, thus the major players on that market.

The study of those data clearly bear testimony about the present-day opportunities and trends. At this place, a reservation should be made that there are no data about a very dynamic shareholder in that market – India.

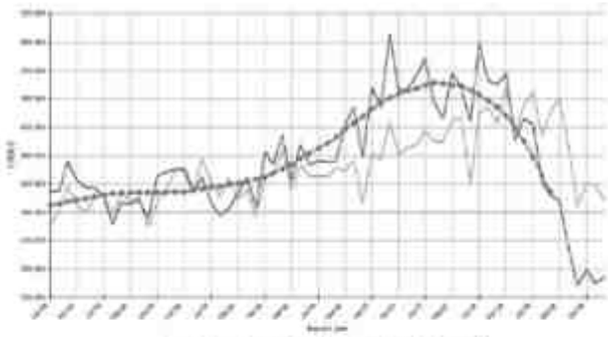

Fig.18. Sales and new orders for the hydraulics products in Germany, time period of January 2004 to March 2009 [2].

Fig.19. Sales and new orders for the pneumatics products in Germany, time period of January 2004 to March 2009 [2].

Fig.20. Index of supplies of mobile and industrial hydraulics in the USA, time period of January 2001 to March 2009 [3].

Fig.21. Index of supplies of pneumatics in the USA, time period of January 2001 to March 2009 [3].

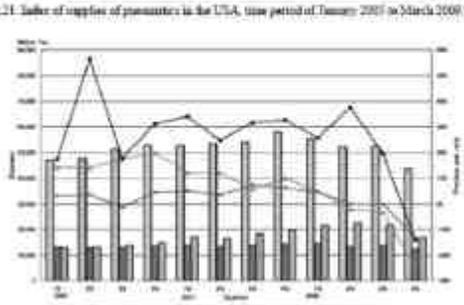

Fig.22. Trends on the hydraulics market in Japan, 2006 to 2008 [4].

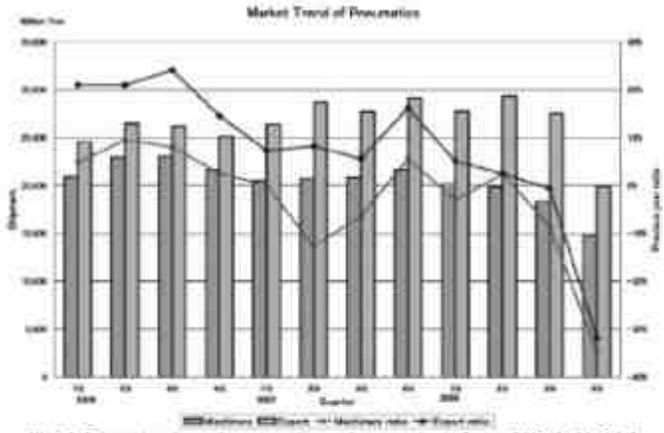

Fig.23. Domestic sales and export volume of pneumatics in Japan, 2006 do 2008 [4].

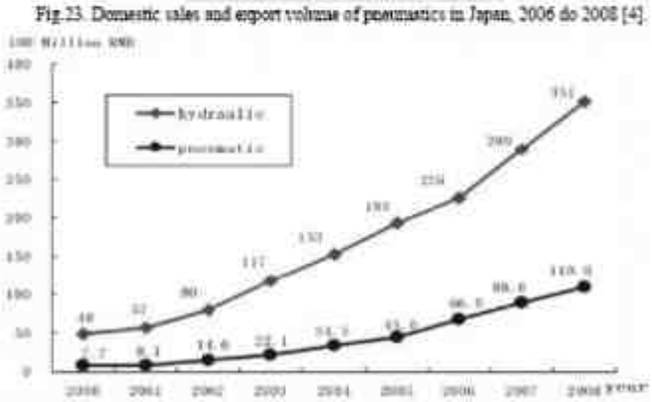

Fig.24. Growth of the fluid technology market in China, 2000 to 2008 [6].

Default Paragraph Font;Styl Tekst podstawowy wcięty + 12 pt Wyjustowany Pierwszy wiersz...;Body Text Indent;

1. DYNAMICS OF SALES AND ORDERS ON THE FLUID TECHNOLOGY MARKET

Beside the data about the sales of hydraulics and pneumatics products and services in the individual years on the domestic markets, the information on the prevailing trends is very essential. In agreement between CETOP and ISC Area Fluid Power, such data are collected, on a quarterly basis, in companies and institutions dealing with the production, maintenance/service, trade, research and training. Upon processing in the national organizations, that information is conveyed to CETOP and, afterwards, it is made available as collective information – to member-countries that, in turn, transfer it directly to companies and institutions.

Presented below are such data showing big dynamic – turbulence-like - changes on the machine hydraulics and pneumatics markets (Figures 25 to 29).

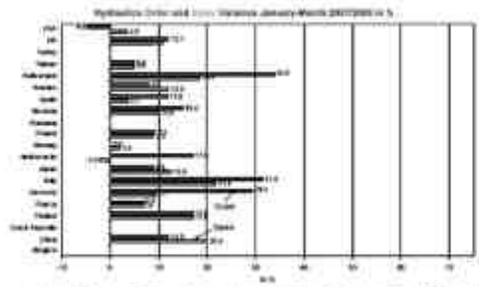

Fig.25. Dynamics of sales and orders for hydraulics products, January to March 2007 vs. 2006 on domestic markets, % [7].

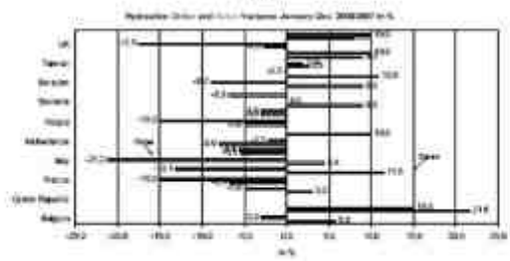

Fig.26. Dynamics of sales and orders for hydraulics products, January to December 2008 vs. 2007 on domestic markets, % [7].

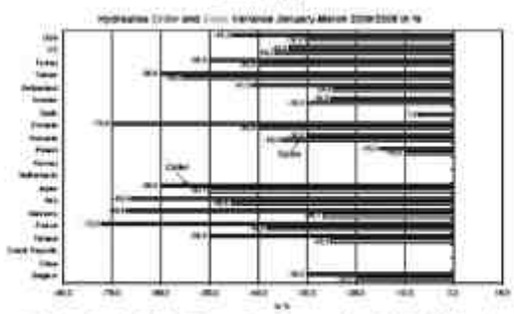

Fig.27. Dynamic of sales and orders for hydraulics products January to March 2009 vs. 2008 on domestic markets, % [7].

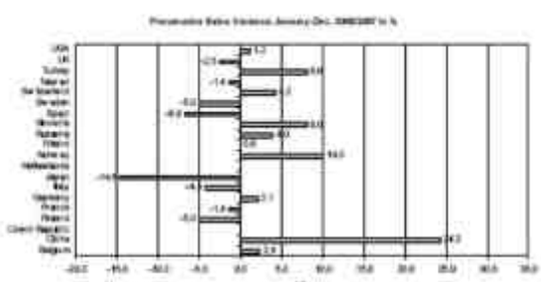

Fig.28. Dynamics of sales and orders for pneumatics products, 2008 vs. 2007 on domestic markets, % [7].

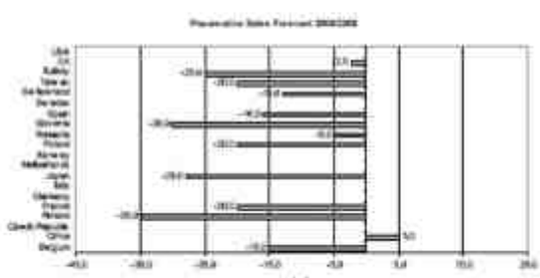

Fig.29. Forecast of the sale dynamics of pneumatics products, 2009 vs. 2008, % [7].

1. SUMMARY

The presented information about the machinery and equipment market, in particular about the hydraulics and pneumatics market, is the result of actions taken by the national organizations associated within CETOP and agreements made under the International Statistic Committee Area Fluid Power. The considerable part of the information originates from the International Fluid Power Summit Meeting held on 21 April 2009 at the Hannover Fair.

It seems that the study of that data is possible from various points of view, depending on the place and situation of the interested party. In each case, for sure, it is useful since it tells us about the past and something about the present-day. As regards the future, it is good to be aware that fluid technology plays an ancillary role in final products. Therefore we will be able to operate well on the hydraulics market only when we have learnt our own position and the opportunities of the other participants in that market.

REFERENCES

[1] Wiechers R.: EU Mechanical Engineering 2009. Broken Thread. VDMA International Fluid Power Summit Hannower Messe Industrie, 21 April 2009.
[2] Kienzle H.Ch.: Economic situation of the German Fluid Power Industry. VDMA International Fluid Power Summit Hannower Messe Industrie, 21 April 2009.
[3] U.S. Economic Trends and Fluid Power Production. National Fluid Power Association, May 2009.
[4] Fluid Power Industry in Japan. Japan Fluid Power Association. Fluid Power Summit Hannower Messe Industrie, 21 April 2009.
[5] Bolzani A.: Global Fluid Power 1998-2008. ISC Area Fluid Power. International Fluid Power Summit Hannower Messe Industrie, 21 April 2009.
[6] Market Prospect of Fluid Power Industry in China. China Hydraulics, Pneumatics and Seals Association. International Fluid Power Summit Hannower Messe Industrie, 21 April 2009.
[7] CETOP and ISC area Fluid Power Home Consumptions. CETOP 09.10.2007, 02.03.2008, 22.05.2009, 14.07.2009.
[8] Economic Magazine. Polish Market No 7(156) 2009.
[9] Statistical Yearbook of Poland 2008. Central Statistical Office, Warsaw 2008.
[10] Concise Statistical Yearbook of Poland 2009. Central Statistical Office, Warsaw 2009.

SIMULATION OF DYNAMIC PHENOMENA IN HYDRAULIC PROP FOR WALL LINING

SIMULAREA FENOMENELOR DINAMICE INTR-UN REAZEM HIDRAULIC FOLOSIT LA CAPTUSEALA(IZOLAREA) PERETILOR

Zygmunt Domaga³a, PhD Eng., Wroc³aw University of Technology, zygmunt.domagala@pwr.wroc.pl,
Krzysztof Kedzia, PhD Eng., Wroclaw University of Technology, krzysztof.kedzia@pwr.wroc.pl
Jaros³aw Prokopowicz, MSc. Eng, Wroc³aw University of Technology, jaroslaw.prokopowicz@pwr.wroc.pl,
Zygmunt Popczyk, PhD Eng., Wroc³aw University of Technology, zygmunt.popczyk@pwr.wroc.pl

Abstract
A hydraulic prop is a basic element of mechanical wall lining systems. The technical parameters of hydraulic props and valves are critical for the protection of headings in mines, especially during earth tremors. This paper presents an analytical method for the evaluation of the dynamic performance of hydraulic props with valves. The calculation results were compared with dynamic load test results and were found to be in good agreement with the latter. The proposed method can be particularly useful to designers and users for the preliminary evaluation of hydraulic props.

1. Introduction

Mechanical wall lining systems used in earth tremor hazard conditions should be able to carry dynamic loads. Because of its very short duration and the fact that it is difficult to predict where it will occur it is not sufficiently well understood how an earth tremor acts on the lining. It is assumed that an earth tremor is comparable to a mass impact roughly equal to the propping strength of the lining.

The lining's main propping element is a hydraulic prop working together with hydraulic valves: a working valve and a release valve.

The suitability of a prop & release valve unit for work under dynamic loads is assessed through tests on special stands subjected to mass impact. The Central Institute of Mining has such a test stand on which hydraulic props (cylinder diameter up to 0.32 m) with valves can be fully tested using an impact mass of up to 30 tons and a maximum impact energy of 6*106J. A schematic of the test stand is shown in fig. 1. The test consists in impact loading (at different impact energies) a hydraulic prop and recording selected parameters such as pressure, displacement and stress.
Because of the high costs of such tests and the technical difficulties involved in carrying them out there has been an increased interest in analytical methods. This paper presents an analytical method, based on a discrete mathematical model, for determining the loads of a hydraulic prop subjected to dynamic loading.

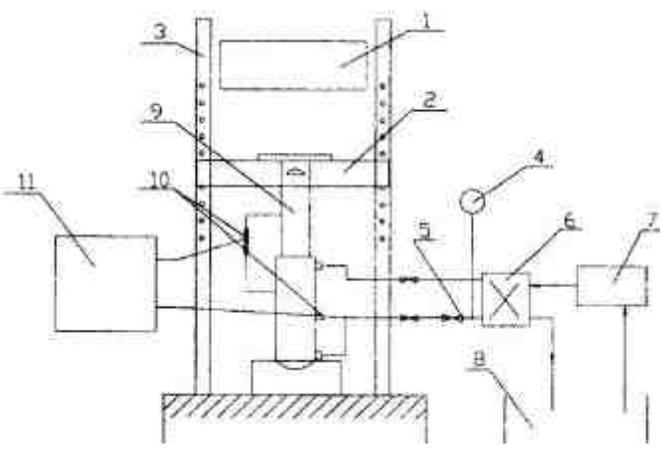

Fig. 1. Schema of pile-driver test stand with instrumentation: 1 – impact mass, 2 – crossbeam, 3 – guides, 4 – manometer, 5 cut-off valve, 6 – circulation switch, 7 – positive-displacement pump, 8 – fluid tank, 9 – tested prop, 10 – measuring transducers, 11 – measuring-recording equipment.

2. Mathematical model

The mathematical model was built assuming a discrete distribution of mass and elasticity and taking into account the limitations of the MATLAB-Simulink program used for the calculations.

2.1. Simplifying assumptions

The mathematical model was based on simplifying assumptions representing the actual object with the required accuracy.

The following simplifying assumptions were made for the release valve:

? draining side pressure p_{zl}, =const.;
? the fluid's density, viscosity and elasticity modulus do not change during system operation;
? the effect of gravity on the slide in the valve is neglected;
? no dry friction occurs between the moving surfaces;
? no cavitation occurs in the valve,
? the deformation of hydraulic conduits and components is neglected;
? the effect of finite disturbance propagation velocity is neglected;
? surface areas A_1 and A_2 are assumed to be flat;
? motion constraints are imposed on the servomotor's piston in a range of 0 y y_{gr};
? motion constraints are imposed on the valve slide in a range of 0 x x_{gr}.

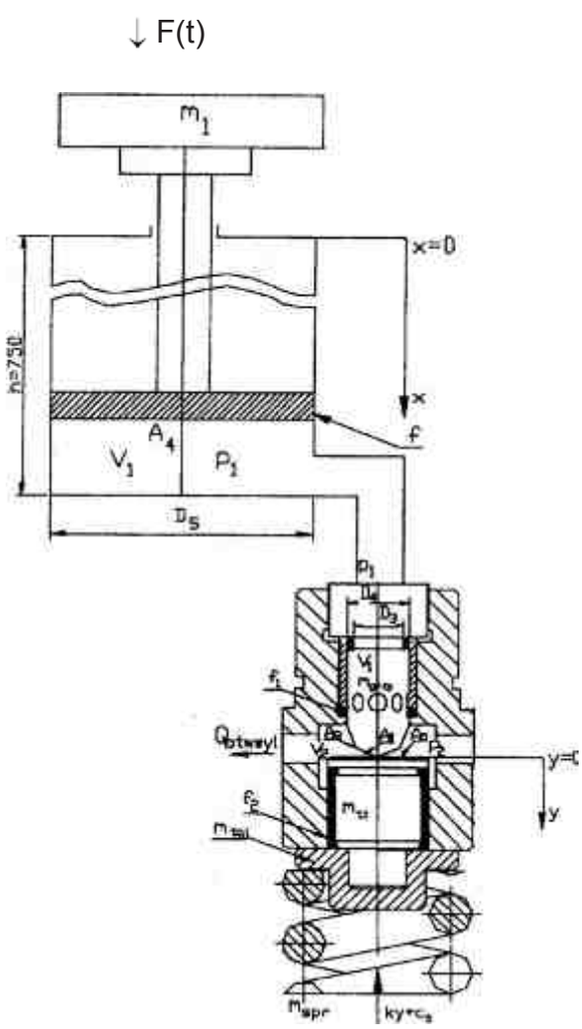

Fig. 2. Schema of hydraulic prop-release valve system used for calculations.

2.2. Mathematical equations describing adopted model

The mathematical model was constructed for the schematic shown in fig. 2.

? The equation of the forces acting on the hydraulic prop:

$$F(t) - (m_{tło} + m_1)\frac{d^2x}{dt^2} - f\frac{dx}{dt} - p\,A_4 = 0 \qquad (1)$$

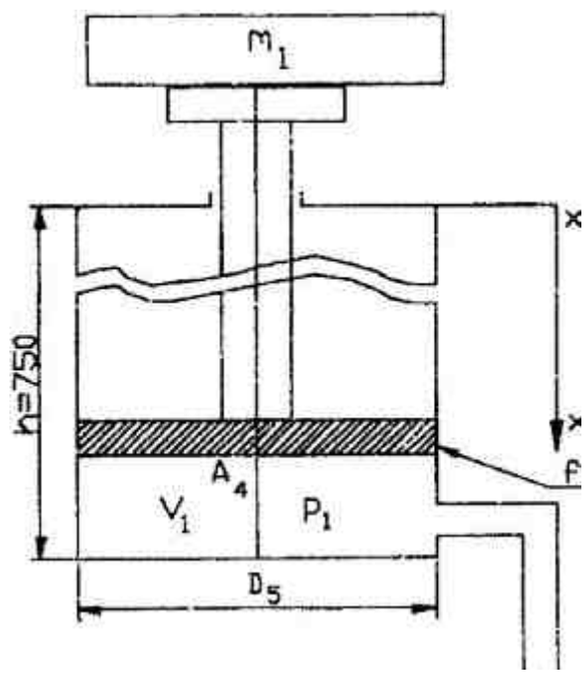

Fig. 3.Schema of hydraulic prop.

for $0<x<x_{gr}$

The initial conditions:

$$\frac{dx}{dt}(0) = 0$$

where F(t) according to K. Stoiński [ ]:

$$F(t) = \eta_d F_w + F_d\left[1 + k_d e^{-\alpha t}\sin(\omega t - \varphi)\right]$$

– the force loading the hydraulic prop,

$f\dfrac{dx}{dt}$ – the viscous friction force.

? The equation of the forces acting on the valve piston:

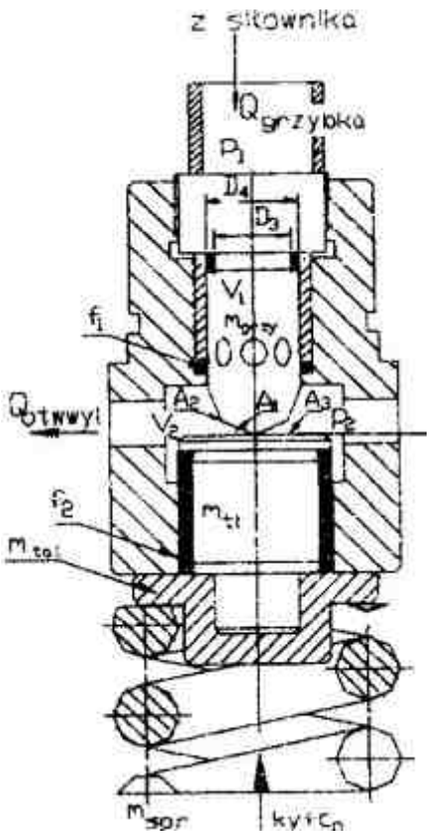

Fig. 4. Release valve.

$$p_1A_1 + p_2(A_3 - A_2) - p_2A_2 - M\frac{d^2y}{dt^2} - f_1\frac{dy}{dt} - f_2\frac{dy}{dt} + \quad (2)$$
$$-ky - c_o + \rho\frac{Q_{head}^2}{A_1} - \rho\frac{Q_{head}^2}{S_1}\cos\theta(x=0) = 0$$

for $0 \le y \le y_{gr}$

The initial conditions:

$$\frac{dy}{dt}(0) = 0$$

$$\mathrm{Re} = \frac{Q_{head}D_1}{2S_1\nu y}$$ – the Reynolds number.

? The equation of flow through the valve head:

$$A_4\frac{dx}{dt} - \frac{V_1}{B}\frac{dp_1}{dt} - A_1\frac{dx}{dt} + \quad (3)$$
$$-G_{head}\sqrt{|p_1 - p_2|}\,sign(p_1 - p_2) = 0$$

? The equation of flow through the chamber below the valve head:

$$G_{head}\sqrt{|p_1 - p_2|}\,sign(p_1 - p_2) +$$
$$-\frac{V_2}{B}\frac{dp_2}{dt} - (A_3 - A_2) - G_{otwwyl}\sqrt{|p_2|}\,\mathrm{sign}p_2 = 0 \quad (4)$$

3. Comparison of hydraulic prop test results with simulation results

The mass impact tests were carried out on the test stand shown in fig. 1 for a hydraulic prop (cylinder diameter – 0.2 m) with a single shock absorber and a spring-weighted release valve with a capacity of 1350 l/min. Hydraulic fluid pressure versus time for different impact energies was recorded.

For the above test conditions fluid pressure graphs were calculated from the relations presented in sect. 2.2. Exemplary experimental and calculation pressure graphs are shown in figs 5 and 6. It is apparent that there is very good agreement between the results. Even better agreement between the experimental and calculation graphs can obtained by making the mathematical model more specific. For this purpose one should:

? make the mathematical model of the servomotor more detailed,
? take into account leaks between the valve head and the chamber below it,
? take into account the fluid stream deviation-the hydrodynamic force relationship,
? make the loading force trace and value more precise,

include the technical parameters provided by the manufacturer's specifications in the release valve model.

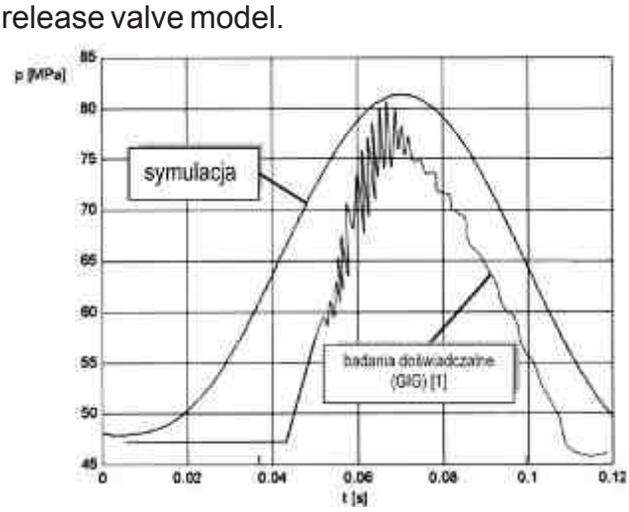

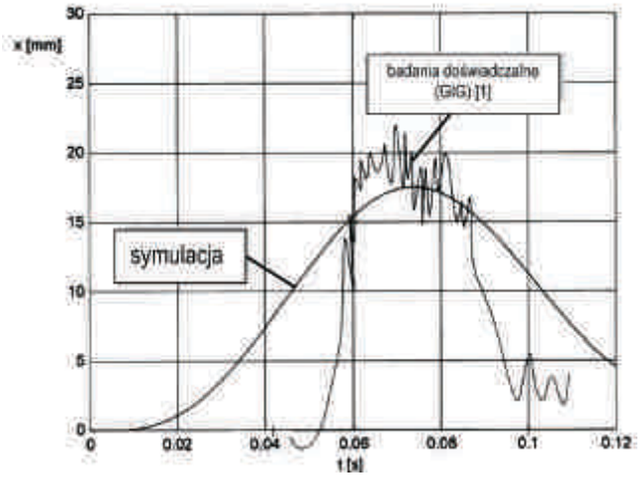

Fig. 6. Experimental and simulation research results.

4. Simulation results

The initial results of the simulations showed the mathematical model to be correct and allowing one to investigate wall lining in a wider parameter range than it would be possible on a test stand. Therefore a simulation plan was developed which included:

a) changing loading force F(t),

b) changing the loading crossbar weight from 2 to 100t,

c) changing the fluid compressibility modulus,

d) changing the (propping) pressure in the servomotor in a range of 28-60 MPa,

e) changing the initial piston rod extension from 0.15 to 0.5m.

Selected results of the simulations carried out according to the above plan are presented below.

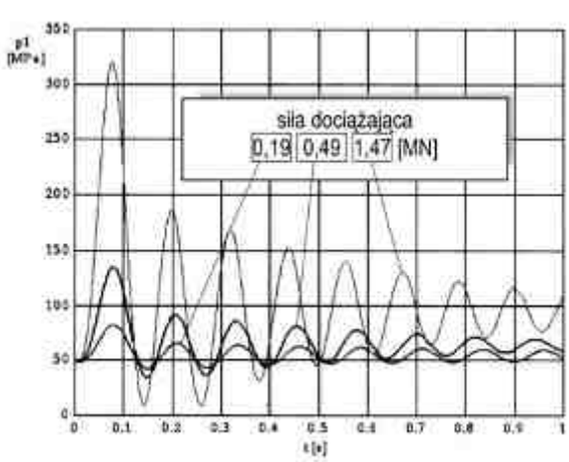

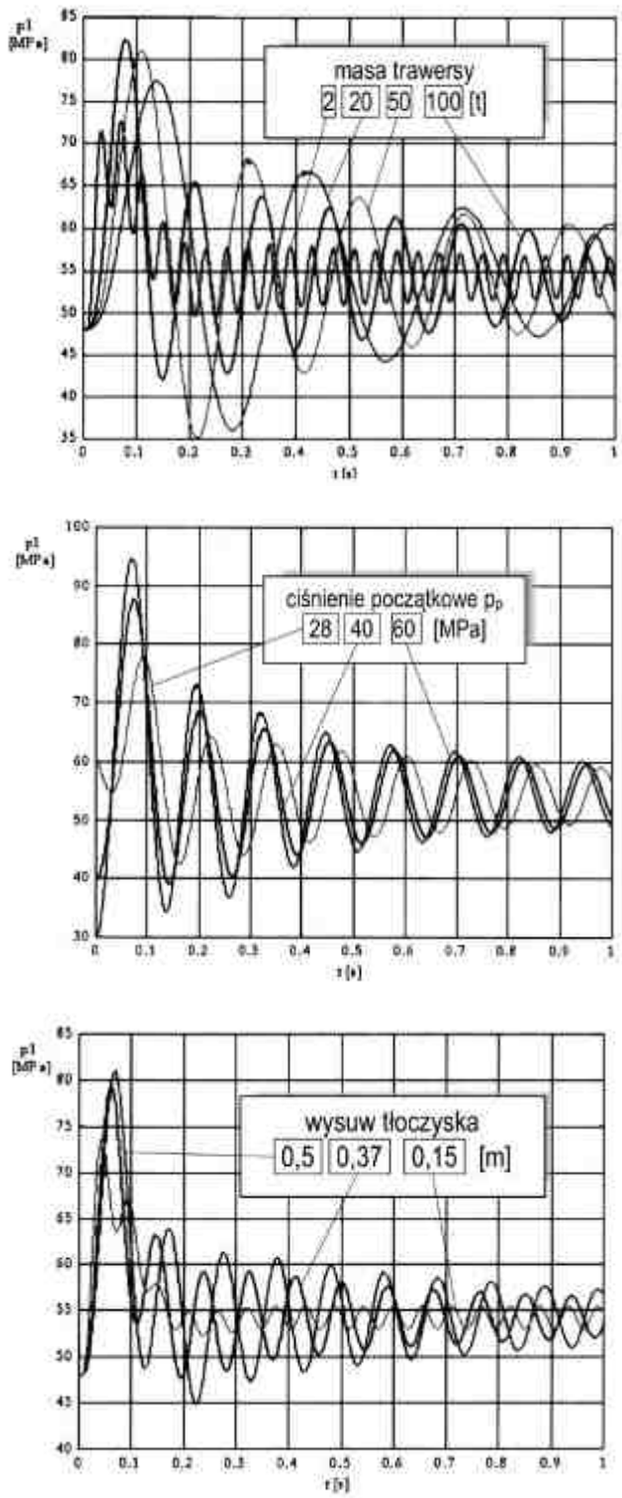

Fig. 7. Hydraulic prop pressure traces.

5. Conclusion

The proposed method of calculating dynamic loads in hydraulic props equipped with a release valve yields results which are in good agreement with the test results and it is much cheaper and convenient to use since no costly test stands need to be built. It can be used to assess the suitability of different hydraulic prop designs to carry dynamic loads in different service conditions. In order for the results of such calculations to be reliable, the adopted hydraulic prop and valve parameters should be based on the manufacturer's specifications.

The method should also be useful in the design of new linings and in matching hydraulic props to mining conditions.

References

[1] Stoiñski K.: Mine linings in earth tremor hazard conditions (in Polish), GIG, Katowice 2000.

[2] Palczak E.: Dynamics of hydraulic components and systems (in Polish), Zak³ad Narodowy im. Ossoliñskich, Wroc³aw, 1999.

[3] Tarnowski W.: Computer simulation system SIMULINK and introduction to MATLAB (in Polish), Koszalin, 1996.

[4] Stryczek S.: Hydraulic drives. Components and systems, WNT, Warsaw, 1984.

HYBRID DRIVE PROTOTYPES INVESTIGATED AT THE TECHNICAL UNIVERSITY OF ŁÓDŹ

PROTOTIPURI DE MOTOARE HIBRIDE STUDIATE LA UNVERSITATEA TEHNICA DIN ŁÓDŹ

Zbigniew PAWELSKI*

**Vehicle Research Institute Technical University of Łódź, 90-924 Łódź ul. Żeromskiego 116, tel. 48(42)6312392, fax. 48(42)6312398, e-mail: pawelski@p.lodz.pl.*

Abstarct: *In the work on the hybrid drive constructed at the Technical University of Łódź two conceptions of the hydrostatic drive are studied:*
- with the control through a change of the unit absorbing power of the engine taking the energy from an active-pressure system, i.e. 25-33 [MPa]. This system was applied in a prototype in which components of Rexroth make were used.
- with the control through the transmission in the hydrostatic drive in a sequential manner in the variable-speed and parallel power flow transmission, in which the hydrostatic transmission is a controllable branch.
The funadamental quantities subject to regulation are: the vehicle speed and the parameter determining the amount of energy accumulated in the accumulator. Thus, there are two regulators affecting the two quantities. In both prototypes the above-mentioned solutions to the control systems are under investigation.

1. PROTOTYPE OF HYBRID POWER TRANSMISSION SYSTEM

The prototype of hybrid power transmission system is mounted in city bus IKARUS 266, where following components of Rexroth products. Results, obtained during these tests concerned with control and action of energy accumulators, and observed effects can be fundamentals for further experiments of new solutions of hybrid power transmission system of microprocessor control.

Fot. 1. Ikarus 266 with hybrid system.

In introduced solution hydrostatic transmission was used as a power transmission system.
Combutsion engine and connected with it variable delivery pump, are a part of a power transmission with an intensitycoupling. This pump and high-pressure accumulators hold working pressure in range 20-33 [MPa] and create system with a active pressure. A governor, that is responsible for this part of the system, realizes steering: with a pump elementary volume and with a angular velocity of the combustion engine.
To making up leakages serves feed pump. This pump, together with low-pressure accomulators, has to hold in a suction line of the pump the pressure, that prevents the cavitation despite of variable oil demand.

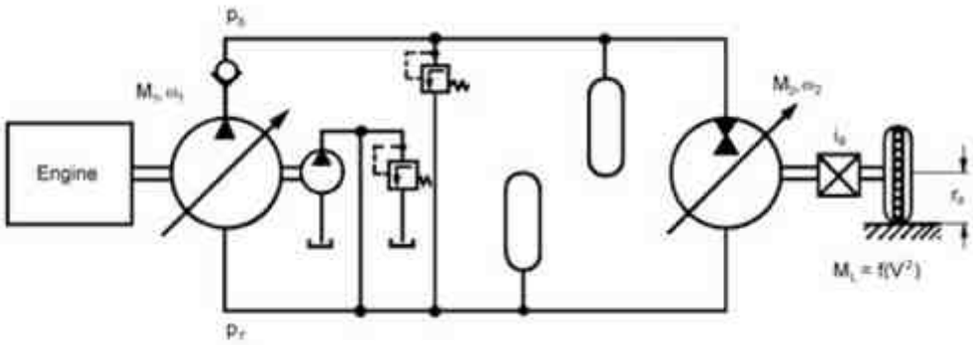

Fig.1. Power transmission system of hydrobus.

The two main tasks hydrostatic unit, installed on the live axle of the bus, is responsible for are: realization of movement of the vehicle and recovery of the energy from the braking proces. When the elementary absorptivity of the pump is changed, the output moment is adapted to the load conditions. But working as an engine a stream of oil is taken from the system, and working as a pump, during the braking process, such a stream is formed.

Entire dividing angular velocities: ? $_1$ - of the pump and ? $_2$ -of the engine, permits on separate optimization of work both: internal-combustion engine and hydrostatic machines, and by hte way higher efficiency is providet.

The task of the control system of the power transmission is providing set values for closed subordinated systems i.e.:

* combustion engine - angular velocity ? $_1$, Fig.2,
* pump - deflection angle of the disk, Fig.2,
* secondary unit - angular velocity ? $_2$, Fig.4.

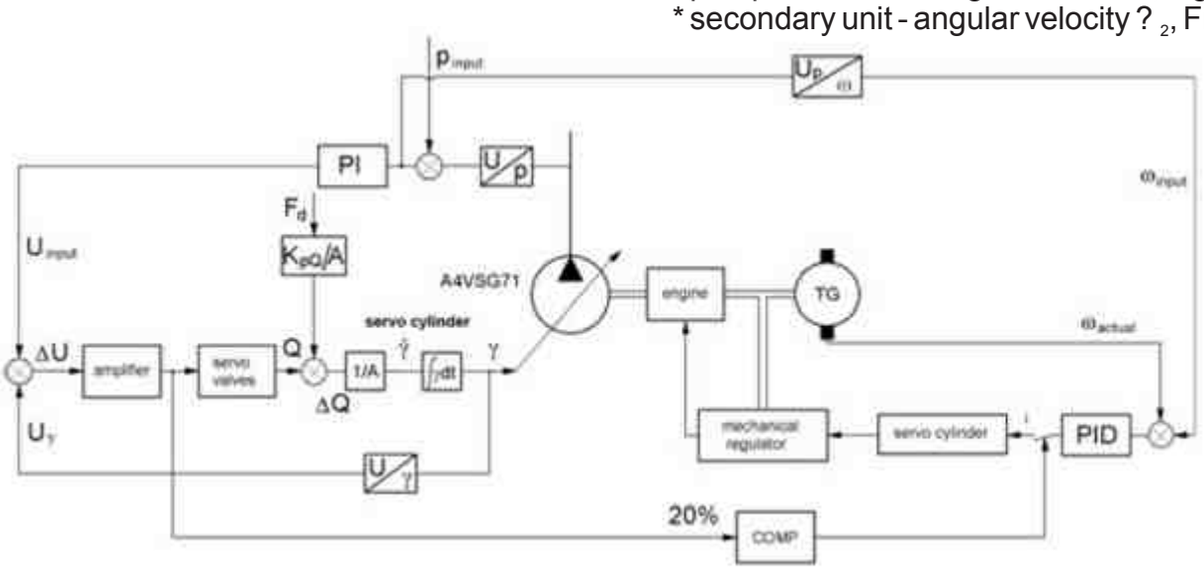

Fig.2. A schematic diagram of the control system of the capacity of the hydrostatic pump

In this solution changing of efficiency of the pump can be made by: changing its elementary volume and changing angular velocity. So projected microprocessor regulator, Fig.2, realizes following tasks:

* control of the elementary volume of the pump,
* control of the angular velocity of the combustion engine (speed governor).

After turning on the “accumulator charging” switch, the hydraulic servo-motor moves the slat of the injection pump and the servomechanism of the pump moves the keep plate in maximum position. After the given value of the pressure is reached, servos in injectionn and hydraulic pump are withdrawn.

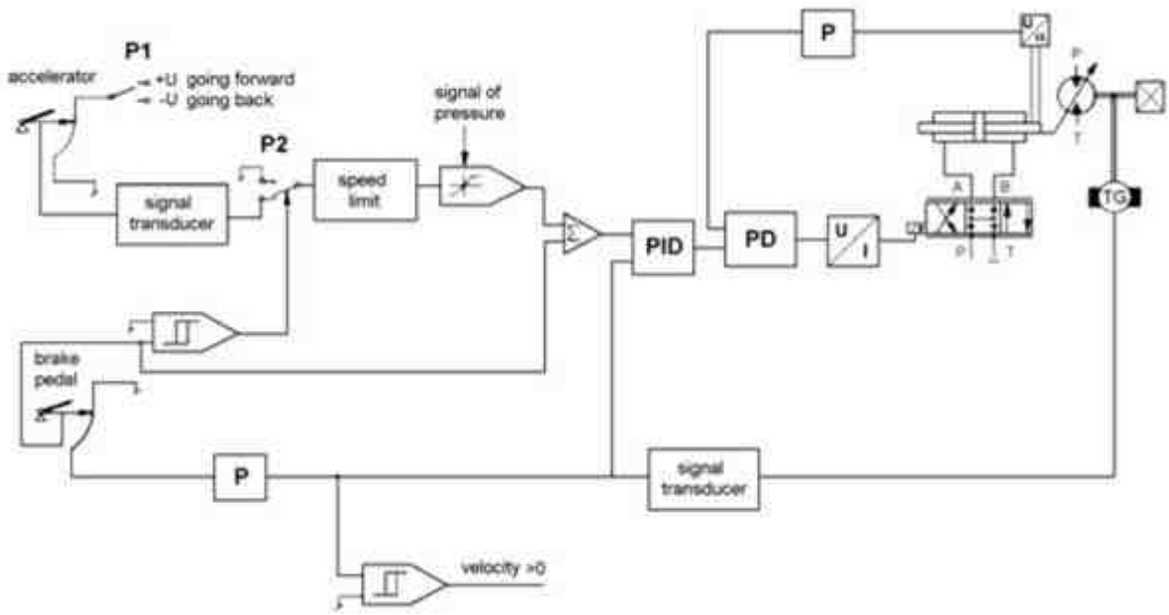

Fig.3. A schematic diagram of the speed governor of the vehicle

The main essence of the power transmission with regulation of the elementary volume of the engine, is running in the closed system, where the real value of the angular velocity, measured with a rate geerator, is compared with its set value. The set value is providet by a driver. Control error, converted by the governor, is an input signal for the main automatic controll system of the deflection angle. There is a logic circuit in this governor, with what we can have the set signal for a main automatic control system elaborated, according to signals from acceleration and break pedal. The logic circuit follows the hierarchy importance, and does not permit on simultaneous application of signals from the brake and the accelerator.The superior calculations of the process should show the proper settings of hydraulic subassemblies and combustion engine, in relation to efficiencies of all components, but the total efficiency is optimized as well. The wery special meaning in calculations of the process has controlling the power balance, because in every working ponit, the power required of the secondary unit, should not be greater than the one delivered from the engine and accumulator, taking into considerration losses in the hydrostatic transmission.

Vehicles, in which hydrostatic transmissions with the energy accumulation are used, are characterized by comfort of travelling, servicing and low fuel consumption. This kind of the transmission its recommendet for vehicles moving mostly with not stationary speeds, because the advantages of this system can be observed mostly during the breaking process and the weight of a vehicle with an hydrostatic transmission can be slight.
After road tests of the power transmission with the microprocessor control system, full verification of the system could be made. The results showed, that for the average traffic in Lodz, there is a possibility of saving 10-12% of the fuel and the toxicity of the exhaust gas can be twice lowered. Further savings in this system are not possible due to the selection of the hydrostatic maschine, regard to the peak power and maximum speed of the vehicle. Savings in the fuel consumption are connected mostly with regeneration of the energy from the braking process.

2. PROTOTYPE OF PARALLEL POWER FLOW TRANSMISSION SYSTEM

Gradual gear box with parallel power flow, hydropneumatic energy accumulators and control unit with microprocessor allows to decrease fuel consumption approx. 25? 35% and twice increases vehicle dynamics.

1. Description of product

Work on the construction of the hybrid drive in a city bus has led to the solution shown in Fig.1. The main units are: hydropneumatic energy accumulators and a three-range variable-speed transmission with a parallel power flow. The latter consists of: a planetary transmission with three simple series I, II, III, two clutches A and B which change over the ranges of ratio, a hydrostatic transmission with two machines a and b, and several toothed gears of constant axes. A change in the ratio in the hydromechanical variable-speed transmission is brought about by a change in the ratio in the hydrostatic transmission. The following configurations are possible: in range I-the connection of the hydrostatic transmission to the remaining part of the parallel system by means of a constant transmission at the output, and in ranges II and III-with the internal connection [1,2]. The method of connection of the hydrostatic branch to the mechanical one affects curves of the basic parameters, Fig.1, and the algorithm of operation of the control system.

Fot. 2. Hybrid Variable transmission test rig.

The construction of the variable-speed transmission gear-box and the type of the energy accumulator have an effect on the realisation of control of the transmission through control of the hydrostatic transmission. The introduction of a variable-speed transmission will reduce fuel consumption by approx. 12÷16%, and supplementing the transmission with a set of energy accumulators will result in a further decrease by 14÷18%. In view of the functioning of a hybrid drive, an essential problem is the manner of cooperation of energy sources: the primary - from the combustion engine, and the secondary - from the energy accumulator. The conception of such cooperation allowing the realisation of any cycle of driving in the city bus verified experimentally of Rexroth transmission. In principle, the combustion engine performs the function of the unit equalising the energy balance.

The microprocessor control system, Fig.2, for the following operating conditions to be obtained:

I. Standstill

1. The control system switched off. No tasks are performed in the system. The bus is parked in a bus depot or at a terminus.
2. The control system switched on. Direct current is supplied to the functional switches and governors. The valves controlling the oil flow are closed; z1=z2=z3=z4=0.
3. Charging the accumulators while parking. Thecharging pump connected to the combustion engine by means of a constant-ratio transmission, always pumps the oil to the low-pressure accumulators through non-return valve (z1), when the engine is running. In the comparator, comp (1) the selection of the maximum pressure values in the accumulators is made. During the vehicle standstill (? $_2$=0) these values are p_1=3 MPa and p_2=33 MPa; while driving: p_1=1 MPa and p_2=24 MPa, respectively.

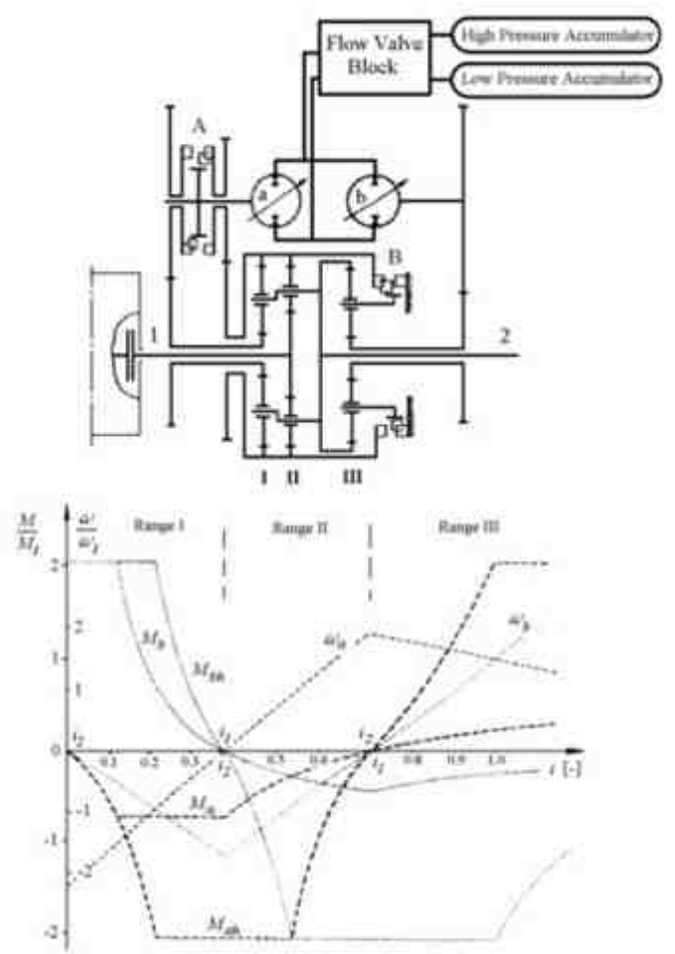

Fig.1. A schematic diagram of the power transmission system and curre's course of the basic parameters of the hydrostatic transmission

Until the pressure in the low-pressure accumulator reaches a value of 3 MPa, the comparator, comp (2) will not switch on switch A, thereby the control system is disconnected. The charging of the high-pressure accumulator can take place when switch P4 is in the position z2=1. Then, a signal from the comparator, comp (1), through the switches: A, 5, P4, 4 and 3 engages clutch (9) and sets the angular velocity $?_s=?_M$ in the combustion engine governor and switches on switch (6), while the deflection angle of the disk $?_{max}=18^o$ is given to the secondary governor of hydrostatic machine 'a'. When the value of p_{2max}=33 MPa is reached in the high-pressure accumulator, the comparator, comp (3), disconnects the system. In the combustion engine governor the signal controlling switch (1) is turned off, and the angular velocity $?_s=?_j$ is set, whereas the value of ?=0 is conveyed through switch (6) to the deflection circuit of the disk.

II. Driving

1. The vehicle is powered by a combustion engine only ('conventional drive'). Switch (P3) is in the z1=z3=z4=1 position, while switch (P4) in z2=0. When valve (z1) is turned-on, it is possible to make up leakage in the hydrostatic circuit by means of the low-pressure accumulators and the charging pump, to the value p_{1min}=1 MPa. A signal of the set speed of the vehicle is worked out in the unit of control of signals. The signal thus shaped is sent to adder (11), in which it is added to the signal from the brake pedal potentiometer. The signal of the set speed, through the matching system and switch (4), is also conveyed to the combustion engine governor.
2. Hybrid drive. The connections in the control systems are the same as described above, and switch (P4) is turned on. The phases of operations proceed here as in sections I.3

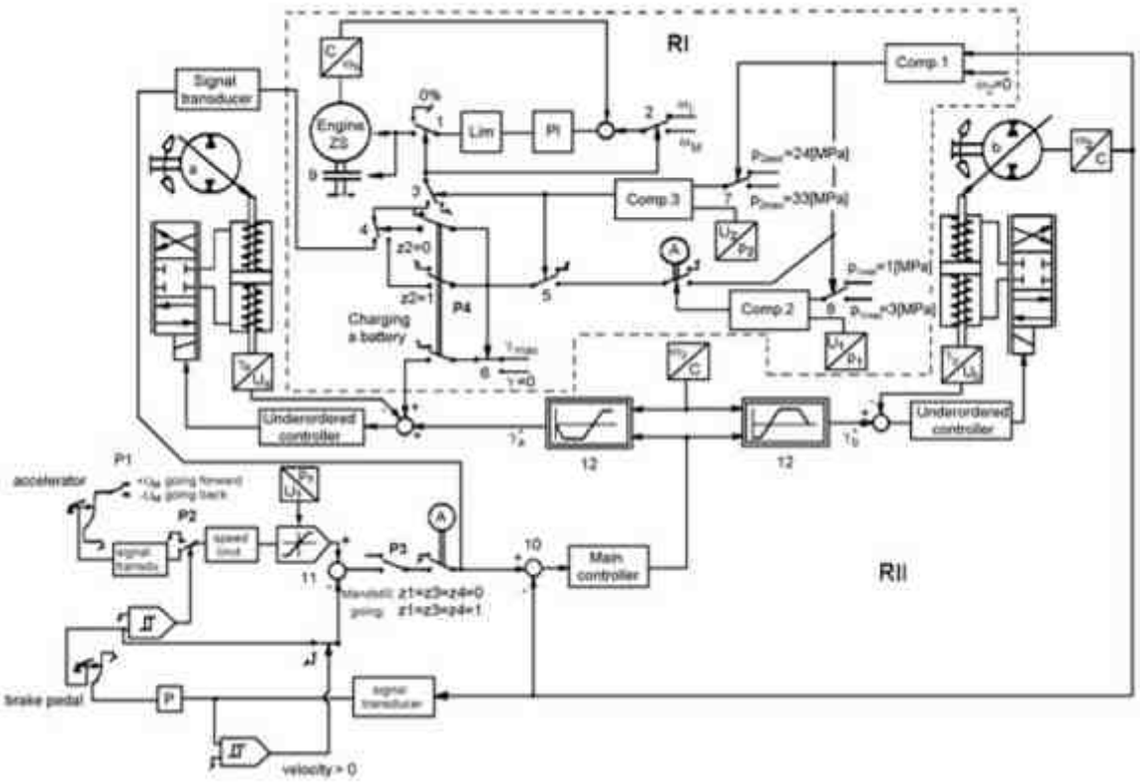

Fig.2. A schematic diagram of the controll system for the prototype variable-speed transmission and hydropneumatic energy accumulators

and II.1; if the pressure in the high-pressure accumulator is p_2>24 MPa, accumulated energy will be used for the motion of the vehicle. Below the set value of the pressure, the comparator, comp (3) will turn on switches (3) and (5) and send the signal to the engine governor, thereby allowing the interaction of two sources of energy. While braking there will be a reverse flow of energy to the high-pressure accumulator; the energy will accumulate in the accumulator as a result of the operation of governor RII.

References

1. Pawelski Z. Napêd hybrydowy dla autobusu miejskiego. Wydawnictwo Politechniki £ódzkiej, Monografia nr 890, 1996.
2. Pawelski Z.: Studies of the Speed Governor for a Variable-Speed Transmission with a Parallel Power Flow. ISATA'98, Paper Nr.98AE009.
3. Pawelski Z.: Modelowanie i obliczanie napêdu hydrobusu. Wydawnictwo Politechniki £ódzkiej, Monografia nr 979, 2000.

THEORETICAL RESEARCH ON THE DEVELOPMENT OF AN EXPERIMENTAL DEVICE TO EVALUATING THE FRICTION FORCES BETWEEN SEALS AND RODS OF HYDRAULIC CYLINDERS

CERCETARI TEORETICE ASUPRA DEZVOLTARII UNUI DISPOZITIV EXPERIMENTAL PENTRU EVALUAREA FORTELOR DE FRECARE DINTRE GARNITURILE SI TIJELE CILINDRILOR HIDRAULICI

Dr. ing. Petrin Drumea[1] , Prof. Dr. ing. Mohamed HAJJAM[2] ,
Dr. ing. Corneliu Cristescu[1] , Assoc. Prof. Dr. ing. Aurelian FATU[2]

[2] *Hidraulics and Pneumatics Research Institute, Bucharest-ROMANIA*
[2]*Laboratoire de Mécanique des Solides, Angouleme-FRANCE*
cristescu.ihp@fluidas.ro ,.ihp@fluidas.ro, aurelian.fatu@univ-poitiers.fr

Abstract: *The development of an experimental device designed to measure the friction forces in real hydraulic rod seals has been presented. The first part is dedicated to the presentation of the device together with the adopted technical solutions and the principle of measurement. Furthermore, in order to dimension the device force transducer, a preliminary numerical investigation is developed to predict the friction forces in the seals. Finite element commercial software and the inverse hydrodynamic lubrication (IHL) theory are used to compute the friction force variation versus the rod speed, for different fluid viscosities.*

Keywords : *hydraulic seal, experimental device, numerical simulation, inverse hydrodynamic lubrication, hydraulic cilinders, tribological behaviour, friction forces, seals.*

1. INTRODUCTION

The study of elastohydrodyamic lubrication (EHL) problem in hydraulic elastomeric seals presents great difficulties. Mainly, two different techniques are used: classical EHL theory based on the Reynolds equation coupled with the elastic behaviour of the seal by the mean of compliance matrix and the inverse hydrodynamic lubrication (IHL) theory.
When the classical EHL theory is used, the Reynolds equation is solved in order to find the pressure field as a function of the film thickness. Moreover, the pressure field modifies the seal deformation and consequently the film thickness. An iterative process is employed in order to obtain the convergence of the algorithm. Several authors employed this method to characterise the behaviour of different hydraulic elastomeric seals [1-9]. The second method, employed in references [10] to [13], suppose that pressure field in the contact is known and the film thickness is searched.
In order to evaluate the pressure in the contact, a first finite element analyses of the seal mounting is made. This computation gives the static contact pressure in the contact. Furthermore, it is supposed that the static contact pressure is replaced by the hydrodynamic pressure. This method, called the inverse hydrodynamic lubrication (IHL) theory, presents a very quick alternative in evaluating the seal hydrodynamic behaviour. However, the results are highly dependant on the precision of the preliminary finite element computation. In order to avoid this problem, a new method that consists in a correction of the IHL results by the classical direct theory has been presented in reference [14].
In order to have a better understanding of the way in which elastomeric seals work and to validate the different numerical model, the development of an experimental device has been decided. The first part of the paper shows the design of the test bench. The general principle and the technical solutions adopted are presented.

It is shown that in order to choose the load sensor, a preliminary numerical investigation of the seal behaviour is necessary.

2. EXPRIMENTAL DEVICE FOR MEASURING FRICTION FORCES

In order to evaluate the friction forces from the sealings of the hydraulic cylinders, was projected and realized an experimental device. This experimental device is conceived purposefully for working by mounting it on a stand which provides operational strokes.

2.1. The basic requirement taken into account at projecting the device

At projecting the experimental device were taken into account some pre requisites, which would ensure the optimum evaluation-measuring of the friction forces from the sealings of the hydraulic cylinders.
The main pre requisites were:

- To eliminate as much as possible big masses in motion, for avoiding the occurence of the inertial forces;
- To evaluate precisely the additional pressure foces which may occur beside the friction forces from sealings;
- To eliminate the mechanical bindings which may occur in working;
- To provide fluid supply under various operational pressures;
- To measure and, if it is the case, to record the evolution of the friction forces;
- To measure and, if it is the case, to record the operational strokes;
- To measure and, if it is the case, to record the operational pressure;
- To maintain under fluid pressure the sealings during the entire working stroke.

For reaching all these pre requisites, it was conceived a scheme of operation which represented the groundwork for projecting the experimental device presented below:

2.2. Presentation of the technical solution and the principle of measurement

The main element of the experimental device is represented by the technical solution found for maintaining under the pressure of the operational fluid the sealings of the cylinder rod, without generating additional pressure forces on the rod head, which may affect the result of the measurements.
The adopted technical solution was the replacement of the rod cylinder head sealing, figure 1, with one double sealed guidance bushing, which to contain 2 U type sealings, fixed with the wings facing one another, see figure2.
The operational fluid is injected between these two sealing elements, which it strain, in an operational system, identical with that of a hydraulic cylinder running.
The only problem which appears is that the friction force measured at the end of the rod is given by the friction forces from the two sealings, at the same direction of motion of the rod, one of the simulating the sealing when the rod gets in the cylinder and the other when it gets out.

Fig. 1 - The rod cylinder head sealing

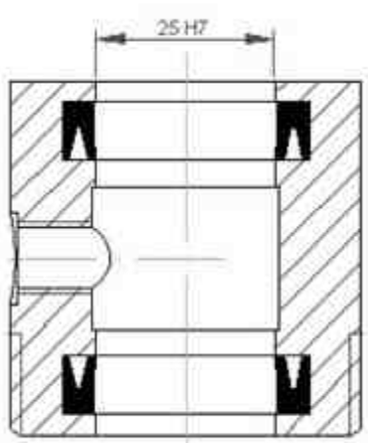

Fig. 2- The double sealed guidance bush

These 2 friction forces from the 2 sealings are, probably, not equal for the same direction of motion of the rod, but surely can be comparable. That is why it is assumed that the friction force, between a fitting and a rod, represent, approximately, half of the force measured at the rod by the force transducer.
If it is considered the weight *Gt* of the rod suspended by the force transducer and the friction forces from the 2 sealings *Ff1* and, respectively, *Ff2,* then the force *Fm,* measured by the force transducer, will be given by the relation: $Fm = Ff1 + Ff2 + Gt$.
Assuming that the 2 friction forces *Ff1* and *Ff2* are, approximately, equal it may be concluded that the friction force in a sealing *Ff,* will be:
$Ff = Ff1 = Ff2 = (Fm\ \ Gt)/2$ (1)
Using these mathematical formulas, can be determine the friction force values from the sealings of the rods of the hydraulic cylinders.
Note: According to the data from above, it results that the determining of the size/capacity necessary for the **force transducer** is very significant. Taking this into account for a proper gauging before projecting the experimental device, **was necessary** the use of the **mathematical modelling** and **numerical simulation** of the process of sealing the rods of the hydraulic cylinders, presented below.

2.3. Presentation of the experimental device

The experimental device, **figure 3**, operates in vertical position, the rod (1) being fixed and suspended on the upper bridge of the stand, by means of a threaded bush (2), by the force transducer (3), connected at the other side by the up catching stationary head (4) of the existing stand. Downside, the rod crosses the double sealed bush (5) assembled by means of a nut (6), from the used cylinder, by its liner (7). The cylinder liner is used just for supporting the double sealed bush and for making pace necessary for performing the operational strokes of the cylinder rod. Downside, the cylinder liner is connected to the mobile rod (8) of one the hydraulic cylinder, of the existing stand where will be mounted,, by means of a connection part (9) and of a nut (10).

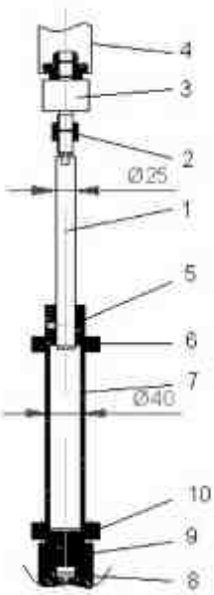

Fig. 3 - Schematic representation of the experimental device

Fig. 4 -The used hydraulic cylinder

By mounting the liner of the experimental cylinder on the mobile rod of the hydraulic cylinder (CHS) of one existing stand, this provides the motion of the cylinder liner together with the double sealed bush, up and down. The rod of the cylinder, which passes through the double sealed bush, is immobile, which eliminate the risk of additional inertial force perturbing the force transducer.
In order to eliminating other additional forces (of binding, bowing etc) the following conditions must be fulfilled:

- Ensure coaxially of the rod and double sealed bush;
- Measure the friction forces when the bush goes down.

The experimental device is manufactured starting from basic components (the cylinder liner, the cylinder rod etc) of a classical hydraulic cylinder, produced by REXROTH Co., with rod diameter of 25 mm and piston diameter of 40 mm, presented in figure 4.

2.4. The principle of operation of the experimental device

According to the principle of operation of this experimental device, implies its mounting on a vertical stand, available in the laboratory of INOE 2000 IHP, figure 5. To do this, is necessary to dismantle the existing device (DES) and replacement it with the experimental device. The mounting of the experimental device (1) on the existing bench (2), is made according to figure 6. Existing stand (2), by plant hydraulic own (3), provides vertical movement in either direction, the movable rod (4) of the hydraulic cylinder of the stand (CHS), and, also, the measuring of the work race through race/ stroke transducer (5).

The measurement of the friction forces is performed at the downward stroke of the double sealed bush, for ensuring the alignment of the rod and the double sealed bush and, also, for avoiding the occurrence of unwanted mechanical binding/bowing
During the vertical motion of the bush, the operational pressure at the double sealed bush, is continuously provided, through a hydraulic hose, by an additional hydraulic installation, shown symbolic in the figure 7, which consists of a manual pump Pm, which aspires the oil from the tank T and discharges under the pressure, by means of the unidirectional valve Ss, the pressurized fluid towards the 2 sealings of the bush by the hole existent between them.

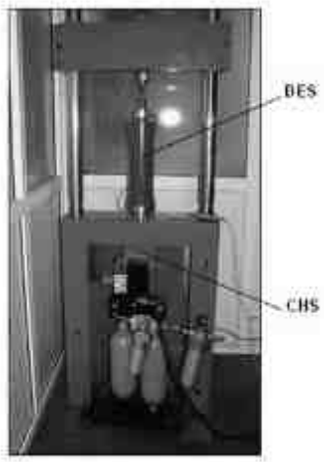

Figure 5: Existing bench test

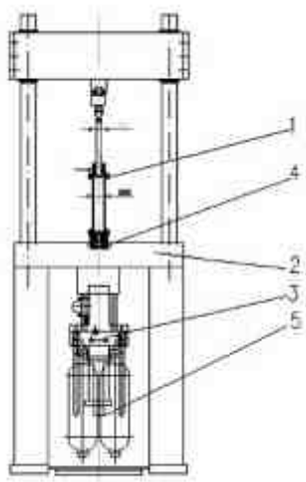

Figure 6: Schematic representation of the new bench test

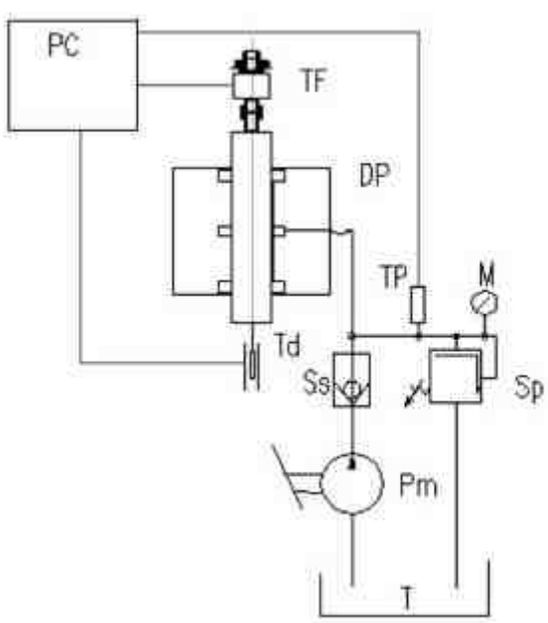

Figure 7: The scheme of the hydraulic and informatics links of the experimental device

The pressure circuit is supported by a safety valve Sp and it is provided with a manometer M for reading the value of the operational pressure and, also, a pressure transducer TP, which allows recording of the pressure values, by means of a data acquisition board and the storage and processing on computer of the evolution of pressure in time.
By means of the force transducer TF and of the stroke transducer Td, may be acquired and processed data regarding the evolution of the friction forces and the operational stroke.
Using a professional software, may be drawn the diagrams showing the stroke, pressure and friction force variations, versus time and, also, the variation of the pressure and friction forces, versus stroke..
The experimental device presented above, which is in the stage of execution, will be mounted on the previously mentioned stand, existing in INOE 2000-IHP and will represent a real groundwork for the experimental research performed in the field of sealings, leading to the validation of the mathematical models used for simulating on computer the sealing process.

3. NUMERICAL MODEL AND RESULTS

In order to have an idea about the values of the friction force and leakage that have to be measured, a preliminary numerical investigation is developed. The first part concerns the modelling of the seal behaviour during the assembly that must take into account the hyper-elastic behaviour of the seal material and the sealed pressure. The contact pressure between the seal and the shaft that result from this first calculus is used in the second part to predict the seal friction force and leakage. The inverse hydrodynamic lubrication (IHL) theory is used to predict the seal behaviour do not consider the transient operation conditions but can lead to a good approximation for the searched seal functioning characteristics.

3.1 Analyse of seal mounting

First step in modelling reciprocating hydraulic rod seals is computing the contact static pressure between the seal and the shaft (or rod) once the seal is mounted and pressurised.
Abaqus software has been used to simulate the seal behaviour during the mounting. The seal is made on rubber material. The stress-strain behaviour of typical rubber materials, shown in figure 8, is elastic but highly nonlinear. This type of material behaviour is called hyperelasticity. The deformation of hyper elastic materials remains elastic up to large strain values (often well over 100%). The following assumptions are considered:

- The material behaviour is elastic and incompressible.
- The material behaviour is isotropic.
- The simulation will include nonlinear geometric effects.

A convenient way of defining a hyper elastic material is to supply the software with experimental test data. Figure 9 shows the stress/strain curve for the seal material, obtained by uniaxial tension test. Normally, in order to completely characterize a hyper-elastic material other test data must be supplied, regarding the biaxial tension test and the volumetric test. Unfortunately, the uniaxial tension test is the only data available. However, considering that the Poisson's ratio is 0.49, the finite element (FE) software allows a polynomial evaluation of the real stress-strain curve using only the available uniaxial tension data.

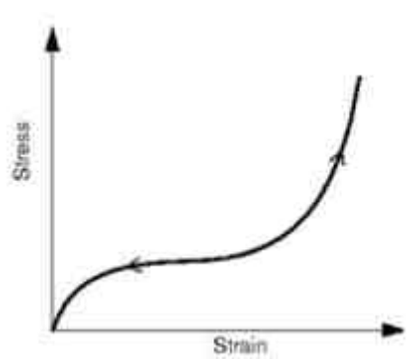

Figure 8: Typical stress-strain curve for rubber

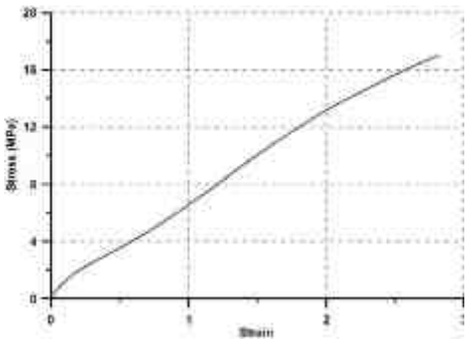

Figure 9: Stress-strain curve by uniaxial tension test

Figure 10 shows the seal geometry and the FE mesh. The geometry is divided in 51536 linear axysimmetric triangular elements.

The potential contact zones between the seal and the shaft or housing are meshed with linear quadrilateral elements that are recommended for the treatment of contact problems. Also, the shaft and the housing are assumed to be rigid. Several simulations have been realised for a sealed pressure ranging between 10 MPa and 19 MPa. Figure 11 shows seal geometry after mounting and the static contact pressure between the seal and the shaft, for three different sealed pressures. It can be observed that the increase of the sealed pressure leads to the decrease of the contact axial length and the increase of the contact pressure.

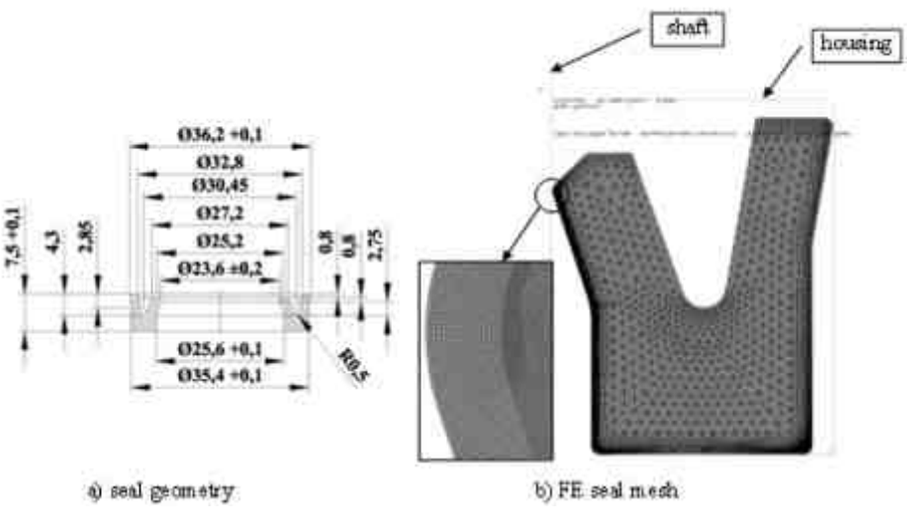

Figure 10: Seal geometry and FE seal mesh

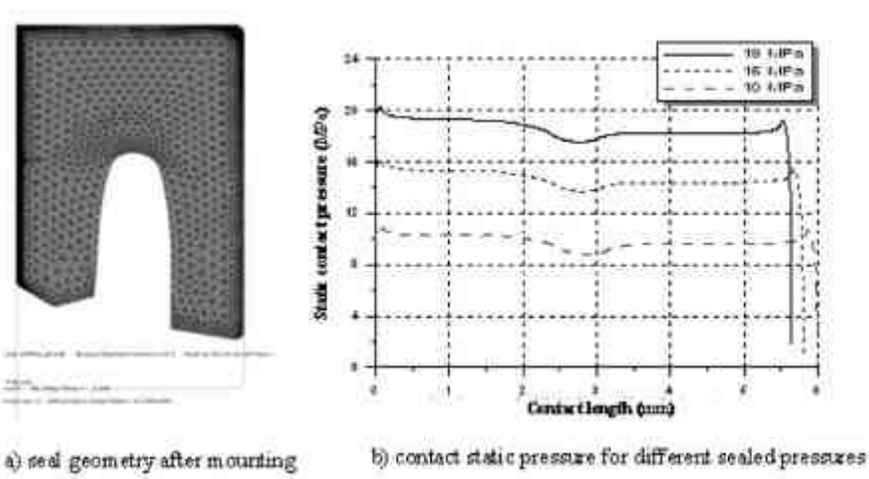

Figure 11: a) Seal deformation after mounting b) Comparison of the static contact pressure between the seal and the shaft, for different functioning hydrodynamic pressures

3.2 Hydrodynamic simulation

Using the static contact pressure presented in figure 11 b), the sealing performances (friction force and leakage) are determined using the inverse hydrodynamic lubrication (IHL) theory. First hypothesis is that the lubricant hydrodynamic pressure replaces the contact static pressure. Classical 1D Reynolds equation is:

$$\frac{\partial}{\partial x}\left(h^3 \frac{\partial p}{\partial x}\right) = 6U\mu \frac{\partial h}{\partial x} \qquad (2)$$

where h is the film thickness, U is the shaft linear speed and μ is the dynamic viscosity of the fluid. The integration of equation 2 yields to an algebraic 1D cubic equation in the unknown film thickness:

$$\frac{h^3}{\mu}\frac{\partial p}{\partial x} = 6U(h - h_0) \qquad (3)$$

where h_0 represents the film thickness at the position where the pressure gradient is nil. In order to solve equation 3 the value of h_0 must be known. The film thickness is searched in a domain point A where the second pressure gradient is nil.

By deriving equation 2 and considering that $\frac{\partial^2 p}{\partial x^2} = 0$ the film thickness in point A is:

$$h_A = \sqrt{2\mu U / \left.\frac{\partial p}{\partial x}\right|_A} \qquad (4)$$

Knowing h_A the value of h_0 is approximated by:

$$h_0 = \frac{2}{3} h_A$$

Consequently, equation 3 can be written as:

$$aH^3(x) - H(x) + 1 = 0 \qquad (5)$$

where $H(x) = \frac{h(x)}{h_0}$ and $a = \frac{h^2{}_0}{6\mu U}\frac{dp}{dx}$

It is important to call attention to the importance of a very precise approximation of the contact pressure resulting from the FEM analyses. Small perturbations of the contact pressure can induce big perturbations in the evaluation of the first pressure gradient and consequently give a wrong approximation for coefficient a in equation 5.

Newton-Raphson method is used to solve equation 5 and obtain the hydrodynamic film thickness $h(x)$. In order to verify the result, equation 2 is solved in the unknown film pressure, starting from the film thickness obtained by IHL. The hydrodynamic pressure obtained in this way must be identical with the initial contact pressure that results from the FEM simulation. Otherwise, the FE mesh must be refined in order to ameliorate the result accuracy for the first pressure gradient.

The main lines of the numerical algorithm developed in this paper are presented in figure 12.

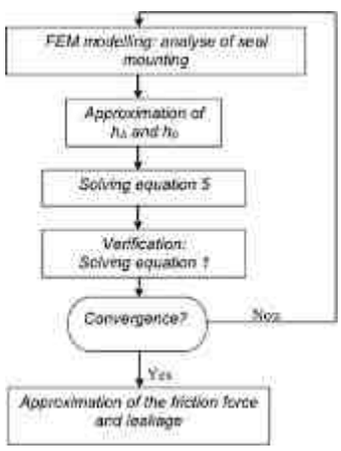

Figure 12: Numerical algorithm

3.3 Numerical Results

Figure 13 shows the contact pressure field, the film thickness and the hydrodynamic pressure obtained for μ = 0.1 Pa.s and U = 0.15 m/s. The film thickness h is obtained by the IHL theory and then used to compute the hydrodynamic pressure. It can be seen that the hydrodynamic pressure is identical with the initial contact pressure which proves the algorithm convergence.

Several simulations have been made in order to investigate the variation of the friction force and leakage as a function of the viscosity and relative velocity between the seal and the shaft (figure 14). The maximum predicted friction force is 180 N for 0.35 m/s and 20 μ = 0.15 Pa.s. The minimum predicted friction force is 24.5 N for 0.1 m/s and μ = 0.01 Pa.s.

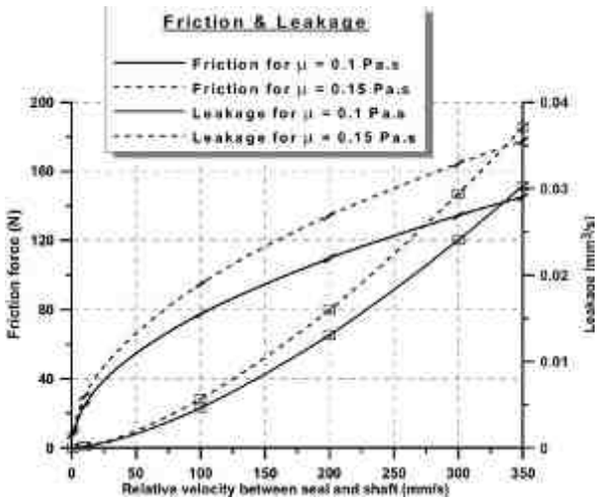

Figure 13: Variation of the friction force and leakage with the velocity for two different viscosities

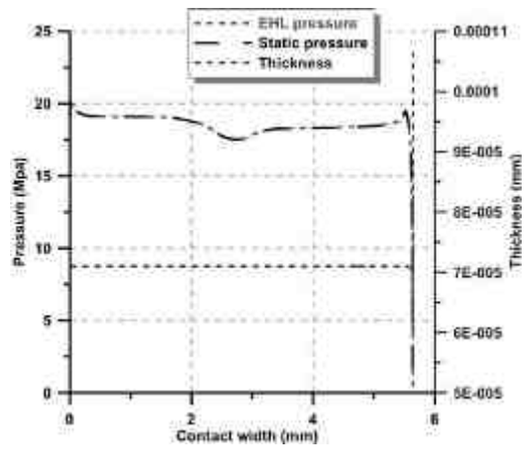

Figure 14: Contact and hydrodynamic pressure fields and film thickness at 19 MPa sealed pressure

The results predict a maximum friction force of 180 N. Considering that the test device load sensor will measure the friction force of 2 seals, the maximum measured force will be 360 N. Moreover, the prediction of the friction force is based on the hypothesis that the seal is functioning in perfect hydrodynamic regime and for a perfect axysymmetric configuration. If no-lubricated contact conditions appear, the friction force can increase. In order to eliminate this doubt the load sensor must measure loads up to 500 N. Also, the predicted minimum friction force is 24.5 N. In order to have a good measurement of this level of the load it is a good choice if the sensor sensibility is at least equal to 1 N.

5. CONCLUSION

This paper presents the development of an original experimental device made to analyze real hydraulic rod seals during fully transient operation conditions. The device is design to precisely evaluate the friction force variation in the seals versus time and operational stroke. The sealing fluid pressure is also precisely controlled and measured.

A numerical simulation of the seal behaviour is developed in order to evaluate the friction forces. A FEM commercial code is used to simulate the seal behaviour during the mounting and to evaluate the static contact pressure and width.

Furthermore, the IHL theory is used to compute the hydrodynamic film thickness in the contact and to evaluate the seal friction force and leakage. The results permits to choose the appropriate force transducer that must be used on the experimental device.

References

[1] Nikas, G.K., (2003) "Elastohydrodynamics and Mechanics of Rectangular Elastomeric Seals for Reciprocating Piston Rods," *ASME J. Tribol.*, 125, pp. 60-69.

[2] Nikas, G.K., (2003), "Transient Elastohydrodynamic Lubrication of Rectangular Elastomeric Seals for Linear Hydraulic Actuators," *Proc. IMechE, Part J: J. Engineering Tribology*, 217, pp. 461-473.

[3] Nikas G.K., (2003), "Analytical Study of the Extrusion of Rectangular Elastomeric Seals for Linear Hydraulic Actuators," *Proc. IMechE, Part J: J. Engineering Tribology*, 217, pp. 365-373.

[4] Nikas, G.K., Sayles, R.S., (2004), "Nonlinear Elasticity of the Extrusion of Rectangular Elastomeric Seals and its Effects on Elastohydrodynamic Numerical Analysis," *Tribol. Int.,* 37, pp. 651-660.

[5] Nikas, G.K., (2004), "Theoretical Study of Solid Back-up Rings for Elastomeric Seals in Hydraulic Actuators," *Tribol. Int.*, 37, 689-699.

[6] Thomas, S., Blouin, A, Hajjam, M., Comportement des joints hydrauliques, *Rapport CETIM n°3, Contrat LMS-CETIM n° 781727*.

[7] Yang, B., Salant, R.F., (2008), “A Numerical Model of a Reciprocating Rod Seal with a Secondary Lip,” *STLE Tribol. Trans*., 51, pp. 119-127.

[8] Yang, B., Salant, R.F., (2008), “Numerical Model of a Tandem Reciprocating Hydraulic Rod Seal,” *ASME J. Tribol.*, 130, 032201 pp. 1-7.

[9] Yang, B., Salant, R.F., (2008), “Soft EHL Analysis of a Reciprocating Hydraulic Step Seal,” in Proc. of *ASME-STLE Int. Joint Tribol. Conf., Miami (FL)*, pp. 1-3.

[10] Prati, E., Strozzi, A., (1984), “A Study of the Elastihydrodynamic Problem in Rectangular Elastomeric Seals,' *ASME J. Tribol*., 106, pp. 505-512.

[11]Kanters, A.FC., Verest, J.F.M., Visscher, (1990), “On Recoprocating Elastomeric Seals: Calculation of Film Thickness Using the Inverse Hydrodynamic Lubrication Theory,” *STLE Tribol. Trans*., 33, pp. 301-306.

[12] Müller, H.K., Nau, B.S., (1998), Fluid Sealing Technology: Principles and Applications, Marcel Dekker Inc., N.Y

[13] Nikas, G.K., Sayles, R.S., (2006), “Study of leakage and friction of flexible seals for steady motion via a numerical approximation method,” *Tribol. Int*., 39, pp. 921-936.

[14] Dobrica, M., Hajjam M., (2009), "Modélisation des joints hydrauliques", *Contrat LMS-CETIM n°781958*

INNOVATIVE APPROACH IN THE IMPLEMENTATION OF THE INDUSTRIAL ROBOTS INTO THE NEURO-MOTOR REHABILITATION

ABORDAREA INOVATOARE ÎN PUNEREA ÎN APLICARE A ROBOTILOR INDUSTRIALI ÎN REABILITAREA NEURO-MOTORIE

Daniel Bratanov*
Petre Lucian Seiciu**

*Materials & Manufacturing Engineering Department, Mechanical And ManufacturingEngineering Faculty, The University of Ruse, Bulgaria
**Machine elements &Tribology Department, Mechanical Engineering and Mechatronics Faculty, "POLITEHNICA" University, Bucharest, Romania

Abstract
The article is focused on the development of a system for upper and lower limb simultaneous motion therapy methodology for patients with neuro-motor impairments. The therapy will be driven by cooperatively working industrial robots using intelligent manner for the identification of the required physiotherapy motions. This will be achieved by a robotic rehabilitation system called ROBOTHERAPY.

Keywords: *rehabilitation robotics, industrial robots, motion planning, cooperative robots.*

Introduction

Among the benefits of the industrial robots is their ability for quick reprogramming of the executed tasks that requires different speeds and trajectories of the end-effector. This ability makes the use of industrial robots in some areas of the social sphere, like the medicine very effective. The implementation of industrial robots in the rehabilitation of patients suffering from of spastic hemi paresis will significantly increase the quality of the medical treatment and will reduce the hard physical work of the therapists.

The use of industrial robots in limb's rehabilitation has the following advantages:

- ? Increase the quality of the physiotherapy procedure;
- ? Performs rehabilitation exercises that are impossible for the conventional therapy;
- ? Provides an uninterrupted rehabilitation cycle;
- ? Releases the qualified medical staff from heavy physical work and allows them focus on the domain of the problem.

The spastic hemi paresis is normally a result of a brain stroke, brain injuries, multiple scleroses, brain tumour etc. In that cases are recognised not only decreases of the muscle force, but the tonus of the muscles increases, causing problematic consequences. The physiotherapy and the rehabilitation are always a part of the medical treatment process of the cases related to spastic hemi paresis of the limbs. The aim of this treatment is to recover the range of motion of the patients' limbs, to straighten the muscles and provide a reduction of the limbs' spasticity.

The limbs rehabilitation is the last, but very important phase of the recovery process of patients with hemi paresis. Thanks to the motion therapy the people recover fully or partially their motor functions, which makes them adequate and independent. The limb rehabilitation is organised in three basic procedures:

1.Passive rehabilitation – those are procedures and exercises for stirring that are performed compulsory with the limb of the patient by a physiotherapist. This is a hard manual work that the medics do in order to stir the patients;

2.Active therapy – those are stir procedures that the patient performs independently. The active therapy is follow-up after the passive therapy for patients with heavy spastic paresis. For the patients with light degree of disability the therapy may start directly with active procedures;

3.Active therapy trough resistance – this is the last phase of the rehabilitation procedure of the limbs. The therapy is performed independently by the patient following a given exercise scheme and using specific equipment to straighten the muscles of the affected limb.

The passive therapy is the most important phase of the spastic limb rehabilitation. Because of the resources that it consumes could be stated that it reduces the coefficient of efficiency of the qualified medical personnel. This type of therapy is an object of many systems for rehabilitation automation, but all of them can be assessed as private cases, e.g. they can perform one, or group of rehabilitation procedures without covering the whole spectrum of limb's rehabilitation procedures.

The introduction of robots into this type of therapy will position the role of the therapist on the front line as specialists and diagnostics of the proper recovery treatment and will leave the heavy and unpleasant part of the rehabilitation work to the robotic systems.

The medical service covers the largest portion of the humans' social sphere. In the last years the robots are entering actively the medicine, but they still face difficulties to cover the area of the rehabilitation. The implementation of robots into the rehabilitation and the adaptation of the existing on the market industrial robots for the purposes of the limb rehabilitation will improve significantly the quality of the recovery procedures of patients suffering from spastic hemi paresis.

The ability of the robots to perform in practice unlimited amount of exercise cycles with constant speed and trajectory makes them extraordinary rehabilitators. The other basic advantage of the robots towards the existing rehabilitation automats is the freedom of the therapist to decide on an individual exercise to a given patient that may require a unique trajectory. This is a feature that is not possible for the regular rehabilitation manipulators based on hard program of exercises.

ROBOTHERAPY - a robotised rehabilitation system

The proposed by the authors ROBOTHERAPY system is focused primarily on the transfer of robotics technologies into medical therapy technologies, namely into neuro-ehabilitation. The innovation compared to the current state of the art in the neuro-rehabilitation and rehabilitation robotics suggested by the ROBOTHERAPY is constrained. The medicine has one of the hardest requirements towards the robotic devices. The robotic systems applied in the medical practice have covered strict criteria regarding the safety and accuracy, noise, electromagnetic fields and other. Most of the robots working in the medicine are with direct control leaded by the operator with a kind of haptic devices, exoskeletons etc., especially the robots involved in the surgery. The idea of ROBOTHERAPY is to give a level of autonomy to the robots, providing them the freedom to do what they are designed for – to perform a given task over a programmed trajectory and with desired speed.

In general the rehabilitation robotic devices can be classified as:

? Systems for rehabilitation of the upper limb;

? Systems for rehabilitation of the lower limb;

? Systems for rehabilitation of the body.

The systems for rehabilitation of upper limb have the biggest complexity which is a result of the large amount of degrees of freedom and the rage of motions they have to deal with. The best example for implementation of industrial robots in the rehabilitation of upper limb is the coordinated by Budapest University for Technology and Economics project REHAROB [3] (Fig.1) funded under Framework program five (FP5) of the European Union. Other systems of that kind, providing a full range of upper limb motions are not known.

The robotised systems for rehabilitation of lower limb are with more simple structure. In most of the cases they work in single plain which makes their programming and respectively their use very easy. Examples of manipulators for rehabilitation of lower limbs are presented in Fig.2.

Fig.1 The robotised upper limb rehabilitation system REHAROB working in the National Institute for Medical Rehabilitation in Budapest, Hungary

The aim of the project ROBOTISED MOTION THERAPY WITH COMPLEX AND COORDINATED 3D MOVEMENT FOR UPPER AND LOWER LIMBS - ROBOTHERAPY is the development of a system for upper and lower limbs simultaneous motion therapy methodology for patients with neuro-motor impairments. This therapy will be driven by cooperatively working industrial robots using the knowledge and the experience of the medical staff for the identification of the required physiotherapy motions. A rehabilitation system with such level of complexity, involving in its operation three cooperatively working industrial robots currently is not known.

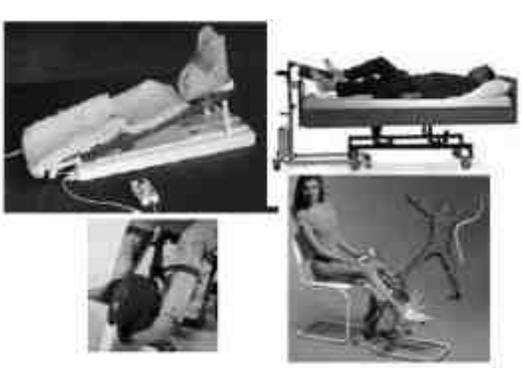

Fig.2 Automated systems for rehabilitation of lower limb

In order to achieve its aim the ROBOTHERAPY system must reach the following objectives:

1. The system must be able to provide simultaneous upper and lower limb motion therapy for the patient with neuro-motor impairments. This will lead to partial replacement of the physiotherapist in motion exercises. The physiotherapist will teach and monitor the therapeutic exercises with ROBOTHERAPY, meanwhile conducting motion exercises with another patient. This new advanced physiotherapy technology will allow the disabled not to suffer from inappropriate therapy because of limited accessibility to physiotherapists all over world.

Three hypotheses proved by the currently existing upper limb robotised rehabilitation system REHAROB [3] can be considered as valid for the proposed ROBOTHEPAY system. Those hypotheses are:

Hypothesis 1: the robot assisted motion therapies increase of the success rate in neuro-rehabilitation by 5% with special anti-spastic patterns.

Hypothesis 2: repeating of daily motion exercises reduces the total duration of the neuro-rehabilitation by 10%.

Hypothesis 3: intelligent and robotic support to upper limb rehabilitation is cost-effective for the society.

ROBOTHERAPY contribution to Community social objectives

All EU Member States and also the Associated States are being faced with demographic, structural, social and technological changes of major importance, which are likely to have consequences in a variety of fields:

Financing of social security systems, employment [4]: society is ageing, due to increased longevity on the one hand and declining birth rates on the other. There is an interdependence between the number of people in employment and those no longer active in the labour force: a decreasing number of active people will have to guarantee the financial and social security for and

increasing number of inactive or retired people: the ratio of "active/dependent" is 2.9 to 1 at present. However, by 2040 this is expected to be 1.4 to 1 in OECD.

If used efficiently ROBOTHERAPY may hold the increase in the number of disabled with regained capabilities who can become the productive member of the society after injury. The implementation of such system will not increase the unemployment rate, which is the stereotype side effect of automation. Currently every single European country lacks trained physiotherapists. ROBOTHERAPY will not replace but support the physiotherapist, approximately duplicating his/her therapeutic skills. It is estimated that by 2020, 25 % of the population will be over 65 years of age. The number of people over 80 - particularly at risk of frailty and dependence - will increase even more [5]. In this context a 300% increase of people over 80 years old in the period from 1960 until 2020 is forecasted. In addition, the prevalence of disability and functional problems in daily life is increasing rapidly due to ageing, accident rates and modern health technology (due to the fact that this enables people to live longer, thereby increasing the risk of disability and ill- health). It is believed that ROBTHERAPY with sufficient market expansion will be cheaper than the traditional rehabilitation of the disabled. The use of advanced robotic techniques and intelligent technologies will result in a better and/or faster rehabilitation all over Europe.

The robotised therapy may impact upon the number of people employed in the rehabilitation institutes who needs training for the operation of the ROBOTHERAPY cell. It is considered more important that the ROBOTHERAPY cell can be used as a reference laboratory for medical education both on graduate and postgraduate level.

Improving the quality of life and health

The use of robots to augment manipulation for people with severe manipulation disabilities has been explored for close to 30 years. Only a very small portion of this work has resulted in viable products.

The first step in valid commercial devices is the existence of the device itself, in concert with the required sales, marketing, training, and technical support to make it viable.

It is very early in the product life of the commercial devices discussed above. The high cost/usefulness ratio of most rehabilitation robots makes their use very limited. The idea of ROBOTHERAPY to be build from industrial robots expresses the basic exploitation target of the proposed system, namely to built the prototype robotised rehabilitation station to the greatest extent from commercially available equipment, thus making its manufacture easy and cost effective.

Conclusions

ROBOTHERAPY will provide an aid for the rehabilitation of patients with stroke or traumatic brain injury producing a wide variety of neurologic deficits such as hemiplegia, hemisensory loss, aphasia etc. The majority of the research in rehabilitation robotics [5, 6, 7] focuses on helping disabled with permanent disabilities in daily living. The proposed ROBOTHERAPY system will create rehabilitation equipment for disability prevention.

References

[1] Dallaway JL, Jackson RD, Timmers PHA (1995) Rehabilitation robotics in Europe. IEEE Transactions on Rehabilitation Engineering. 3. 35-45.

[2] Gusztáv ARZ, András TÓTH, Gabor FAZEKAS, Daniel BRATANOV Development of the REHAROB upper limb physiotherapy system, RAAD2002, Budapest, Hungary

[3] [4] Employment and People with Disabilities Report of the Special Meeting of the High level Group on Disabilities. Brussels, 15.Oct.1997

[5] Assistive Technology for the disabled and elderly; regulations and policy options. Report for the European parliament, Scientific and Technical Options Assessment (DGXIII - STOA/2929 Luxemburg), 26 pp, March 1996.

[6] Resolution of the Honory Council of the HEART project. Final joint declaration of the meeting of the Council in Madrid, 16-17 October 1995 in the presence of the minister of Social affairs of Spain and the minister of Health and Social affairs of Sweden and representatives of member states. Implementation of the HEART (Horizontal European Activities in Rehabilitation Technology) study proposals, requiring action at European level.

[7] Ch. Bühler, editor, "Forum for European Rehabilitation Robotics", Proceedings of the 1st FERR workshop, Wetter 1995

ADAPTIVE CONTROL SYSTEMS WITH MODIFICATION BY STEP FOR HORIZONTAL AXIS WIND TURBINES

SISTEME DE CONTROL ADAPTATIV CU MODIFICARI DE TREAPTA PENTRU CENTRALELE EOLIENE CU AXA ORIZONTALA

S.L.dr.ing. Lucian NASCUTIU* ; drd.ing. Daniel BANYAI* ;
S.L.dr.ing. Lucian MARCU* ; Prof.dr.ing. Liviu VAIDA

*Universitatea Tehnica din Cluj-Napoca

1. Adjustment scheme for angular position of blades of wind turbines

Under the energy issue, the need of adjustable the angle blades of wind turbines, derived from the fact that their speed is directly dependent on the speed of air currents and indirectly (transmission through the consumer) the load of wind power at some point (necessary energy generators currently in power, that of mechanical energy in the form of speed, torque and power with other types of consumers). From protection point of view, reliability and endurance that wind power, correct positioning of turbine blades minimizes the vibration induced in the structure, namely the applicant rotor camps.

Also a suitable position can be brought to a speed rotor minimal or null and thus with braking systems to ensure the necessary conditions in case of service or if regular inspections.

Looking at above mentioned schemes regulating the angular position of the blades of wind turbines should contain several sub adjustment.

One of the high-efficiency is present in Figure 1.

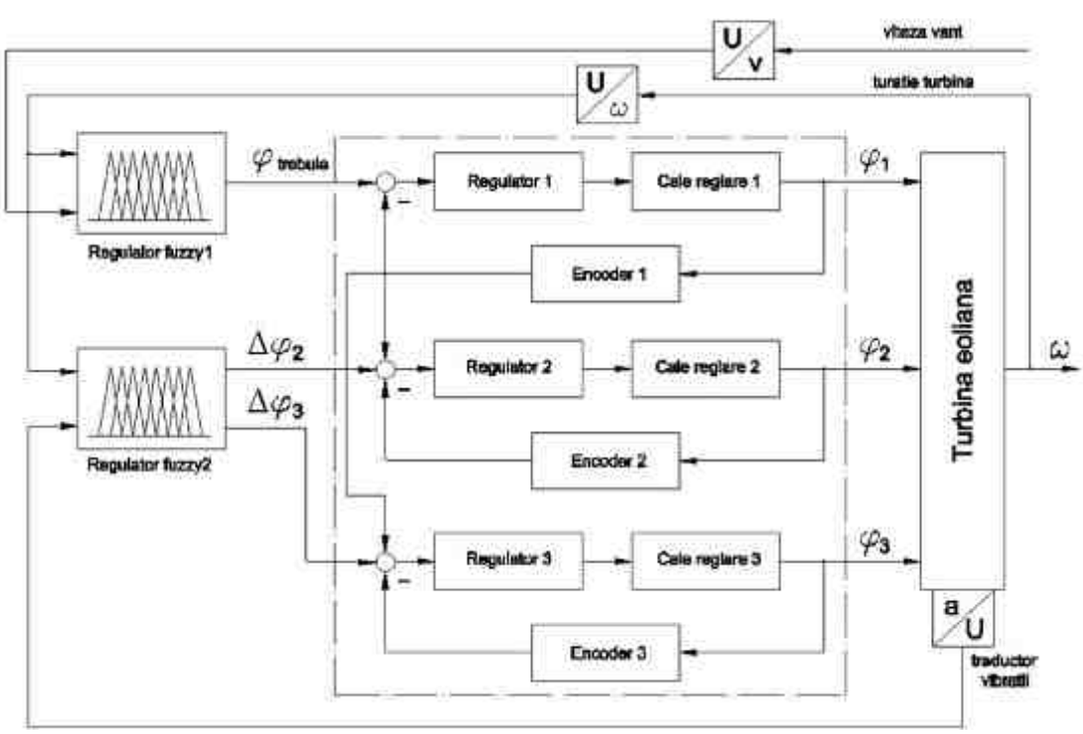

Figure 1. Block diagram for automatic compensation the angle of the blade depending on speed and on vibration level of wind turbine

To fully exploit the wind and to protect the entire system, the turbine speed must be maintained in an optimal field of values. An too low speed level corresponds to a low energetic level(virtually untapped) or make impossible the effective operation of transmission systems and control energy supplied to the consumer. An excessive speed leads to higher levels of vibration, mechanical stress that the above permitted levels of power. A first control system is therefore responsible for maintaining speed in the optimum value. This system of adjustment is relatively slow and does not require a high degree of accuracy (not necessary for example to maintain constant speed). This is done with two controllers Fuzzy. The first controller made correction speed based on wind speed and current speed of the turbine. This controller provides a primary control signal Ö$_{need}$, which is the control signal for positioning the blade no. 1 considered as a reference. The second controller Fuzzy make angle correction of the turbine blades 2 and 3, as compared with the corresponding blade angle reference no. 1, depending on the speed of the turbine and the vibration level RMS.

This controller provides two control signals based on which provides a fine adjustment around the blade angle reference values. With this correction to compensate for any dynamic imbalance due to inherent differences between the rotor blades construction. This system work to minimize vibration levels.

The second control system functions as automatic system angles by measuring them with appropriate transducers, comparing with control signals provided by Fuzzy controllers, process deviations by the regulators and regulating the generation of control signals for adjusting routes. The automatic adjustment of the angles is composed of three circuit adjustment.

Thus, adjusting the angle subsystems secondary blades (2 and 3) made a comparison between the actual blade angle reference and the actual blade angle side and provide a signal of departure, upon which the necessary correction angle is achieved.The automatic adjustment of the angles to ensure this time, as appropriate behavior in steady (high positioning accuracy) and a phase characterized by a response time as short and without supra-oscillations.

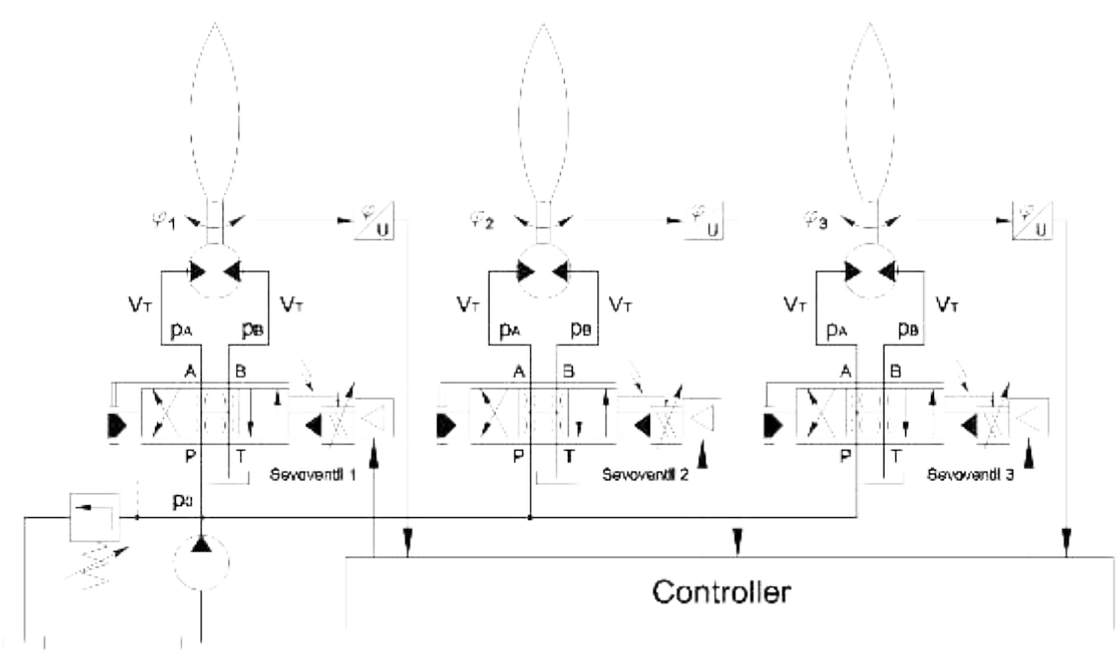

Figure 2. Hydraulic scheme for step change in wind turbines, rotary motors

It can briefly cause additional vibration in the structure of the wind power turbine.
Because the mentioned considerations the plants must be fast enough. They consist of hydraulic circuit controlled resistive (to ensure a superior dynamic behavior), performed using the proportional servo valves. Circuit no. 1 is considered the reference and control signal received.

Automatic circuits 2 and 3 acting as a tracking system blade angle reference. The items are either operated rotary hydraulic motor (Figure 2) or linear hydraulic motors (Figure 3).

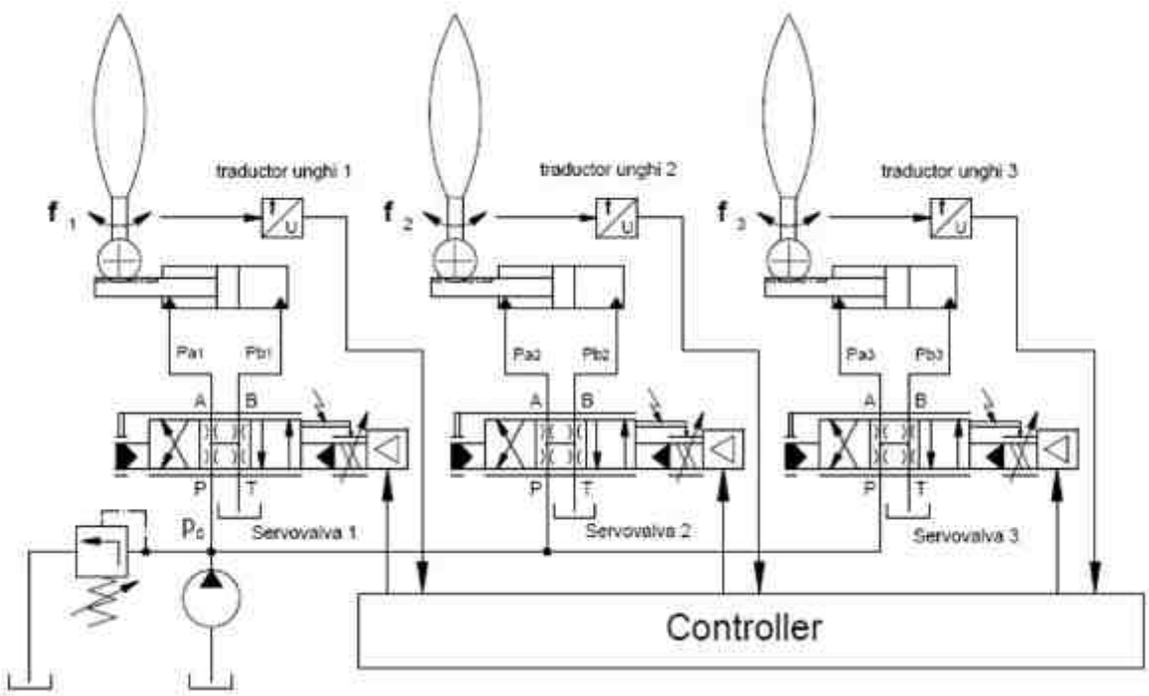

Figure 3. Hydraulic scheme for step change in wind turbines, linear motors

The variant with rotary motors is advantageous because the blades are coupled directly to motor shafts. This type of connection requires radial arrangement of the motors in relation to the axis of the turbine and therefore increase the dimensions of the assembly. The variant with linear motors is more compact because of their positioning parallel to the axis of the turbine. The disadvantage is here that the paddle movement is broadcast via a gear (possible clearance, higher costs).

2. Testing by numerical simulations the blade angle correction of the wind turbine systems

a. Simulation of fuzzy controller for the turbine blade angle correction to maintain **the speed in a optimum field of values**

Fuzzy control system to maintain turbine speed in an optimum field of values is shown in Figure 4.

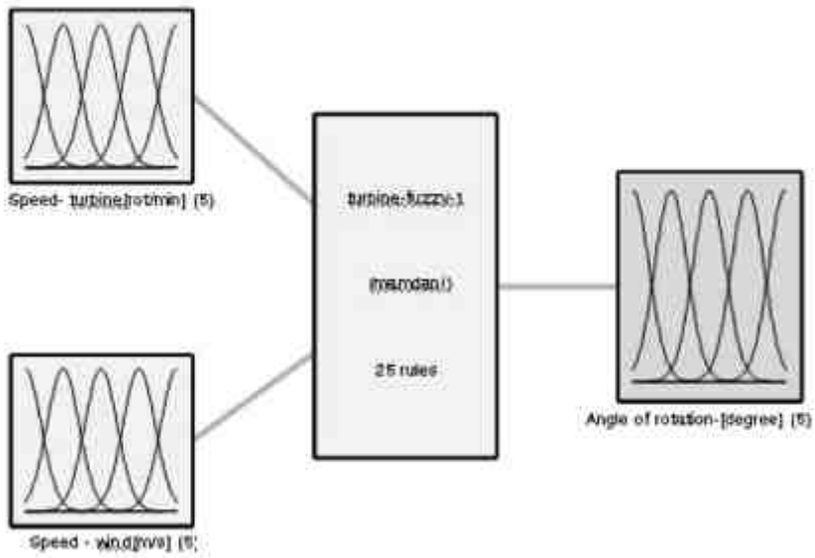

Figure 4 Fuzzy system to determine the optimal angle of inclination of the blades

The fuzzification of the input and output quantities is represented in Figures 5, 6 and 7, where the functions of states are Gauss type.

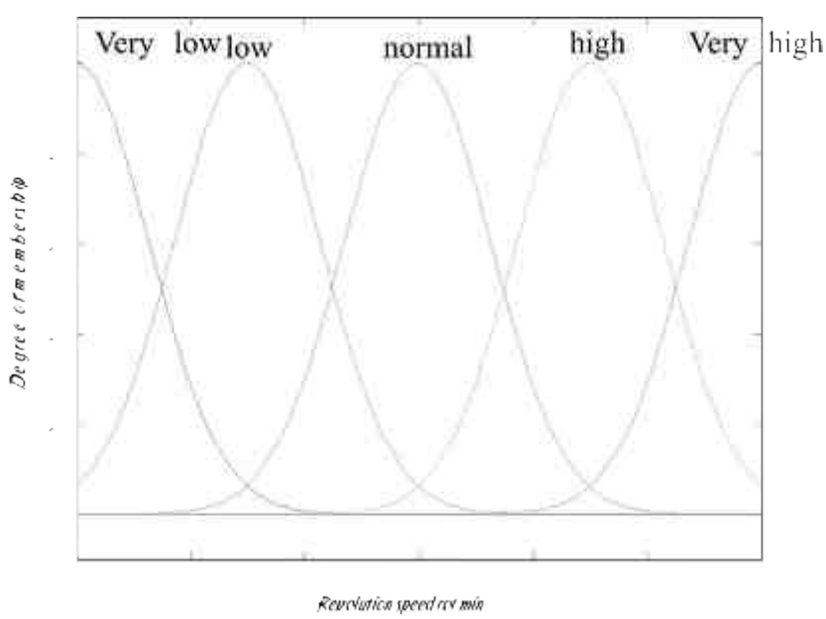

Figure 5. Input value fuzzification revolution speed of the turbine [rot/min]

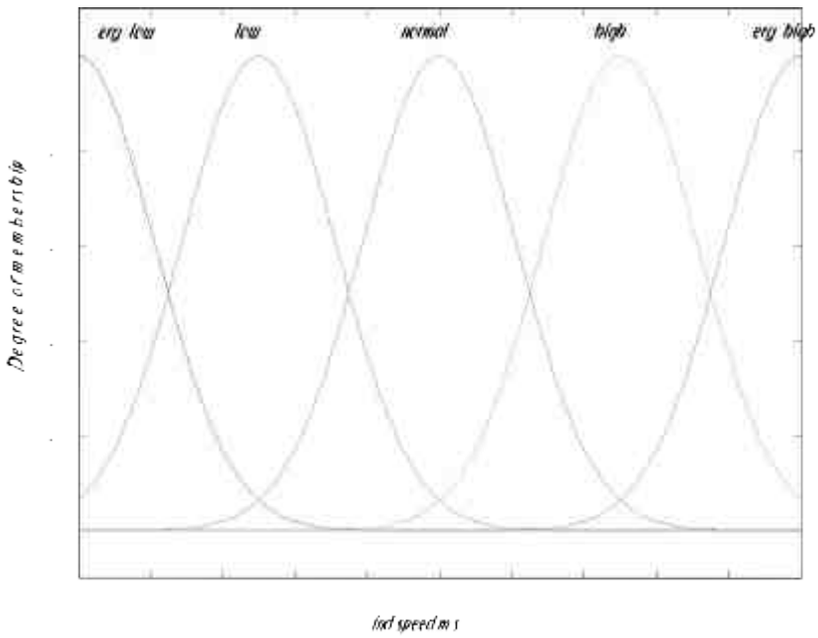

Figure 6. Input value fuzzification speed of wind

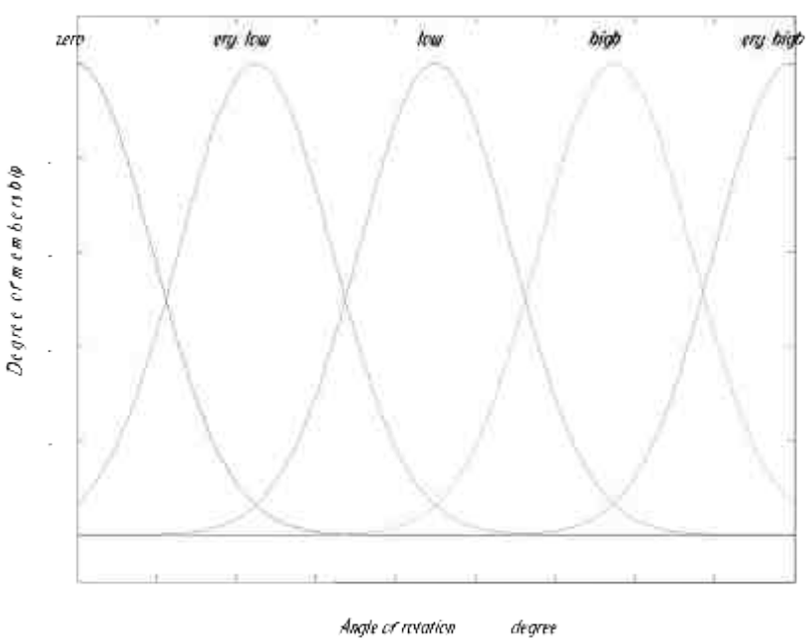

Figure 7. Output value fuzzification angle of rotation

Fuzzy processing base consists of 12 linguistic rules as follows:

1. If (revolution speed[rot/min] is very low) and (wind speed[m/s] is very low) then (angle of rotation[degree] is zero) (1)
2. If (revolution speed[rot/min] is very low) and (wind speed[m/s] is low) then (angle of rotation-[degree] is zero) (1)
3. If (revolution speed[rot/min] is very low) and (wind speed[m/s] is normal) then (angle of rotation-[degree] is very low) (1)
4. If (revolution speed[rot/min] is very low) and (wind speed[m/s] is high) then (angle of rotation-[degree] is very low) (1)
5. If (revolution speed[rot/min] is very low) and (wind speed[m/s] is very high) then (angle of rotation-[degree] is very low) (1)
6. If (revolution speed[rot/min] is low) and (wind speed[m/s] is very low) then (angle of rotation-[degree] is zero) (1)
7. If (revolution speed[rot/min] is low) and (wind speed[m/s] is low) then (angle of rotation-[degree] is very low) (1)
8. If (revolution speed[rot/min] is low) and (wind speed[m/s] is normal) then (angle of rotation-[degree] is very low) (1)
9. If (revolution speed[rot/min] is low) and (wind speed[m/s] is high) then (angle of rotation-[degree] is low) (1)
10. If (revolution speed[rot/min] is low) and (wind speed[m/s] is very high) then (angle of rotation-[degree] is low) (1)
11. If (revolution speed[rot/min] is normal) and (wind speed[m/s] is very low) then (angle of rotation-[degree] is very low) (1)
12. If (revolution speed[rot/min] is normal) and (wind speed[m/s] is low) then (angle of rotation-[degree] is low) (1)
13. If (revolution speed[rot/min] is normal) and (wind speed[m/s] is normal) then (angle of rotation-[degree] is low) (1)
14. If (revolution speed[rot/min] is normal) and (wind speed[m/s] is high) then (angle of rotation-[degree] is high) (1)
15. If (revolution speed[rot/min] is normal) and (wind speed[m/s] is very high) then (angle of rotation-[degree] is high) (1)
16. If (revolution speed[rot/min] is high) and (wind speed[m/s] is very low) then (angle of rotation-[degree] is low) (1)
17. If (revolution speed[rot/min] is high) and (wind speed[m/s] is low) then (angle of rotation-[degree] is low) (1)
18. If (revolution speed[rot/min] is high) and (wind speed[m/s] is normal) then (angle of rotation-[degree] is high) (1)
19. If (revolution speed[rot/min] is high) and (wind speed[m/s] is high) then (angle of rotation-[degree] is high) (1)
20. If (revolution speed[rot/min] is high) and (wind speed[m/s] is very high) then (angle of rotation-[degree] is very high) (1)
21. If (revolution speed[rot/min] is very high) and (wind speed[m/s] is very low) then (angle of rotation-[degree] is high) (1)
22. If (revolution speed[rot/min] is very high) and (wind speed[m/s] is low) then (angle of rotation-[degree] is high) (1)
23. If (revolution speed[rot/min] is very high) and (wind speed[m/s] is normal) then (angle of rotation-[degree] is high) (1)
24. If (revolution speed[rot/min] is very high) and (wind speed[m/s] is high) then (angle of rotation-[degree] is very high) (1)
25. If (revolution speed[rot/min] is very high) and (wind speed[m/s] is very high) then (angle of rotation-[degree] is very high) (1)

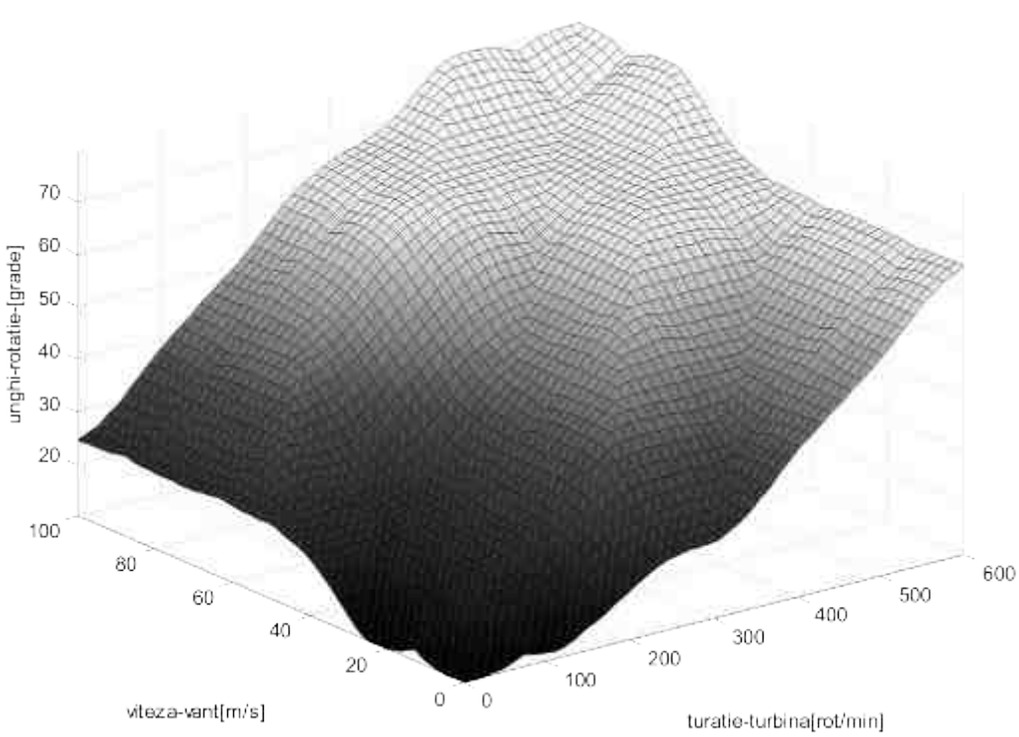

Figure 8. Nonlinear fuzzy function to determine the optimal inclination angle of the blades

b. Simulation of fuzzy controller to compensate the positioning errors of the blades angle depending on the speed turbine and the RMS level of vibration

The control system to compensate the positioning errors of the blades angle depending on the speed turbine and the RMS level of vibration is shown in figure 9.

It has two entries, corresponding to the signals from vibration transducers and speed transducer, two output corresponding to control signals for fine compensate the angles of wind turbine secondary blades.

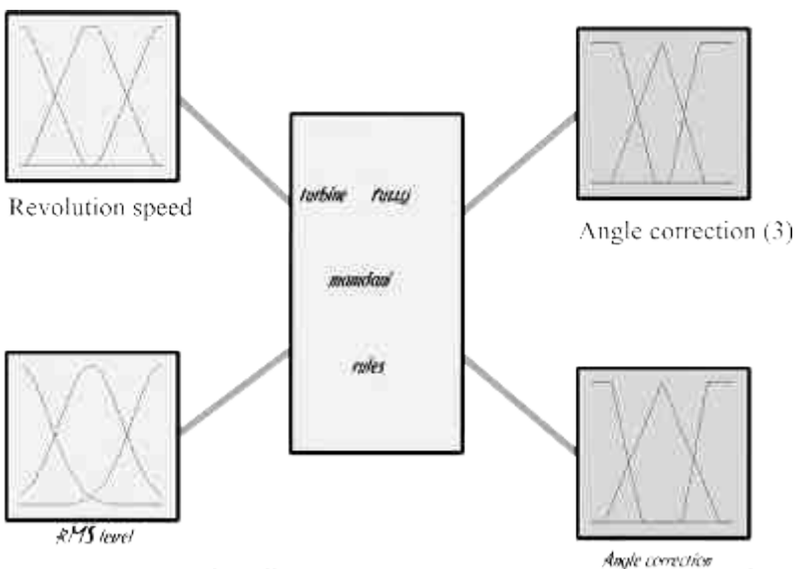

Figure 9. Fuzzy control system for offset angles depending on speed and RMS level of vibration

The fuzzification of the input and output values are shown in figure 10, 11, 12, 13.

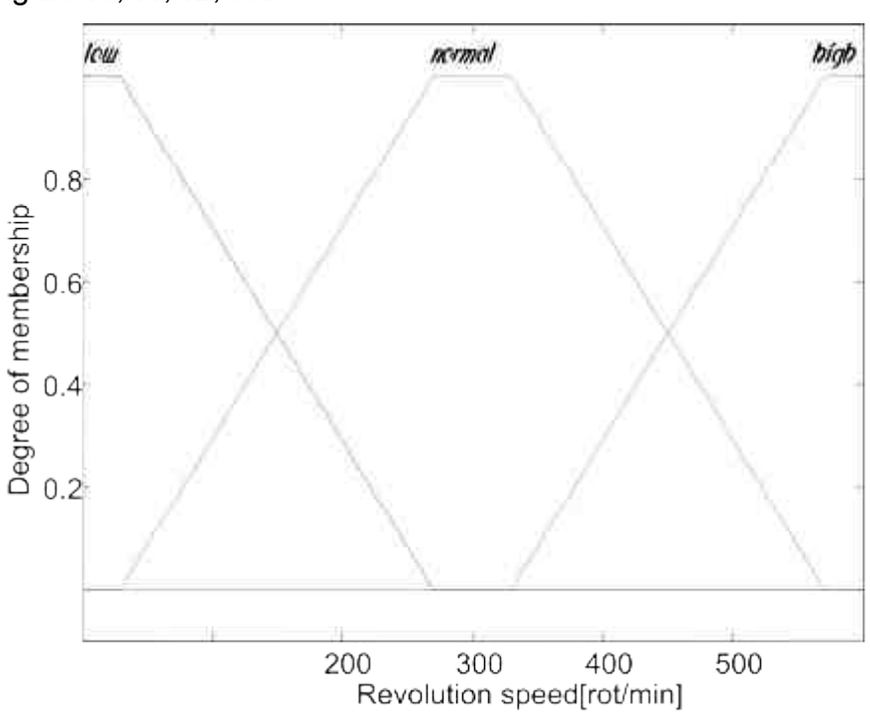

Figure 10. Input value fuzzification - revolution speed

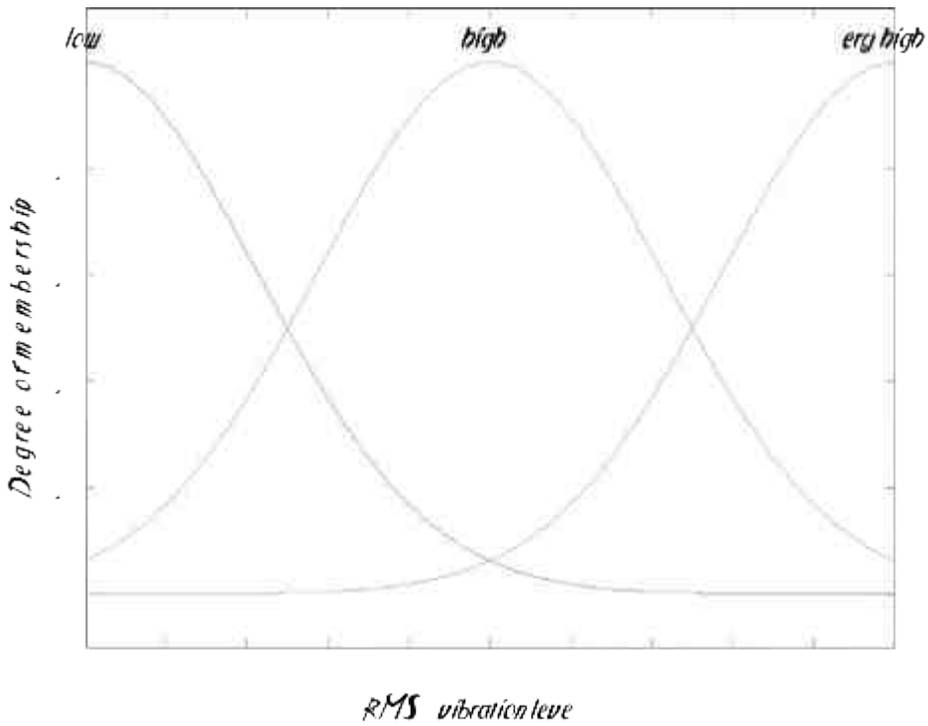

Figure 11. Input value fuzzification - RMS vibration level

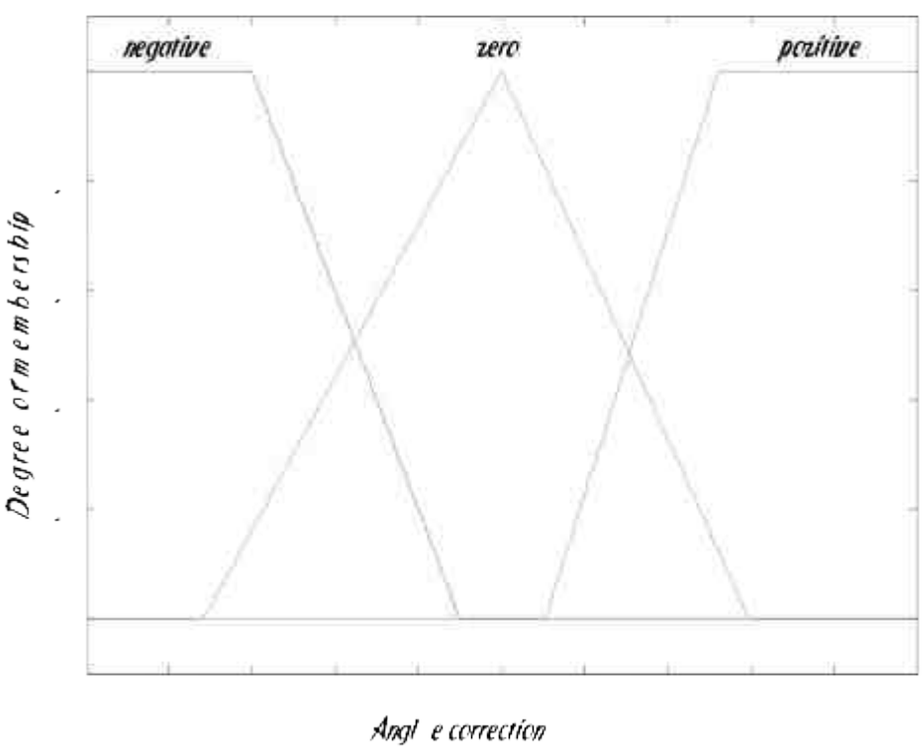

Figure 12. Output value fuzzification - Angle correction of blade number two

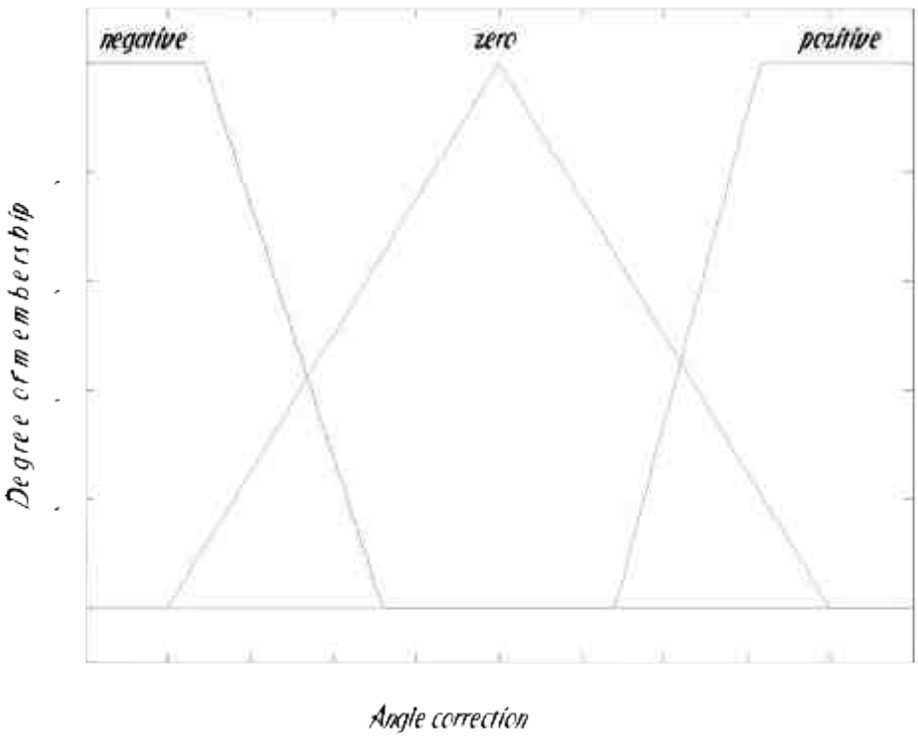

Figure 13. Output value fuzzification - Angle correction of blade number three

In figures 14 and 15 are represented the nonlinear functions performed by the fuzzy processor for compensating secondary blade angle, depending on speed and RMS level of vibration.

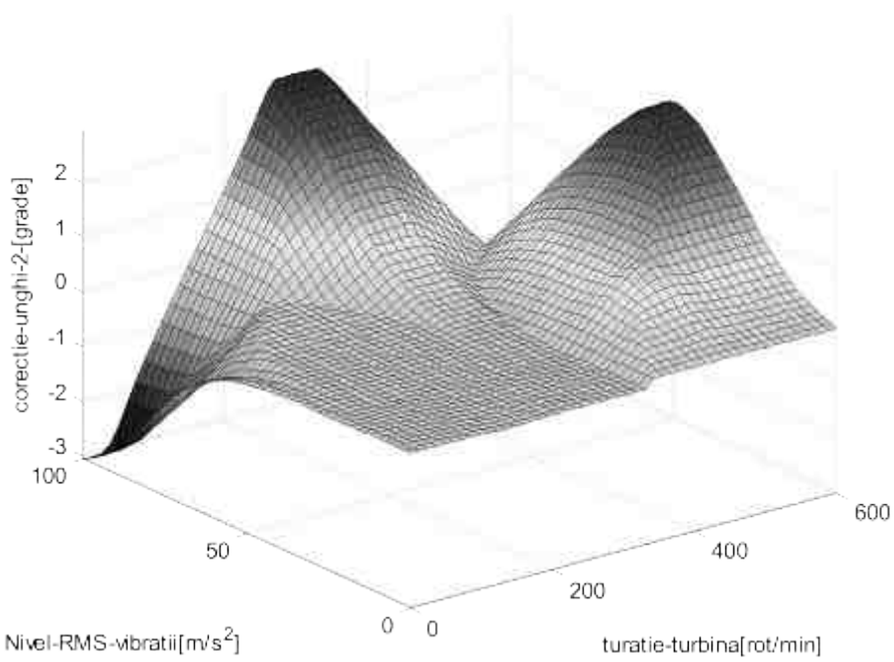

Figure 14. Nonlinear function for compensating secondary blade angle

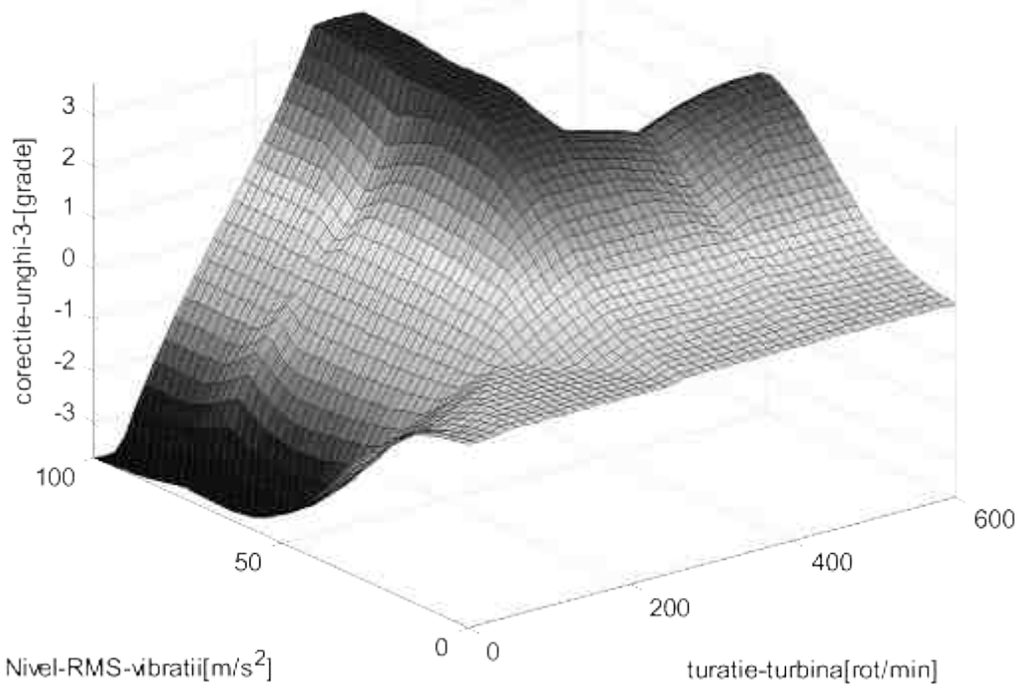

Figure 15. Nonlinear function for compensating number three blade angle

Bibliografie:

1. Backe W. - Steuerungs- und Schaltungstechnik, Institut für hydraulische und pneumatische Antriebe und Steuerungen der RWTH, Aachen, Germania, 1987.
2. Backe W. Grundlagen der Ölhydraulik, Umdruck zur Vorlesung RWTH Aachen, 8. Auflage, Germania, 1992.
3. Backé, W., Servohydraulik, Umdruck zur Vorlesung RWTH Aachen, 6. Auflage, Germania, 1990.
4. Bu F., Yao B., Desired Compensation Adaptive Robust Control of Single-rod Electro-hydraulic Actuator, School of Mechanical Engineering, Purdue University, West Lafayette, IN 47907.
5. Deacu L., Rădulescu M., Banabic D., Raţiu C., Tehnica hidraulicii proporţionale, Ed. Dacia, Cluj-Napoca, 1989.
6. Deacu, L., Năcuţiu L., Asupra reglajului automat de vitezã a motoarelor hidraulice, Buletin informativ HIDRAULICA, Institutul de cercetări pentru hidraulicã şi pneumaticã, Bucureşti, 1997.
7. Eryilmaz B., Improved Nonlinear Modeling and Control of Electro-Hydraulic Systems, Thesis for the degree of Doctor of Philosophy, The Department of Mechanical, Industrial, and Manufacturing Engineering, Northeastern University, Boston, Massachusetts, August 2000.
8. Fees G., Study of the static and dynamic properties of a highly dynamic ER servo drive, Ölhydraulik und Pneumatik, No. 1, 2001.
9. Năcuţiu L., Giurgea C., Concerning nominal flow and pressure to proportional valves, Buletinul ştiinţific al Universităţii Politehnica din Timişoara, a V-a Conferinţa Internaţionalã de Maşini Hidraulice şi Hidrodinamica Timişoara, octombrie 2000, ISSN-1224-6077.
10. Năcuţiu L., Deacu L., Vaida L., Raţiu C., Creşterea performanţelor actuatorilor electrodinamici de comandã a aparaturii hidraulice, Lucrările celui de-al III-lea Simpozion, Metode moderne in ingineria echipamentelor hidro, 27-28 sept. 2001, Ed. Politehnica, ISBN973-8247-45-4, Hidrotim S.A., Timişoara, p. 171.
11. Năcuţiu L., Lageregelung von hydraulischen Zylindern der Fertigungsmaschinen mit Hilfe der Fuzzylogik, Arbeitsbericht, TU Braunschweig, 2004.

12. Nãºcuþiu L., Cercetãri ºi realizãri în vederea creºterii performanþelor statice ºi dinamice ale axelor hidraulice NC, Tezã de doctorat, Cluj-Napoca, 2004.
13. Vaida L., Comanda proporþionalã a pompelor reglabile, Tezã de doctorat, Universitatea Tehnicã Cluj-Napoca, 1999.
14. Vaida, L.,Nãºcuþiu, L., Deacu, L., Stand experimental pentru determinarea caracteristicilor motoarelor hidraulice, Buletin informativ HIDRAULICA, Institutul de cercetãri pentru hidraulicã ºi pneumaticã, Bucureºti, 1999. ISSN/453-7303.
15. Vaida L., Opruþa D., Nãºcuþiu L., Implementarea pompelor si motoarelor reglabile electro-hidraulice în sisteme informatizate de conducere a maºinilor, Lucrãrile celui de-al III-lea Simpozion, Metode moderne în ingineria echipamentelor hidro, 27-28 sept. 2001, Ed. Politehnica, ISBN973-8247-45-4, Hidrotim S.A., Timioara, p. 134.
16. Zudor E.I., Mihalcz I., Baranyi P., Csibi V., Fuzzy Logic Control Method for a SMA Wire Driven Robot Mechanism, Tenth World Congress on the Theory of Machines and Mechanisms, Oulu, Finland, June 20-24, 1999.
17. *** www.mathworks.com, Matlab, Fuzzytoolbox
18. *** www.nordex-online.com, Windturbine
19. *** www.vestas.com, Wind power solutions

CERCETARI ASUPRA COMPORTARII DISTRIBUITOARELOR CU GRADIENT DE ARIE VARIABIL

RESEARCH ON THE OPERATING REGIME OF DIRECTIONAL CONTROL VALVES OF VARIANT SURFACE GRADIENT

Dr. ing. Dragos Daniel ION GUTA*

**INOE 2000 -IHP*

Abstract:*Simulating the operating regime of the systems or subsystems represents an important step in design proces. Obtaining some mathematical models, as close as possible to the physical phenomena that are to be reproduced or improved, helps in making decisions regarding the way of optimizing them. Benefiting from the means of process identification and the power of computers, researchers can shorten the application development period in several domains, by generating a solution that is close enough to reality starting from the design phase. Introducing computers in supervising and leading processes determination the change of the technological systems. The high degree of flexibility they offer allows the "software optimization" of the systems.*

Este greu de imaginat in prezent analiza unui sistem dinamic complex fara a beneficia de posibilitatea de a modela / simula respectivul sistem. Modelarea si simularea sistemelor dinamice sunt tehnici larg utilizate in analiza asistata de calculator a sistemelor, constituind in acelasi timp un pas important in procesul de conceptie asistata de sistemele de calcul.

Simularea numerica a sistemelor dinamice reprezinta procesul prin intermediul caruia se obtin, cu ajutorul calculatorului numeric, informatii despre comportarea in timp a marimilor caracteristice ale sistemelor. Simularea numerica a sistemelor dinamice permite obtinerea informatiilor necesare privind comportarea acestora pe baza modelelor matematice ce descriu sistemele respetive. Pentru micsorarea timpului necesar dezvoltarii modelelor de simulare se pot utiliza limbaje de modelare si simulare grafice.

1. Modelarea matematica

Din punct de vedere al teoriei sistemelor automate, distribuitoarele hidraulice sunt amplificatoare mecanohidraulice care transformã deplasarea sertarului în debit. Comportarea unui astfel de echipament în regim staþionar poate fi exprimatã prin relaþia:

$$F(p_s, x, Q_m, P_m) = 0 \qquad (1)$$

în care x este deplasarea sertarului faþã de poziþia neutrã de funcþionare; Q_m debitul mediu al racordurilor motorului hidraulic; P_m cãderea de presiune pe motorul hidraulic; p_S presiunea sursei de alimentare, consideratã constantã.

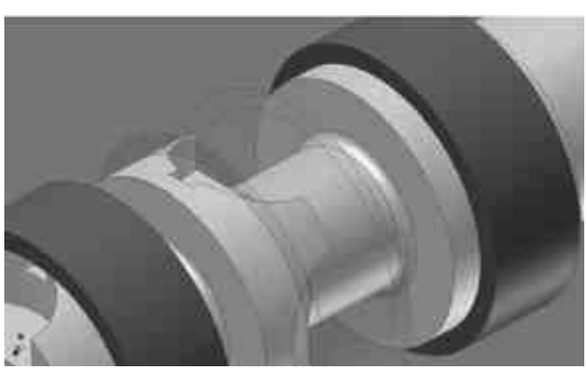

Fig. 1. Sertar distribuitor pilotat Bosch NG 25

Se considerã un distribuitor cu centrul inchis, cu 4 (cãi) / 3 (poziþii de lucru), cu ferestre de distribuþie compuse (fig.2). Aceasta varianta constructiva corespunde distribuitorului NG 25 produs de firma Bosch-Rexroth. Utilizarea distribuitoarelor cu ferestre de laminare compuse permite micºorarea factorului de amplificare in debit in jurul nulului, mãrind stabilitatea servomecanismului din care face parte.

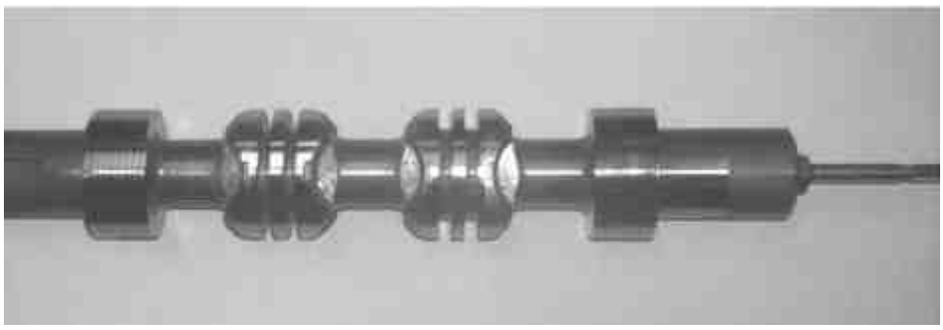

Fig. 2.a Sertarul etajului de putere al distribuitorului NG 25 Bosch-Rexroth

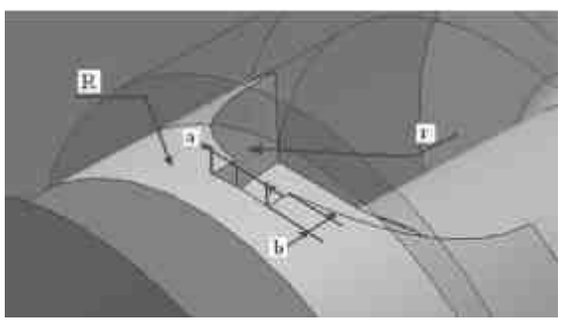

Fig. 2.b Geometria ferestrelor de distribuţie ale sertarului principal NG 25

Caracteristicile geometrice ansamblului bucşă - sertar sunt: D=2R diametrul sertarului principal; d = 2r - diametrul fereastrelor de distribuţie circulare ; a lăţimea ferestrelor de distribuţie dreptunghiulare ; b lungimea ferestrelor de distributie dreptunghiulare. Se introduc următoarele notaţii :

$$\begin{aligned} c_{x1} &= b \\ c_{y1} &= R \cdot \arcsin(0.5 \cdot a / R) \\ c_{x2} &= b + \sqrt{r^2 - (c_{y1} \cdot r / c_{y2})} \\ c_{y2} &= R \cdot \arcsin(r / R) \end{aligned} \tag{2}$$

$$f(x) = \begin{cases} c_{y1}, & x \in (0, b) \\ \dfrac{c_{y2}}{r} \cdot \sqrt{r^2 - x^2}, & x \in (b, c_{x2}) \end{cases} \tag{3}$$

Legea de variatie a ariei de curgere in funcţie de cursa sertarului este:

$$A(x) = \begin{cases} 2 \cdot c_{y1} \cdot x, & x \in (0, b) \\ 2 \cdot \dfrac{c_{y2}}{r} \cdot \int_b^{c_{x2}} \sqrt{r^2 - x^2}\, dx, & x \in (b, c_{x2}) \end{cases} \tag{4}$$

Variatia ariei orificiilor distribuitorului in raport cu deschiderea acestuia este prezentatã în figura 3. Domeniul I reprezinta zona in care curgerea se realizeaza prin ferestrele dreptunghiulare (in jurul nulului) iar domeniul II corespunde curgerii prin cele doua ferestre de distributie (aria dreptunghiulara şi aria cvasieliptica formata prin intersectia a doua corpuri cilindrice).

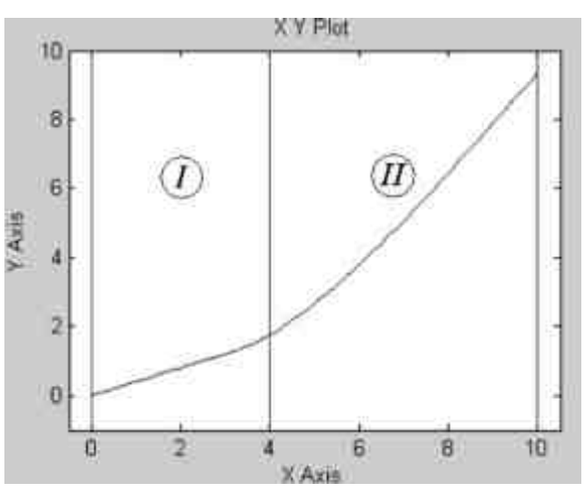

Fig. 3. Variatia ariei orificiilor în funcţie de deplasarea relativa dintre sertar si bucsa

Corespunzãtor acestei curbe, evoluþia debitului în funcþie de tensiunea de comandã a pilotului distribuitorului are aspectul din figura 4.

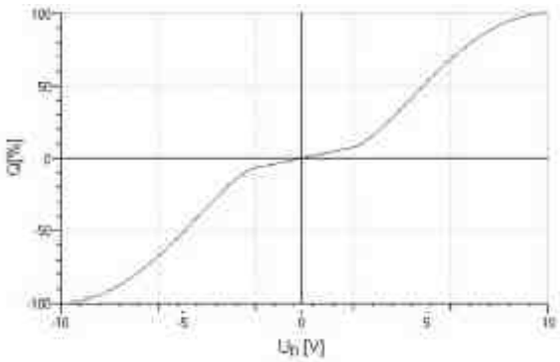

Fig. 4. Variaþia debitului în funcþie de tensiunea de comanda

Caracteristica de regim staþionar a distribuitorului este:

$$Q = c_d \cdot A(x) \cdot \sqrt{\frac{p_s}{\rho}\left(1 - \frac{x}{|x|} \cdot \frac{p}{p_s}\right)} \qquad (5)$$

Pentru cele doua domenii de functionare, debitul se calculeazã cu relaþiile :

$$Q(x) = \begin{cases} c_d \cdot 2 \cdot c_{y1} \cdot x \cdot \sqrt{\frac{p_s - p}{\rho}}, & x \in (0, b) \\ c_d \cdot 2 \cdot \left(c_{y1} b + \frac{c_{y2}}{r} \cdot \int_b^{c_{y2}} \sqrt{r^2 - x^2}\, dx \right) \cdot \sqrt{\frac{p_s - p}{\rho}}, & x \in (b, c_{x2}) \end{cases} \qquad (6)$$

Factorul de amplificare in debit depinde de domeniul de funcþionare :

$$K_{Qx} = \frac{\partial Q}{\partial x} = \begin{cases} c_d \cdot 2 \cdot c_{y1} \cdot \sqrt{\frac{p_s - p}{\rho}}, & x \in (0, b) \\ c_d \cdot 2 \cdot \frac{c_{y2}}{r} \sqrt{r^2 - x^2} \cdot \sqrt{\frac{p_s - p}{\rho}}, & x \in (b, c_{x2}) \end{cases} \qquad (7)$$

Coeficientul debit-presiune se calculeazã cu relaþiile:

$$K_{QP} = \frac{\partial Q}{\partial P} = \begin{cases} \frac{c_d \cdot 2 \cdot c_{y1} \cdot x}{\sqrt{\rho (p_s - p)}}, & x \in (0, b) \\ \frac{c_d \cdot A(x)}{\sqrt{\rho (p_s - p)}}, & x \in (b, c_{x2}) \end{cases} \qquad (8)$$

$$K_P = K_{QP} + K_1$$

2.Simularea numerica a distribuitoarelor cu gradient de arie variabil

Pentru analiza comportarii distribuitoarelor cu gradient de arie variabil s-a utilizat mediul de programare cu interfaþã grafica AMESIM-IMAGINE.

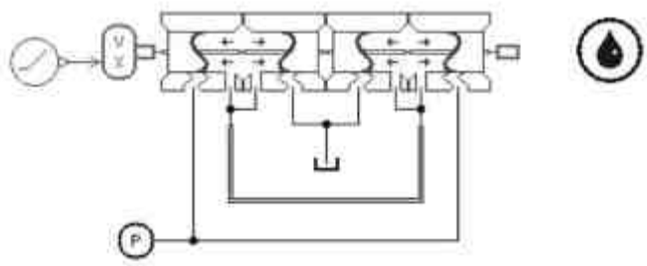

Fig. 5. Ansamblu bucº a-sertar al distribuitorului NG-25 simulat cu programul AMESIM

Pentru elaborarea modelelor de simulare s-au utilizat simboluri standardizate specifice sistemelor de acþionare hidraulicã, predefinite în bibliotecile programului. Datorita structurii bietajate a distribuitorului analizat au fost elaborate doua modele de simulare.

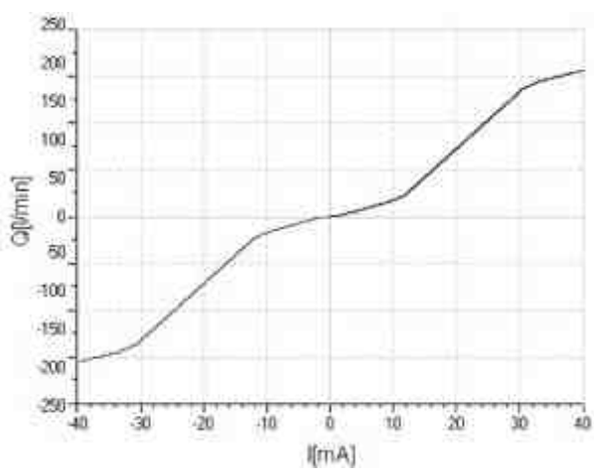

Fig. 6. Caracteristica staticã a etajului de putere Q(I)

Pentru determinarea caracteristicii statice a etajului de putere a fost realizat un model relativ simplu, rolul acestuia fiind numai de a confirma dependenta dintre aria de curgere a ferestrelor de distributie si pozitia sertarului, stabilitã mai sus. Caracteristicile funcþionale ale distribuitorului corespund distribuitorului 4WRLE32V-1000M3X/G24KO/A1M produs de concernul BOSCH-REXROTH [111].

Caracteristica obţinutã este prezentatã în figura 6. ºi indicã legãtura dintre debitul etajului de putere, Q [l/min] ºi curentul de comandã al pilotului, I [mA].

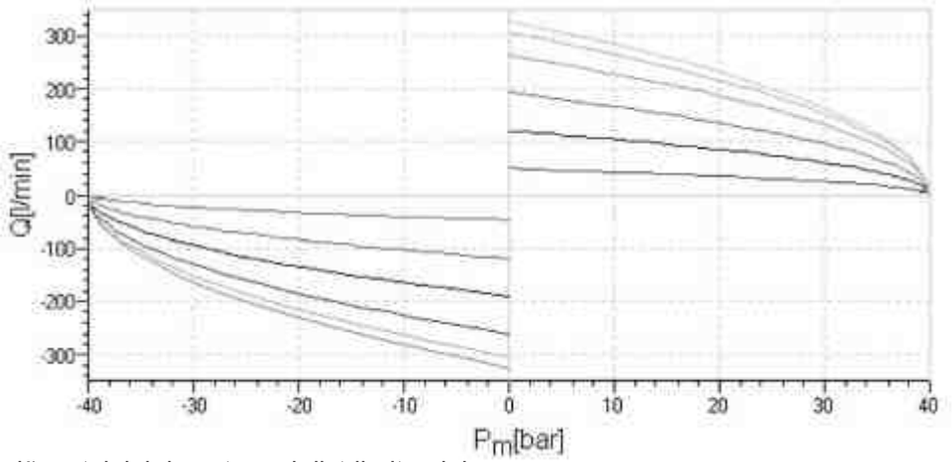

Fig. 7. Caracteristica universalã a etajului de putere al distribuitorului, Q(I, P_m) alimentat la p_s=40 bar

Pentru a realiza simularea numericã a comportarii distribuitorului bietajat a fost realizat modelul din figura 8. Acesta include modelul anterior, modelul etajului pilot din biblioteca mediului de simulare, doua drosele de amortizare corespunzãtoare circuitelor de comandã, sursa de presiune, rezervorul si elementele legãturii de reacţie. Cele doua drosele dispuse intre distribuitorul pilot si cel pilotat au un rol esential in stabilizarea sistemului, evidenţiat ºi de diagramele obtinute prin simulare. Caracteristicile statice ºi dinamice ale servovalvei pilot corespund distribuitorului proporţional de mare vitezã 4WRPEH produs de concernul BOSCH-REXROTH [1].

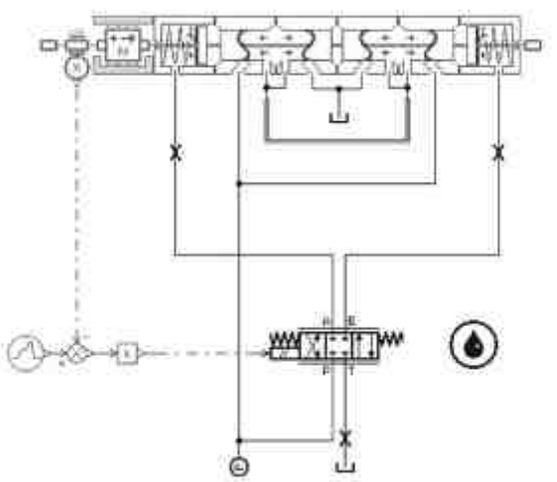

Fig. 8. Reţeaua de simulare numericã a distribuitorului NG 25

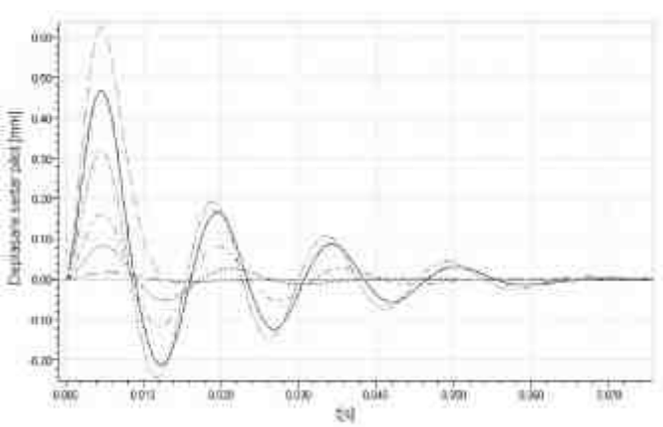

Fig. 9. Evoluţia deplasãrii sertarului pilotului în absenţa droselelor de amortizare pentru diferite semnale de comandã : 20, 40, 60, 80 ºi 100% din U_n

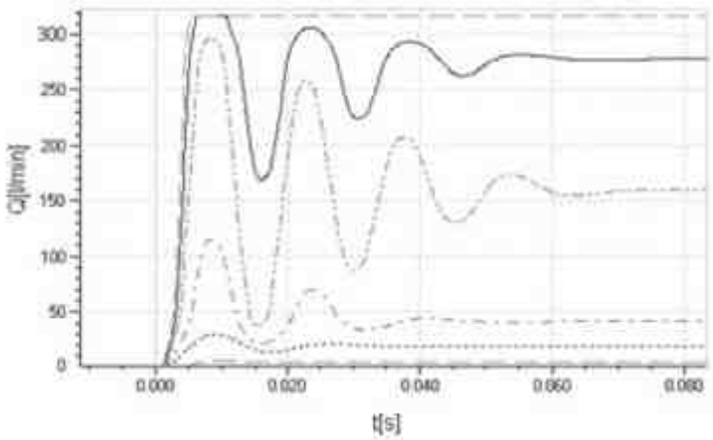

Fig. 10. Evolu ia debitului etajului de putere în absen a droselelor de amortizare pentru diferite semnale de comandã : 20, 40, 60, 80 °i 100% din U_n

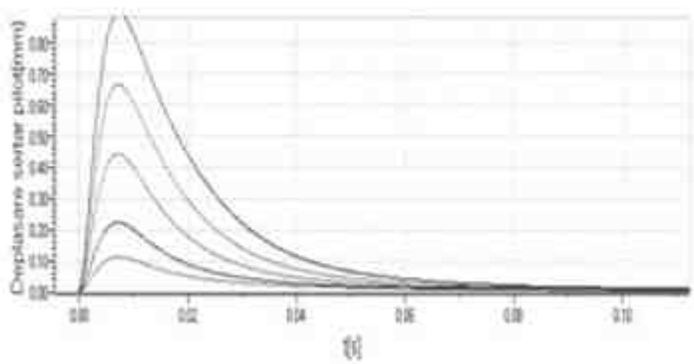

Fig. 11. Evolu ia deplasãrii sertarului pilotului în prezen a droselelor de amortizare pentru diferite semnale de comandã : 20, 40, 60, 80 °i 100% din U_n

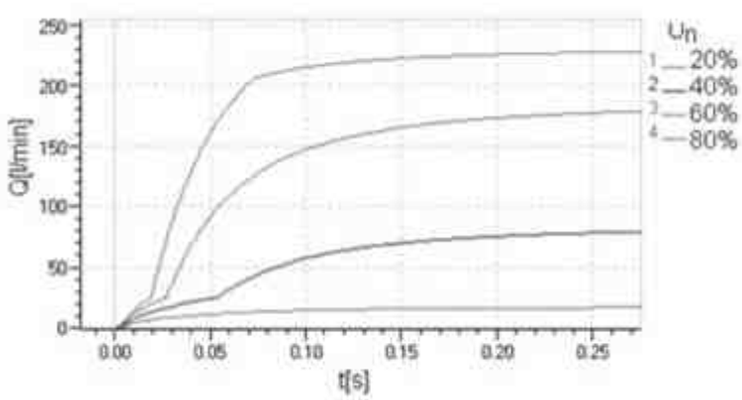

Fig. 12. Evolu ia în timp a debitului etajului de putere la trepte de comanda de 20, 40, 60, °i 80 % din U_n

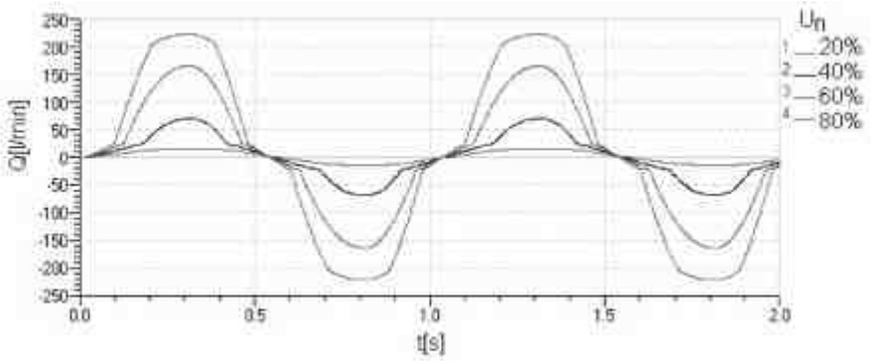

Fig. 13. Răspunsul distribuitorului bietajat la semnal de comanda sinusoidal cu frecvența de 1 Hz și amplitudinea de 25, 50, 75, 100% din U_n (10 V)

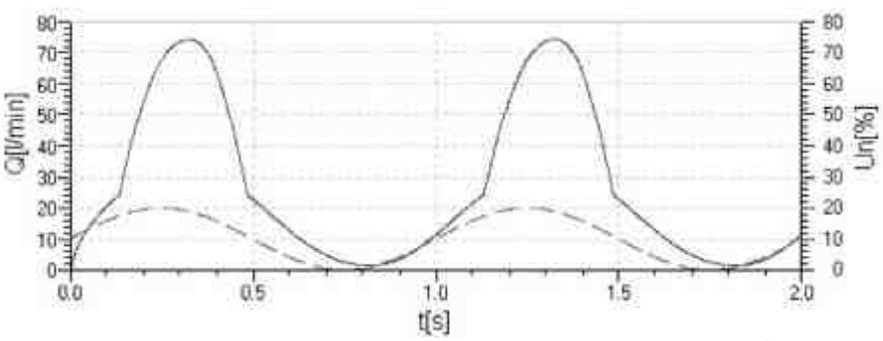

Fig. 14. Evoluția debitului etajului de putere la semnal sinusoidal cu frecvența de 1 Hz și amplitudinea de 25% din U_n (în zona in care se modifică gradientul de arie)

3. Concluzii

Deoarece rezultatele simulărilor numerice corespund informațiilor furnizate de producător, modelul dezvoltat cu ajutorul programului AMESIM poate fi utilizat pentru dezvoltarea unor retele de simulare/modelare a servomecanismelor ce au in componenta lor distribuitoare cu gradient de arie variabil.

Bibliografie

1. **BoschRexrothGroup** - www.boschrexroth.com
2. **Catană, I., Vasiliu, D., Vasiliu, N.** *Acționări hidraulice şi electrohidraulice - Aplicații*. Institutul Politehnic București, 1993.
3. **Catană, I., Vasiliu, D., Vasiliu, N.** *Reglarea maşinilor de forță.* Universitatea POLITEHNICA București, 1995.
4. **Catană, I., Vasiliu, D., Vasiliu, N.** *Servomecanisme electrohidraulice.* Universitatea POLITEHNICA București, 1996.
5. **Călinoiu, C., Vasiliu N., Vasiliu D., Catană I.,** *Modelarea, simularea şi identificarea experimentală a servomecanismelor hidraulice,* Editura Tehnică, București, 1998.
6. **Isbăşoiu, E.C., Georgescu, S.C.** *Mecanica Fluidelor.* Editura Tehnică, București, 1995.

EXTRAHARD MATERIALS DYNAMICS COMPRESSION BEHAVIOR CHECKING SYSTEM

SISTEMUL PENTRU VERIFICAREA COMPORTĂRII DINAMICE A MATERIALELOR EXTRADURE

Ing. Aurel ZAPCIU

INCDMTM, Sos. Pantelimon 6-8, Bucuresti, E-mail:zapciua@yahoo.com

Abstract*: The carrying out of the system helps super-abrasives producers to improve their technology by offering data on the influence that impurities have on the raw material, on the un-controlled incensement, on the shape, brightness imperfections, preferential cleavage planes, on the fragility and, implicitly, on the resistance to compression.*

The system offers a new dynamic resistance to compression checking that is aimed at covering the real demands within the industrial practice.

The checking stand is made up of a body on which the compression mechanism is placed. This is composed from 2 squeegees (a fixed one and one placed on a mobile skid) that circulate in opposite senses and are acted by a snail motoreducer. Between the squeegees, syntethic diamond crystals enter undifferentiated that purge the mobile squeegee that is in contact with a force cell by means of the skid.

The electrical signal obtained is amplified by means of an acquisition plate and is being processed by the electronic computer that outputs, by using a dedicated soft, the medium compression resistance of the controlled diamond crystal lot.

Keywords: Dynamic behavior, compression, extrahard materials.

1. INTRODUCERE

Sistemul performant pentru verificarea comportării dinamice a materialelor extradure este destinat pentru verificarea celei mai importante caracteristici ale diamantelor sintetice si anume rezistenta la compresiune in vederea clasificarii cristalelor pe grupe de utilizare in functie de materialul de prelucrat.

2. CUPRINS

In prezent la singurul producator de materiale superabrazive din Romania si Europa centrala si de sud-est, SC RAMI DACIA SA Bucuresti, controlul din punct de vedere al rezistentei la compresiune al superabrazivilor se face spargand granula cu granula folosind o presa hidraulica, masurand forta de spargere in mod static, rezultatele unui lot de diamante prelucrandu-se dificil si in timp indelungat si in final incertitudinea de masurare este mare.

O alta metoda care se practica pe plan european si international consta in spargerea unei cantitati de diamante intr-o moara cu bile prin vibrare si masurandu-se procentual cantitatea de granule sparte care se raporteaza la cantitatea de granule intregi. aceasta metoda ofera numai un raspuns calitativ in ceea ce priveste rezistenta la compresiune.

Metoda si instalatia dezvoltata este originala si urmeaza a fi brevetata, timpul necesar experimentarilor se reduce foarte mult, este exclusa subiectivitatea prin interventia umana, softul si utilizarea calculatorului electronic ofera o imagine obiectiva prin utilizarea spargerii dinamice care se apropie de conditiile reale din timpul aschierii folosind scule care inglobeaza materiale superabrazive.

Realizarea „Sistemului performant pentru verificarea comportării dinamice a materialelor extra dure utilizate în industria materialelor de construcţii şi a prelucrării metalelor”, vine în întâmpinarea cerinţelor singurului producător român de superabrazivi uzina RAMI -DACIA Bucureşti, de a se alinia din punct de vedere calitativ la nivelul mondial atins în domeniu.

Sistemul performant pentru verificarea comportării dinamice a materialelor extradure poate fi utilizat in cadrul fluxului de fabricatie a produselor de tip superabraziv la RAMI DACIA Bucuresti dar si la fabricantii de produse abrazive, la institute tehnice de invatamant superior pentru incercare si testare de materiale de tip abraziv si superabraziv.

Dupa brevetarea instalatiei se poate oferi si la export , proiectul aducandu-si astfel contributia la recunoasterea internationala a contributiei romanesti la dezvoltarea tehnologiei de masura si control.

Rezistenta mecanica constituie cel mai important parametru, stând la baza definirii claselor de utilizare a pulberilor de diamant sintetic, funcţie de gradul de tenacitate (respectiv de friabilitate). Rezistenţa este de două tipuri distincte : rezistenţa mecanică la şoc (S.U.A.) şi rezistenţa mecanică la compresiune statică (statele foste C.S.I.).

Rezistenţa mecanică la şoc, a cărei metodologie a fost elaborată de General Electric (denumită FRIATEST) se determină prin raportul de spărturi (ce trec prin sita granulaţiei nominale) rezultate în urma agitării unei cantităţi de pulbere date într-o moară cu bile.

Indicele de friabilitate depinde de dimensiuni, formă, defecte şi impurităţi, iar indicele de tenacitate este:

$$IT = 100 \ IF. \qquad (1)$$

Rezistenţa mecanică la compresiune statică se măsoară pentru fiecare granulaţie, pe minimum 50 granule, iar prelucrarea datelor se face statistic.

Trebuie subliniat că sinteza diamantului nu urmăreşte exclusiv realizarea de diamante cât mai perfecte şi tenace. Cerinţele prelucrării prin abraziune impun combinaţii de la caz la caz, în funcţie de caracteristicile materialului de prelucrat. De exemplu, materialele cu duritate mare (c.m.s.) şi tenacitate apreciabilă nu pot fi prelucrate cu diamante bloc, acestea consumându-se fără a putea preleva din material. Acest fapt obligă utilizarea de granule cu cât mai multe colţuri ascuţite. Acestea se vor rupe repede, oferind cât mai multe muchii şi colţuri vii "pe măsura uzurii", fiind capabile practic să se autoascută.

Această calitate este proprie cristalelor friabile.

Prelucrarea sticlei şi ceramicii necesită diamante cu tenacitate mai ridicată şi cu multe muchii ascuţite, astfel încât prin indentarea materialului să provoace pulverizarea şi antrenarea acestuia.

În ceea ce priveşte debitarea rocilor dure, sau a betoanelor, aceasta are loc în condiţii de sfărâmare a cristalelor minerale dure dar şi friabile. Pentru aceasta sunt necesare, în acest caz, cristalele cele mai tenace şi rezistente la abraziune.

Cele enunţate mai sus sugerează gama largă de aplicaţii ce nu pot fi proprii unei singure categorii de cristale. Programele de sinteză au fost profilate special pentru a satisface toate aceste cerinţe cu privire la tenacitate şi friabilitate.

Fiecare producător are caracteristici proprii de împărţire a sorturilor de diamante, funcţie de clase. Producătorul român, DACIA, este destul de adaptat cerinţelor de proces, criteriului de bază fiind friabilitatea.

2.1 Constructia sistemului

Produsul se refera la constructia unui stand pentru verificarea rezistentei la compresiune a granulelor de superabraziv utilizate in industria materialelor de constructii si a prelucrarii metalelor.

Proiectul reprezinta o lucrare complexa deoarece presupune cunostinte multidisciplinare de natura fizica-mecanica a comportarii materialelor, cunostinte de inginerie mecanica si de automatizare si informatica prin includerea unui soft specializat.

Lucrarea are la baza principiul spargerii granulelor de material care intra cu o orientare aleatorie intre valturile unui minilaminor asupra caruia se pot regla distanta micrometric intre cilindri, forta de spargere fiind preluata prin intermediul unui traductor de forta si inregistrata pe un calculator electronic urmand prelucrarea statistica a datelor obtinute si interpretarea lor (fig. 1, fig. 2a,b, fig. 3)

Calculul fortei se bazeaza pe relatia:

$$F=k. \Delta x \qquad (2)$$

Unde k este constanta elastica a celulei de forta

Äx este deplasarea datorata rezistentei la spargerea cristalului de diamant sintetic

Programul a fost scris in limbajul C++ folosind mediul integrat Microsoft VC 6.0.

Functiile programului sunt:

- achizitie date primare
- determinare valoare maxima in cadrul fiecarei perioade - se considera perioada timpul necesar unei rotatii ;
- reprezentare grafica a valorilor maxime;
- determinarea curbei Gauss

Instalatia se compune dintr-un batiu (1) pe care se afla mecanismul de compresiune format din doi cilindri care se rotesc antagonic prin intermediul unui motoreductor melcat.

Distanta dintre cilindri se poate regla micrometric cu ajutorul unui surub cu pas fin plasat in spatele mesei mobile. Granulele de superabraziv intra intre valturi (2) in mod aleator in ritm de 1 buc./sec.,este preluat de cilindri si comprimate pana la spargere.

Forta de compresiune impinge partea centrala a unei celule de forta (4)ce ce dezechilibreaza o punte Winston . Semnalul este amplificat de amplificatorul (6),este preluat de placa de achizitie (7) si prelucrat de calculator, care face prelucrarea statistica a rezultatelor ,traseaza curba Gauss si calculeaza forta medie de compresiune.

Standul de incercari se prezinta intr-o constructie compacta, robusta, foloseste tehnica informatizata in achizitia si prelucrarea datelor, interventia factorului uman fiind minima.

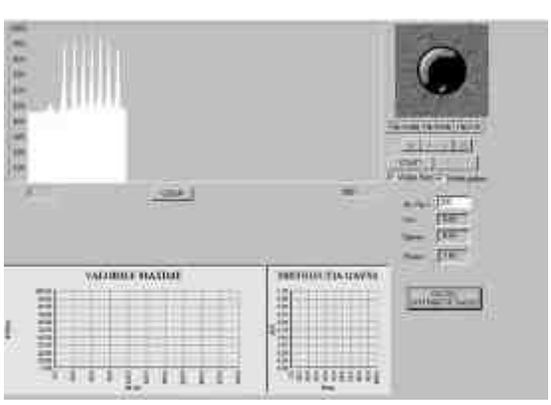

Figura 3 Pagina de achizitii date

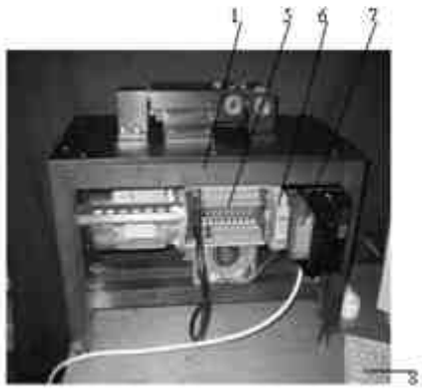

Figura 1. Stand de incercari la compresiune

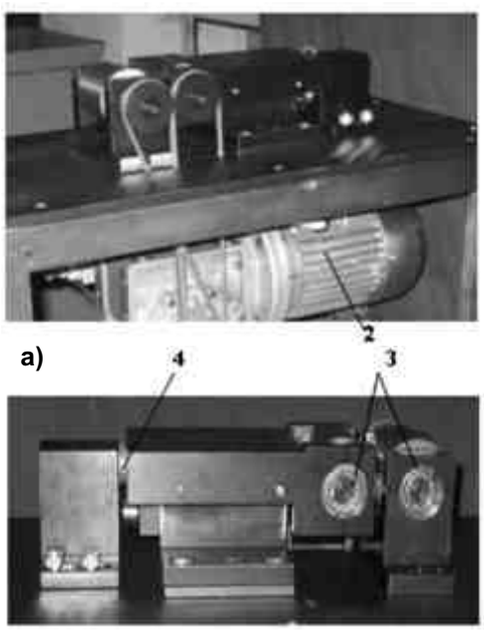

Figura 2 a -b Stand de incercari la compresiune (vedere partea de antrenare si compresiune)

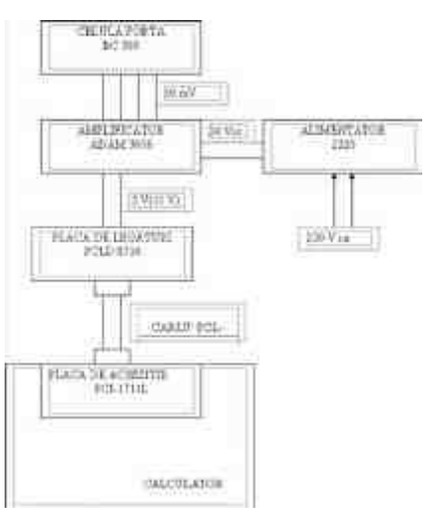

Figura 4 Schema bloc a legaturilor intre componentele electronice

1. batiu realizat in constructie sudata
2. motoreductor de antrenare role din c.m.s. cu urmatoarele caracteristici :
- putere 0,25 kW
- turatie. 23 rot/min
3. subansamblu mecanic de antrenare si spargere a cristalelor din superabrazivi
4. celula de forta cu urmatoarele caracteristici:
- alimentare curent de excitatie 5 V
- forta max. de masurat 150 daN.
- sensibilitate 2 mV/ V
- eroare de masurare ± 0,5%
5. placa de legaturi tip PCLD-8710
6 . amplificator de semnal tip ADAM- 3016
7. placa de achizitie tip PCI-1711
8. calculator electronic PC minim -procesor 600 MHz
- memorie RAM 128
- soft specific pentru prelucrarea date

2.2 Caracteristici tehnice

Cinematica	Caracteristici tehnice
Role din cms ce se rotesc antagonic prin intermediul unui motoreductor melcat	-reglaj micrometric intre role -turatie role 23 rot./min. -diametru role Ø60 mm. -masa deplasabila pe ghidaje cu role -masurarea fortei de compresiune se face cu celula de forta tip BC 303, sensibilitate 2 mV/V - motoreductor P=0,25 kW -conducerea procesului de masurare cu ajutorul calculatorului

2.3 Concluzii

Realizarea ºi aplicarea rezultatelor sistemului vine în sprijinul:

- adaptării activităþii unităþilor economice la cerinþele ºi exigenþele pieþei;

-mijloacelor de încercare, măsurare ºi analizã ºi implementarea acestora în producþie pentru a permite evaluarea precisã a caracteristicilor produselor, în condiþiile unui preþ competitiv ºi în condiþiile performanþelor metrologice cerute de UE.

Prin aplicarea rezultatelor proiectului se estimează obþinerea următoarelor efecte:

- realizarea de echipamente de măsurã ºi control la nivel tehnic UE precum ºi metode/ tehnologii de măsurare/ încercare pentru evaluarea conformităþii;

- modernizarea operaþiilor de control ºi inspecþie;

- obiectivizarea operaþiilor de control prin automatizarea procesului de control ºi utilizarea tehnicii de calcul;

- reducerea consumurilor energetice ºi materiale; reducerea numărului de rebuturi;

- diminuarea importurilor de aparate similare;

-extinderea accesului la informare prin dezvoltarea sistemului de diseminare de informaþii;

-păstrarea contactului între unităþi cu profil de cercetare-dezvoltare ºi unităþi cu profil de producþie.

2.4 BIBLIOGRAFIE

1. Coes Jr., L.“Abrasives”, Springer Verlag, 1971
2. Berman, R.“Physical properties of diamond”, Clarendon Press, Oxford, 1965
3. Dimitrov ºi colectiv, B.“Ridicarea productivităþii ºi creºterea eficienþei ºi economice prin utilizarea superabrazivilor sintetici”, I.N.I.D., 1984
4. Gheorghiu, Z.“Cercetări privind otimizarea proceselor de ºi colectiv prelucrare mecanicã cu ajutorul sculelor cu materiale extradure”, I.C.P.M.F. Bucureºti, 1991
5. Holliday, L.“Composite Materials”, Elsevier Publishing Company, New York
6. Marinescu, I. D.“Diamantul ºi aplicaþiile lui”, Ed. Tehnicã, 1985
7. Martin, J. S.;“Verbrauch an Diamant und CBN KörnungenJuchem, H. O.steigt stetig”, Industrie Diamant Rundschun,vol. 23, 1989
8. Smith, N. R.“Industrial Application of the Diamond”, Hutchinsion of London, 1975
9. Vieru, A.“Îndrumar de lucru cu scule diamantate ”,M.I.C.M. D.I.D., 1976
10. Balfour, A. M.“Amber Boron Nitride metal working applications”, De Beers Technical Service Centre, Berkshire, England, 1990
11. General Electric“GE Superabrasives”, General Electric Company, S.U.A., 1991
12. De Beers Industrial“Product Chart”, Shanon, Conty Clare Ireland, 1991
13. Juchem, H. O;“Abrasives Boron Nitride und seine zuhnemendenCooley, B. A Andwendungsmöglichkeiten”, Diamant Information M 32, De Beers Industrie Diamanten, Germania, Düsseldorf, 1991
14. Cooley, B. A.; “Abrasive Machining of Ferrous Metals with Juchem, H. O. Amber Boron Nitride”, Diamond Information L 48, De Beers Industrial Division, Hornbeam Press Ltd, London, 1990.

15. Ingard Kvernes; “Surface Engineering of Diesel Engine Parts, Erich Lugscheider, New Technological Achievements, in powders and Coating Microstructures”, Powder Metallurgy International, A. Verlag Schmid Publication Germany, nr. 3 / 1990
16. Michael Besterci; “Structure and properties of Dispersion Hardened Gerhard Jangg, A l - A l 4 C 3 M a t e r i a l s ”, P o w d e r M e t a l l u r g y International, A. Verlag Schmid Publication Germany, nr. 1 / 1991”
17. *** “F.E.P.A. standard for measuring the relative strengths of saw diamond grifs”, Federation Europeenne des fabricants de produits abrasifs, E d i t i o n 1 , 1 9 9 4
18. *** “Diamond Wire and Disc Saw”, Powder Metallurgy, A. Verlag Schmid Publication Germany, nr. 2 / 1993
19. *** “Perfect Coatings trough Specilist Know how”,Powder Metallurgy International, A. Verlag Schmid Publication Germany, nr. 4 / 1994
20. *** “Non Distructive Density Determination of Sintered Compacts”, Powder Metallurgy International, A. Verlag Schmid Publication Germany, nr. 2 / 1996
21. *** “Kay Industrial Diamond Co”, Catalog de Firmã, S.U.A.
22. *** “Triefus Co”, Catalog de Firmã, Anglia
23.*** “J. K. Smith Co”, Catalog de Firmã, Anglia
24.*** “Bay State Abrasives”, Catalog de Firmã, S.U.A.
25.*** “Wendt Gmbh”, Catalog de Firmã, Germany
26.**“Drendel und Zweiling”, Catalog de Firmã, Germany
27. ***“Tyrolit Schleif mittel werko swarovskiAb.”, Catalog de Firmã, Anglia
27. ***“Norton Comp.”, Catalog de Firmã, S.U.A.
28.*** “Winter & Sohn”, Catalog de Firmã, Germany
29.*** “Diamant Information Arbaiten mit Diamand Schleifscheiben M3 De Beers Industrial Diamond Division M 3, Düsseldorf, Germany, 1987
30*** “Diamant Information Diamand Abrichtwerkzeuge M12”, De Beers Industrial Diamond Division M 3, Düsseldorf, Germany, 1987
31*** “Diamant Information Herstellung und Qualitätskontrolle von feinen Diamantpulvern”, De Beers Industrial Diamond Division M 16, Düsseldorf, Germany, 1988
32*** “Diamant Information Diamantpulvern and Diamantwerkzeuge in der Feinmechanik”,De Beers Industrial Diamond Division M 17, Düsseldorf, Germany, 1989
33*** “Diamant Information Untersuchung der einflussgrössen bein Flachläppen mit Diamant Mikrokörnungen”, De Beers Industrial Diamond Division M 27, Düsseldorf, Germany, 1990
34*** “Diamant Information CDA M, ein neueDiamant Körnung zum Trockenschleifen von Hartmetall”, De Beers Industrial Diamond Division M 35, Düsseldorf, Germany, 1992
35*** “Diamant Information SYNDITE Drahtziehsteine Eingenschaften und Praxisergebnisse”, De Beers Industrial Diamond Division M 40, Düsseldorf, Germany, 1993
36*** “The metalurgy of Diamond Tools”, Div. of Kennametal, 1997
37*** “CDA The New High Performance Diamond Abrasive for Grinding Carbide”, De Beers Tehnical Service Centre Ascot, England, 1989

THE CAVITATION IN ZONE BODY-SPOOL VALVE FOR HYDRAULIC DISTRIBUTOR

CAVITAȚIA ÎN ZONA SERTARULUI CILINDRIC LA DISTRIBUITORUL HIDRAULIC

Victor BALASOIU*; Ilare BORDEASU*; Mircea Octavian POPOVICIU*

"Politehnica" University of Timisoara, Romania
Tel: (+40256403681); (+0726760207) Fax: (+40256403682),
Email: balasoiu89@yahoo.com; balasoiu@mec.upt.ro

Abstract:

The cavitation phenomena which occurring in hydraulic machinery and hydraulic equipments ,is for many years a research topic, which lead to great running improvements of the hydraulic systems. Cavitation occurs in some elements of hydraulic drive devices as a result of great increases of the flow velocity. In distributors it represents the major limits the possibility to reduce the flow capacity beyond some values.

The initiation and the development of the cavitation in hydraulic drive systems present some particularities originated both in the liquid employed (especially mineral oil) and the severe running conditions. The cavitation erosion is generally not a very stressing factor. On the other hand, as a result of important modifications in the characteristics of the working fluid, when the pressure decreases (increasing of the gas and steam content) the running of the system is heavily disturbed.

Having as a start point in general the definition of cavitation coefficients for the directional valves with cylindrical spools. For this definition, there were taken into account all the important aspects of the flow geometry and the elements depending on the fluid nature.

By attentive examinations of the flow through the specific hydraulic resistance it was established a relation to obtain the cavitation reserve of the system.

Key words :cavitation erosion, distributors, hydraulic systems

1. The cavitation phenomenon in distribution section distributor body - spool valve

The hydraulic resistance describe hydraulic system elements with diverse functional role, and the diversity of type construction assures the purpose for their role. The majority of hydraulic resistance works by strangle the flow vein . From this reason the cavitation phenomena can occurs during with increasing speed and the different pressure values in different points of the hydraulic resistance.

In hydraulic distribution apparatus, the cavitation phenomenon occurs in case of command resistance with small aperture, where the speed will be increased , and from Bernoulli equation results that the pressure drops in the case when exists a big drop of pressure on the command resistance.

The distributor hydraulic track is characterized by the distributor body-spool valve geometry, and different type of spool valves geometry. For studying the cavitation regime in hydraulic resistance distributor body-spool valve , the research had focus to determine energetic spectrum of analyse cavitation effect among the hydraulic distribution apparatus [6].

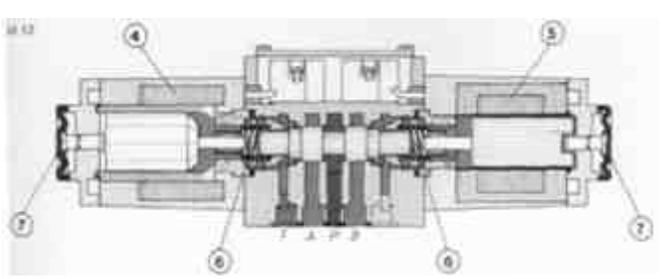

Fig.1. Electrohydraulic distributor

In a series of anatomization Numachi broach the problem of cavitation inside Venturi tubes and inside the diaphragm to determine the cavitation start moment ,by using the relation:

$$\sigma_{inst} = \frac{p_i - p_d}{\Delta p} = \frac{p_i - p_d}{\rho \frac{v_0^2}{2}} \qquad (1)$$

The initiation and the development of the cavitation inside the hydraulic servo valve with cylindrical spool valve is possible due to local flowing conditions ,which can occurs by increasing the speed and lowering the pressure and it is characterized through the cavitation coefficient [1, 2,3,5,6,7,8].

Where: p_2 pressure on the strangled section , p_v the vaporization pressure of the liquid, v_0 the reference medium speed to input. Numachi ,starting from the definition relation of the flow rate coefficient, he determine by experimental the coefficient :

$$C_k = \frac{Q_k \sqrt{1-m^2}}{\frac{\pi}{4} d_2^2 \sqrt{\frac{2g(p_{1k} - p_{2k})}{\gamma}}} \qquad (2)$$

Where: C_k - flow coefficient in cavitation regime Q_k - flow of the cavitation regime ,p_{1k} ,p_{2k} input and output pressure in cavitation regime. In figure 1. its shown the flow coefficient in the commission with the value of the cavitation coefficient .

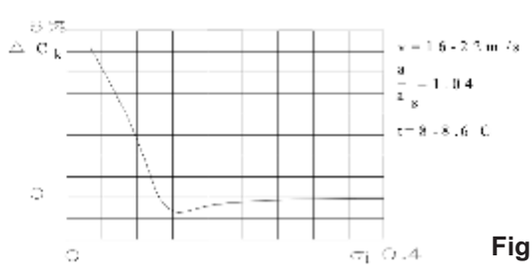

Fig. 2

The spool-valve distributor its characterized by Martin and Wiggert [2] as being made of several hydraulic resistance, which works at high pressure and increasing speed. The most important is high speed jet with circular form, which appears at the exit of adjusting slit through cylindrical room and the exit circuit of apparatus.(Fig 2). If the jet is free for small apertures and two-dimensional flow model, it will reach to a value for flow coefficient Cd of 0.673, and a 69° in ratio with spool-valve axis, calculated by McCloy and Martin in 1973 [3] and Raszga [6].

In distributors with cylinder spool-valves (fig.1)can be notice two types of incipient cavitation correlated to free or attached jet. In case of attached jet can be notice a cavitation development along wall and the cavitation bubbles appears due to increased friction tension near to wall, that leads to a liquid break and appearance of new liquid-gas interface.

For free jet cavitation appears in case when the pressure from the exit room drops below a limit value, but it can be also higher than the value of vaporisation pressure of the employed liquid.

The development of cavitation in distributors with cylindrical spool-valve can be identified by recording dynamical values, which are pulsating pressure in the exit room of circular jet, which represent a different noise from the turbulent jet, to be distinguished in energetic spectrum of measured values.

Martin and Wiggert [4]. Due to development conditions of phenomenal and assumed measurements for experimental appliance. The type of cavitation that appear is developed cavitation, not a gas cavitation that appears in other author's works incriminated.

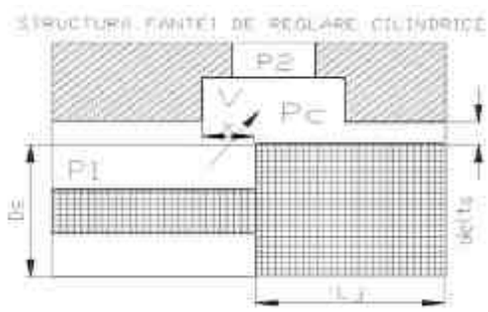

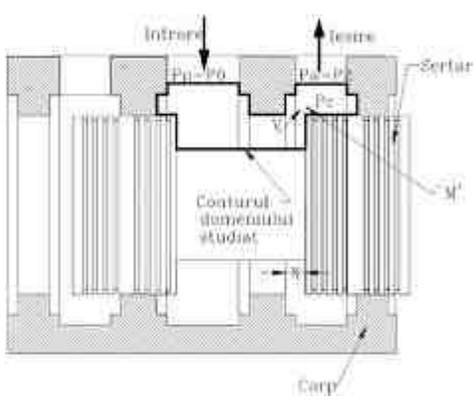

Fig. 3

Point out the presence of dissolved air in 10% has a reduced effect due to short time of existence of cavity in case of cavitation implosion. But they are responsible whit forming of air bubble with high dimensions which can affect system dynamics.

2. Determination for general expression of cavitation coefficient in case for a distributor with cylindric spool-valve.

If we consider the structure of hydraulic trace for a distributor with cylindric spool-valve, in maximum speed assumption, respective lower pressure, appears near to minimal section of trace from the adjusting slit area. (Point M from fig.3)

Making use by cavitation coefficient of distribution section, ratio to input section we obtain:

$$\sigma_{corp0} = \sigma_{D0} = \left(\frac{V_{max}^2}{V_0^2} - 1\right) + \frac{h_{p0M}}{\frac{V_0^2}{2g}} \quad (3)$$

The energetic loses therm can be write starting from the equation of energy transfer, to take into account that the hydraulic loses are preponderant due to perturbation of speed field.

Reference to entrance section we obtain:

$$h_{p0M} = \varsigma_{0M} \frac{V_0^2}{2g} \quad (4.1)$$

The distributor cavitation coefficient became:

$$\sigma_{D0} = \left(\frac{V_{max}^2}{V_0^2} - 1\right) + \frac{h_{p0M}}{\frac{V_0^2}{2g}} = \left(\frac{V_{max}^2}{V_0^2} - 1\right) + \varsigma_{0M} \quad (4.2)$$

Reporting the difference of pressure between in and out, we take input section as reference:

$$\sigma^*_{inst0} = \frac{p_0 - p_V}{\Delta p_{02}} \quad (5)$$

$$\sigma^*_{d0} = \frac{\rho V_0^2}{2\Delta p_{02}}\left[\left(\frac{V_{max}}{V_0}\right) - 1 + \zeta_{0M}\right] \quad (6)$$

for output section considered as reference:

$$\sigma^*_{inst2} = \frac{p_2 - p_V}{\Delta p_{02}} \quad (7)$$

$$\sigma^*_{D2} = \frac{\rho V_2^2}{2\Delta p_{02}}\left[\left(\frac{V_{max}}{V_2}\right) - 1 + \zeta_{M2}\right] \quad (8)$$

Reporting to section ”x” :

$$\sigma^*_{instx} = \frac{p_x - p_V}{\Delta p_{02}} \quad (9)$$

$$\sigma^*_{Dx} = \frac{\rho V_x^2}{2\Delta p_{02}}\left[\left(\frac{V_{max}}{V_x}\right) - 1 + \zeta_{xM}\right] \quad (10)$$

Similar to cavitation coefficient [1,6,7,8] ,the local loosing coefficient signify the energetic looses which emerge on trace of the hydraulic distributor with cylindrical spool valve, due to strong perturbation geometrical structure of the speed field of the inner hydraulic trace.

The major loose it take place in adjusting slit area with x opening. At the slit output appears a drown annular jet in the exit room (“A” or “2”) . In fig. 4 is represented the spectrum of current lines on the all considered domain, and in fig. 5 we have represented a detailed flow structure in adjusting split area. Inquiring the energy transfer equation between section “0” and “f” the local energetic losses coefficient æ$_{0M}$ that appear on hydraulic trace with cylindrical spool valve becomes:

$$\sigma_{M2/0} = \frac{p_f - p_2}{\rho \frac{V_0^2}{2}} - \frac{K_0^2}{K_2^2} + \frac{1}{C_c^2} \cdot \frac{K_0^2}{x^2} \quad (11)$$

The reserved cavitation coefficient in all matters of connote, marking out the difference between cavitation coefficient of installation and the cavitation coefficient of device (apparatus) hydraulic distributor . Long time as the value of reserved cavitation coefficient is positive , the regime of work remain cavitation free.

In the moment when the value of reserved cavitation coefficient is null, the working cavitation regime is incipient , and in one point from the hydraulic trace the pressure drops enough to make possible the air bubble emerge, and the liquid break and the gas vapour development is high enough .

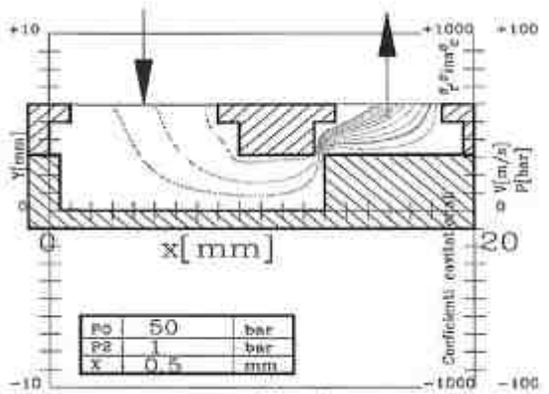

Fig. 4

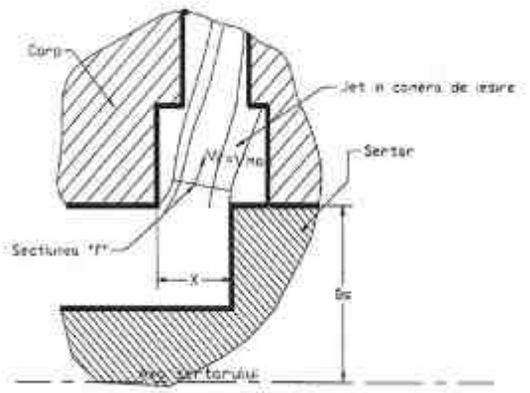

Fig.5

In this working regime and only now, the value of cavitation coefficient of device is equally numeric with value of cavitation coefficient of the distributor , although they differ as analytic relations .From analytic point of view , the characterization of free cavitation regime of incipient, developed and industrial cavitation and super cavitation it is realised. Practical knowledge of coefficients values is difficult by using local values characteristic flowing field through distributor spool valve .The all definition for cavitation coefficient ,in particular for distributor with cylindrical spool valve ,was started from rigorous definition of cavitation regime and cavitation coefficient.

Acknowlegments
The presented work has been supported from the National University Research Council Grant CNCSIS-IDEI nr.35/68/2007 and CNMP 1467/21047/2007

3. Conclusion

Elaborated documentation about studied phenomenon the cavitation phenomenon in the hydraulic distributor spool valve ,allow knowledge from theoretical research and experimental ,and offer the based elements for extend knowledge of phenomenon. To accentuate the existence of cavitation phenomenon inside the acting hydraulic installation ,which works usually with mineral oil ,and especially in case of distributor with spool valve, it was accomplished by experimental way and deduced with numerical way by using calculus software with method of finite element. Correlation of experimental result by Anton I [1], Martin and Wiggert [4, 5] with indicated numerical results by Th. Gaurer [3, 5],Toshiyuki [7], Bernd and Muntean [2, 7]. To determine an analytic numerical relation even approximated it is necessary if we want to describe the initiation and cavitation phenomenon effect in operation of the distributors with spool valve.

Bibliography :

1. Anton, I. (1985), *Cavitatia* , Vol II, Ed. Academiei Romaniei, Bucuresti,
2. Bernad, I. S. (2005), *Hidrodinamica echipamentelor de reglare pentru actionari hidraulice,* Editura Orizonturi Universitare, Timisoara, pp.156, ISBN: 973-638-249-4,
3. Berg, H. (1968) - *Kavitation in erosion korrosion in hidrostatic gertriben*, Olhydraulic und Pneumatik, (22), nr.12, pp.890-896,
4. Gerald,C.F.,Wheatley.P.O.,(1994), *Applied numerical Analysis,* Edition Hardcover, ISBN:13.9780201565539, pp.536,
5. Martin, C.S., Medlarz, S., Wiggert,D.C., Brennen, C. (1981), *Cavitation Inception in Spool Valves,* Journal Fluids Engineering, ASME, Vol 103 (4), pp564-576, ISSN: 0098-2202,
6. Raszga, C., (1998)..*The Cavitation of phenomenal in the distribution of cilynder sertar,* Doctoral Degree Thesis,
7. Toshiuki, H., Cheng, P., Hayashi, S. (1993) *Numerical Analysis of Transient Flow Through a Spool Valve*, Reports. Inst. Fluid Sciences, Tohoku Univ, pp.123-133, ISSN:0916287,
8. D. Opruta - Optimizarea constructiva a comportarii statice si dinamice a aparatelor de comanda a energiei hidraulice, Teza de doctorat, Universitatea Tehnica Cluj- Napoca, 1998.

FOUNDATION OF A ROMANIAN-GERMAN TESTING INSTITUTE FOR ENVIRONMENTAL CONSTRUCTION PRODUCTS IN ROMANIA

INFIINTAREA UNUI INSTITUT ROMANO-GERMAN PENTRU MATERIALE DE CONSTRUCTII ECOLOGICE IN ROMANIA

Patricia Khan, Britta S. Boettcher, Elmar Dorgeloh
Development and Assessment Institute in Waste Water Technology
at RWTH Aachen University (PIA e.V.), Germany

Following Romania's accession to the European Union, numerous areas of the Romanian legislature have been extensively adjusted to the European law. It is especially important to implement new rules and standards in the infrastructure domain, in which a very high level of catching up regarding the completion as well as the necessity of a quality improvement is noticeable. This is why extensive efforts and investments will be necessary to reach the required European standards. For the immaculate function of the techniques and materials required to reach the European standards, they need to be tested according to European criteria and standards. The European Union's directives for construction products 89/106/EWG and machinery 2006/42/EG are to be considered prominently. The goal of these directives is to remove obstructions hindering the joint sale of products, to relieve the entry to the Single European Market for manufacturers as well as to achieve high levels of market transparency. According to the construction products directive, construction products may only be brought into circulation if specific technical specifications are adhered to, which are usually defined within the product-specific, harmonised European Union's standards.

The conformity of a construction product with these technical specifications must be approved of with a certificate of conformity, where the following bodies are involved:

1. Certification authority

The certification authority is a governmental or non-governmental impartial body, which has the necessary competence and responsibility to issue the certification of conformity.

2. Inspection agency

The impartial inspection agency overlooks the effectivity of the in-house quality control and administrates the selection and evaluation of construction products on the construction site or in the factory.

3. Testing institute

The impartial testing institute determines the characteristics and/or the capacity of construction products.

A system for the certification of conformity corresponding to the directive for construction products does not yet exist for wastewater treatment products in Romania. From the Romanian side, the wish was expressed to set up such a system in Romania for environmental construction products, with an emphasis on material testing. Whilst it can be assumed that the requirements for the setup of a certification authority and an inspection agency are satisfied, extensive work remains to be done for the construction of a testing institute.

This includes the establishment of the exact testing areas, the determination of an appropriate location and the planning and building of the testing institute. Within the scope of a Romanian-German cooperation, a testing institute for environmental construction products shall be founded in Romania under the supervision of the joint venture of the Romanian partner IHP and the German partner PIA e.V.. Whilst the main advantage of such a testing institute would be the accelerated realisation of the European building and environmental directives for Romania, Germany can expect two positive effects in the long run. On one hand, it would be ensured that Romanian products would comply with the same quality criteria as in Germany.

Thus the sale and competition of products not adhering to the proper EU-standards in Germany can be averted. On the other hand, the capacity shortage of German testing institutes, resulting also from the testing of East European products, can be compensated by a Romanian testing institute.

In the countries of Central and Eastern Europe, the portion of inhabitants living in rural areas is relatively high.

In Romania, 5 to 6 million people, which makes up ca. 50% of the population, still live in rural areas despite the land-city migrations of the past few years.

In these areas, an access to the public sewerage systems is often disproportionately expensive and connected with technical difficulties. Here, decentralised systems seem to be an appropriate solution. For the most part, they offer the most economical alternative and can achieve cleaning capacities comparable to centralised wastewater treatment plants.

It is assumed that the testing can be financed through testing assignments. Continual extensions of the testing areas are strived for, so as to cover the current demand for testing environmental construction products. In the long run, the construction of a professional testing institute with diverse testing sites for environmental construction products according to European standards is planned, amongst others with a testing field for small wastewater treatment plants for East European products.

The foundation shall be realised in the following steps:

1. Determination of the Testing Areas of the Testing Institute for Environmental Construction Products

To determine these testing areas it is essential to know which legal-political developments are to be expected in Romania's construction and environment sector. In this regard, a perspective plan containing these developments shall be requested from the Romanian ministry for construction. On the basis of this plan, it will be decided which testing areas appear to make sense in the future and with which means they can be realised.

2. Localisation of an Appropriate Site for a Testing Institute for Environmental Construction Products

The bulk of the tests according to the harmonised standards for construction products are conceivably not tied to one location, so that to what extent the IHP already has infrastructure to operate tests and which further measures need to be taken remains to be clarified.

3. Setup and Operation of the Testing Institute for Environmental Construction Products

The foundation of a testing institute for environmental construction products in Romania shall be based on the preliminary examinations. The communication on a political level in Romania is ensured through the cooperation partner IHP. The first testing activities will probably initially concentrate on the testing of watertightness and stability of small wastewater treatment plant tanks according to the harmonised standard EN 12566, which is based on the PIA's experience.

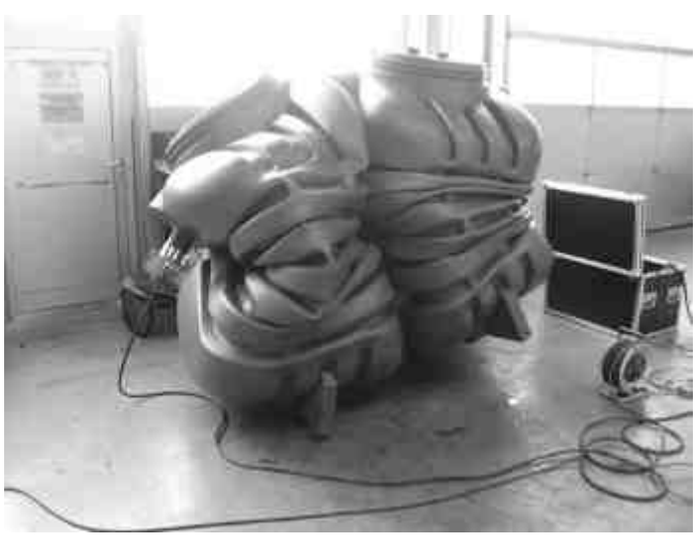

STABILITATEA SISTEMELOR LINIARE
STABILITY OF LINEAR SYSTEMS

Matem. Ing. RĂDULESCU Gabriel*; Drd Ing. RĂDOI Radu*; Ing. MIHAI Niculaie*
*INOE 2000-IHP

Abstract:
This article presents considerations about the technique of linearization of some systems studied in practice, which are generally nonlinear. There can be found a formulation of stability requirements for linear systems, criteria and areas of stability, in the end is presented an application that uses Hurwitz criterion.

1 Considerații generale

- În general sistemele studiate sunt neliniare; posibilitatea liniarizării acestora este legată de mărimea abaterilor parametrilor sistemului față de poziția de echilibru care dacă sunt mici atunci aproximarea liniarității este bună.
- Tehnica liniarizării constă în dezvoltarea în serie a funcțiilor în jurul valorilor corespunzătoare stabilității și neegalizării termenilor de la gradul doi în sus.

2 Formularea condițiilor de stabilitate a sistemelor liniare

Ecuația conservării cantității de mișcare (c.c.m) în mișcare liberă a unui sistem are forma generală

(1.1) $a_0\ddot{x}+a_1\dot{x}+a_2x=F(t)\quad F(t)=0$

în care $a_0\ddot{x}$ exprimă forțele inerțiale, $a_1\dot{x}$ forțele de frecare sau vâscoase, iar a_2x forțele elastice.

Dat fiind că mișcarea este liberă $F(t)=0$

Sistemul de ecuație $a_0x^{(n)}+a_1x^{(n-1)}+\ldots+a_nx=0$ este stabil dacă rădăcinile ecuației caracteristice ale ecuației omogene (1.1) au părți reale negative.

Ecuația caracteristică

$$\left.\begin{array}{l} a_0\lambda^n+a_1\lambda^{n-1}+\ldots+a_n=0 \\ x(t)=c_1e^{\lambda_1 t}+\ldots+c_ne^{\lambda_n t} \end{array}\right\} \quad (1.2)$$

* dacă $\lambda_k>0$ o soluție particulară a lui (1.2) este $A_ke^{\lambda_k t}$

$$\lim_{x\to\infty}x(t)=\ldots+A_k\lim_{x\to\infty}e^{\lambda_k t}+\ldots=+\infty$$

* dacă $\lambda_k<0$ se observă că $\lim_{t\to\infty}x(t)=0$

* dacă $\lambda_k=\alpha+i\beta\Rightarrow\exists\,\overline{\lambda_k}=\alpha-i\beta$

În acest caz soluția particulară corespunzătoare este:

$$\tilde{x}(t)=A_ke^{\lambda_k t}+\beta_ke^{\lambda_k t}=Ae^{\alpha t}\sin(\beta t+\Psi)$$

dacă $\alpha<0$ $\lim_{x\to\infty}\tilde{x}(t)=0$

* Dacă $\lambda=0\Rightarrow a_n=0$ deci ecuația este $a_0x^{(n)}+\ldots+a_{n-1}\dot{x}=0$

Integrând $a_0x^{n+1}+\ldots+a_{n-1}x+C=0$

$\lambda=0\Rightarrow a_{n-1}x+C=0\quad x=-\dfrac{C}{a_{n-1}}$ care este ecuația mișcării staționare (neutrale)

Stabilitate Liapunov

Un sistem liniar este stabil dacă:

- Este stabil dacă rădăcinile ecuației caracteristice au parte reală negativă;

- Este <u>instabil</u> dacă $\exists R_e(\lambda) > 0$;
- Este <u>neutral</u> dacă $\exists \lambda = 0$ (critic).

3 Criterii de stabilitate

3.1 <u>Criteriul Hurwitz</u> (Δ_n) Este condiție de stabilitate legate de caracteristici indiciale sub formă de determinanți. Pentru că rădăcinile ecuației caracteristice să aibă părți reale negative este necesar şi suficient ca determinantul Hurwitz şi minorii pe diagonală să aibă acelaşi semn cu a_0

$$\Delta_n = \begin{vmatrix} a_1 & a_3 & a_5 & 0 & 0 & 0 & - & - & 0 \\ a_0 & a_2 & a_4 & a_6 & 0 & 0 & - & - & 0 \\ 0 & a_1 & a_3 & a_5 & 0 & 0 & - & - & 0 \\ 0 & a_0 & a_2 & a_4 & a_6 & 0 & - & - & 0 \\ 0 & 0 & a_0 & a_2 & a_4 & a_6 & & - & 0 \\ \cdots & \cdots & \cdots & \cdots & \cdots & \cdots & \cdots & \cdots & \cdots \\ \cdots & \cdots & \cdots & \cdots & \cdots & \cdots & \cdots & a_{n-1} & - a_n \end{vmatrix} \qquad \Delta_1 = a_1;$$

$$\Delta_2 = \begin{vmatrix} a_1 & a_3 \\ a_0 & a_2 \end{vmatrix}; \quad \Delta_3 = \begin{vmatrix} a_1 & a_3 & a_5 \\ a_0 & a_2 & a_4 \\ 0 & a_1 & a_3 \end{vmatrix}; \text{ ş.a.m.d}$$

Principalele aplicații sunt în Tabelul 1.1

Tabel 1.1

gr P(λ)	CONDIȚII DE STABILITATE
2	$a_0>0$ $a_1>0$ $a_2>0$ $\Delta_2 = \begin{vmatrix} a_1 & 0 \\ a_0 & a_2 \end{vmatrix} > 0$
3	$a_0, a_1, a_2, a_3>0$ $\Delta_2 = \begin{vmatrix} a_1 & a_0 \\ a_0 & a_2 \end{vmatrix} > 0$ $\Delta_3=a_3\Delta_2$ $\Delta_3>0$
4	$a_0, a_1, a_2, a_3, a_4>0$ $\Delta_3>0$ $\Delta_3 = \begin{vmatrix} a_1 & a_3 & 0 \\ a_0 & a_2 & 0 \\ 0 & a_1 & a_3 \end{vmatrix} > 0$ $\Delta_4=a_4$ $\Delta_3>0$
5	$\Delta_4 = \begin{vmatrix} a_1 & a_3 & 0 & 0 \\ a_0 & a_2 & a_4 & 0 \\ 0 & a_1 & a_3 & 0 \\ 0 & a_0 & a_2 & a_4 \end{vmatrix}$
	$\Delta_5 = \begin{vmatrix} a_1 & a_3 & a_5 & 0 & 0 \\ a_0 & a_2 & a_4 & 0 & 0 \\ 0 & a_1 & a_3 & a_5 & 0 \\ 0 & a_0 & a_2 & a_4 & 0 \\ 0 & 0 & a_1 & a_3 & a_5 \end{vmatrix}$ $a_0, a_1, a_2, a_3, a_4, a_5>0$ $\Delta_2>0$ $\Delta_4>0$

Pentru grad P(λ)>5 calculele sunt dificile.

3.2 <u>Criterii de frecvență ale stabilității</u>

Baza teoretică o constituie studiul diferitelor caracteristici de frecvență în plan cu următoarele avantaje:

- Problema se reduce la studiul unei curbe plane;
- Posibilitatea determinării experimentale a <u>caracteristicilor</u> de

frecvență ale sistemului sau ale unor elemente izolate din sistem;

- Posibilitatea extinderii studiului pe sisteme cu ecuație necunoscută;
- Studiul stabilității sistemului închis se bazează pe aprecierea caracteristicilor sistemului deschis.

A. Criteriul lui Mihailov

Fie ecuația caracteristică $\overline{b}_0\lambda^n + \overline{b}_1\lambda^{n-1} + ...\overline{b}_{n-1}\lambda + \overline{b}_n = 0$

Sistemul este stabil dacă $\lambda_k = x_k + jy_k \quad \forall K \ x_k < 0$ (adică în semiplanul stâng Fig.1)

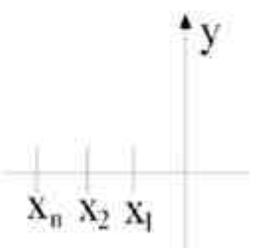

Fig.1

În care rădăcinile sunt:

$$b_0\lambda^n + ... + b_n = b_0(\lambda - \lambda_1)(\lambda - \lambda_2)..(\lambda - \lambda_n)$$

$$\begin{cases} -\lambda_1, -\lambda_2, ... \\ -\alpha_1 + j\beta_1 \ -\alpha_1 + j\beta_1 \end{cases};$$

Ecuația caracteristică devine:

$$b_0(\lambda + \lambda_1)(\lambda + \lambda_2)..(\lambda + \alpha_1 - j\beta_1)(\lambda + \alpha_1 j\beta_1) = 0$$

sau

$$D(\lambda) = b_0(\lambda + \lambda_1)(\lambda + \lambda_2)..\left[(\lambda + \lambda_1)^2 + \beta_1^2\right] = 0 \quad \lambda = j \cdot \omega$$

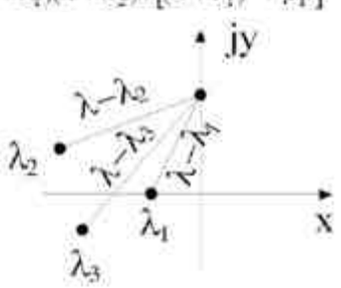

Fig. 2

Când „ω" ia valori de la -∞ la +∞ $\arg(j\omega) = \lambda$ variază de la –π/2 la +π/2, deci parcurge π/2-(-π/2)=π

Atunci $D(j\omega) = b_0\prod_{i=1}^{n}(\lambda - \lambda_i)$ Se scrie succesiv $\sum_{i=1}^{n}\alpha_i = n\pi$

$$\prod_{i=1}^{n}\rho_i(\cos\alpha_i + j\sin\alpha_i) = \prod_{i=1}^{n}\rho_i e^{j\alpha_i} = e^{j\sum_{i=1}^{n}\alpha_i}\prod_{i=1}^{n}\rho_i$$
$$= (\cos n\pi + j\sin n\pi)\prod_{i=1}^{n}(\omega^2 + \omega_i^2)$$

"Hodograful" Mihailov fiind simetric cu axă reală se poate desena numai jumătatea corespunzătoare $0<\omega<\infty$;

"$\forall(\lambda - \lambda_i)$ rotindu-se în sens trigonometric $-\infty<\omega+\infty \Rightarrow \frac{d\theta_i}{d\omega} > 0$

B. Hodografe de sisteme INSTABILE (Fig.4)

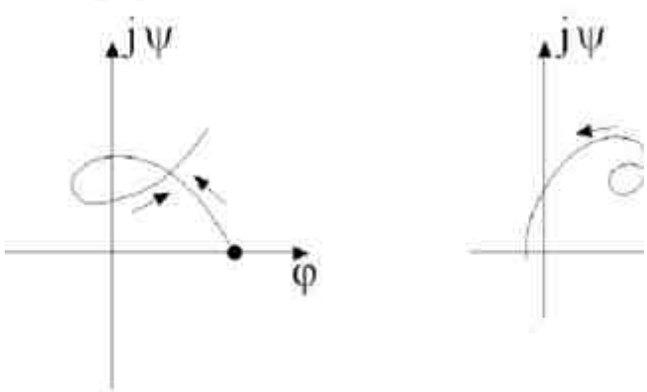

Fig. 4

C. Aplicarea criteriului Mihailov. Criteriul alternanței rădăcinilor

Ecuația caracteristică scrisă succesiv cu $\lambda=j\omega$:

$$D(j\omega) = \varphi(\omega) + j\psi(\omega) = a_n + a_{n-1}\lambda + a_{n-2}\lambda^2 + a_{n-3}\lambda^3 \cdot$$
$$+ j\underbrace{\omega(\overline{b}_{n-1} - \overline{b}_{n-3}\omega^2 + \overline{b}_{n-5}\omega^4 - ...)}_{\psi(\omega)}$$

$$\omega = 0 \begin{cases} \varphi(0) = a_n \\ \psi(0) = 0 \end{cases}$$

Se observă următoarele:

*Intersecțiile cu axa reală corespund ecuatiei $\psi(\omega) = 0$:

*Pentru ca un sistem să fie stabil rădăcina $\varphi(\omega)$ şi $\psi(\omega)$ trebuie să alterneze şi să fie reale;

*Suma rădăcinilor ecuațiilor $\varphi(\omega) = 0$ şi $\psi(\omega) = 0$ este egală cu „*n*"

$n = grad\ \mathrm{D}(\omega)$. Exemple Fig. 5 şi Fig. 6

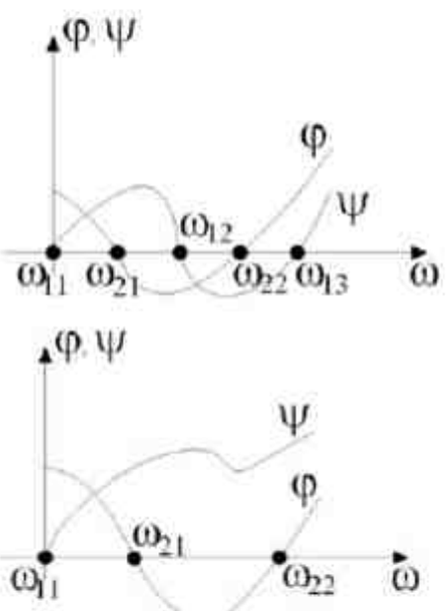

STABIL

INSTABIL

Fig. 5

Fig. 6

Având sistemul cu ecuația caracteristică

$\lambda^5 + \lambda^4 + 4\lambda^3 + 2{,}5\lambda^2 + 3\lambda + 1 = 0$, să se demonstreze stabilitatea aplicând comparativ criteriul Hunwitz şi criteriul Mihailov. Aplicând criteriul Hunwitz se găseşte succesiv:

$$(a_0, a_1, \ldots, a_5):\ \Delta_2 = \begin{vmatrix} 1 & 2{,}5 \\ 1 & 4 \end{vmatrix}$$

$$\Delta_5 = \begin{vmatrix} 1 & 2{,}5 & 1 \\ 1 & 4 & 3 \\ 0 & 1 & 2{,}5 \end{vmatrix}$$

$$\Delta_4 = \begin{vmatrix} 1 & 2{,}5 & 1 \\ 1 & 4 & 3 \\ 0 & 1 & 2{,}5 \\ 0 & 1 & 4 \end{vmatrix}$$

Deci sitemul este stabil

Aplicând criteriul alternanței rădăcinilor ecuației transformate prin $\lambda = j\omega$

$$D(j\omega) = 1 - 2{,}5\omega^2 + \omega^4 + j(3\omega - 2{,}5\omega^2 + \omega^5)$$

cu rădăcinile

$$\varphi = 1{,}25\omega^2 + \omega^4;$$

$$\pm\frac{1}{\sqrt{2}}; \pm\sqrt{2} \Rightarrow +\frac{1}{\sqrt{2}}\ \sqrt{2}$$

$$\psi = 3\omega - 2{,}5\omega^2 + \omega^5;\ 0;\ \pm 1;\ \pm\sqrt{3} \Rightarrow 0\ +1\ \sqrt{3}$$

Nr.ordine	1	2	3	4
ψ	0		1	
φ		$\frac{1}{\sqrt{2}}$		$\sqrt{2}$

$$\Delta_4 = \begin{vmatrix} 1 & 2.5 & 1 \\ 1 & 4 & 3 \\ 0 & 1 & 2.5 \\ 0 & 1 & 4 \end{vmatrix}$$ Deci sitemul este stabil

Aplicând criteriul alternanței rădăcinilor ecuației transformate prin $\lambda = j\omega$

$$D(j\omega) = 1 - 2.5\omega^2 + \omega^4 + j(3\omega - 2.5\omega^2 + \omega^5)$$

cu rădăcinile

$$\varphi = 1.25\omega^2 + \omega^4;$$

$$\pm\frac{1}{\sqrt{2}}; \pm\sqrt{2} \Rightarrow +\frac{1}{\sqrt{2}} \quad \sqrt{2}$$

$$\psi = 3\omega - 2.5\omega^2 + \omega^5;\ 0;\ \pm 1;\ \pm\sqrt{3} \Rightarrow 0 \quad +1 \quad \sqrt{3}$$

Nr.ordine	1	2	3	4
ψ	0		1	
φ		$\frac{1}{\sqrt{2}}$		$\sqrt{2}$

D. Criteriul amplitudine-fază

- Aprecierea stabilității sistemului închis se face pe baza caracteristicii A-F a $W(j\omega)$ a sistemului deschis
- Caracteristica A-F exprimă legătura dintre amplitudinea ieșirii sistemului deschis și amplitudinea acțiunii aplicate care determină defazajul oscilațiilor de ieșire pentru diferite frecvențe.

Fie sistemul deschis $n \geq m$

$$L\left(\sum_{k=1}^{n} a_k x_e^k\right) = D(s) \quad ;$$

Se obține funcția de transfer a circuitului deschis $W = \frac{K(s)}{D(s)}$

Din $x_i = x_e$ se găsește $[D(\lambda) + K(\lambda)]x = 0$ de unde ecuația caracteristică $D(\lambda) + K(\lambda) = 0$ (Fig.7)

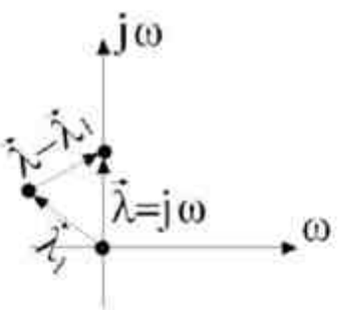

Fig. 7

- Se analizează:

$1 + \omega(s) = \frac{K(s) + D(s)}{D(s)}$ să fie λ_f o rădăcină a ecuației caracteristice

Când „ω" variază de la -∞ +∞, $(\vec{\lambda} - \lambda_1)$ se roteşte cu π în sens trigonometric (dacă λ_f este în semiplanul stâng)

$$1 + \omega(s) = A\frac{(s - s_{11})(s - s_{12})..(s - s_{1n})}{(s - s_{21})(s - s_{22})..(s - s_{2n})}$$ unde

$$\begin{cases} s_{1k} & \text{radacinile } K(s) + D(s) \\ s_{2k} & \text{radacinile } D(s) \end{cases};$$

- Dacă sistemul este închis și stabil s_{1k} sunt în semiplanul stâng;
- Când „ω" variază de la -∞ +∞, $1 + \omega(s)$ are expresia:

$$s - s_{1k} = \rho_{1k} e^{j\sigma_{1k}};$$

$$1 + \omega(s) = A\frac{e^{j(\sigma_{11} + \sigma_{12} + ... + \sigma_{1n})}\prod_k \rho_{1k}}{e^{j(\sigma_{21} + \sigma_{22} + ... + \sigma_{2n})}\prod_k \rho_{2k}} = ce^{j\left[\sum_{k=1}^{n}\sigma_{1k} - \sum_{k=1}^{n}\sigma_{2k}\right]}$$

- Toate rădăcinile s_{fk} fiind situate în semiplanul stâng, unghiul de rotire al $D(j\omega)+K(j\omega)$ este $n\pi$; deci $1+\omega(s)$ se roteşte cu $n\pi - n\pi = 0$

Dacă sistemul deschis este instabil $D(s)=0$ are „*m*" rădăcini în semiplanul drept şi *n-m* în semiplanul stâng; unghiul de rotaţie va fi $n\pi-(n-m)\pi+m\pi=2m\pi$;

- Fie caracteristica *A-F* a sistemului deschis $W(j\omega)$. Originea coordonatelor pentru vectorii $1+W(s)$ (Fig. 8)

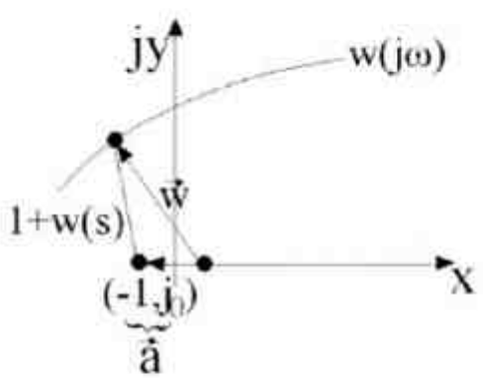

Fig.8

$\vec{W}-\vec{a}=W(s)-(-1)=W(s)+1$, deci originea este $(-1, j_0)$

- Sistemul închis este stabil dacă (Fig. 9)

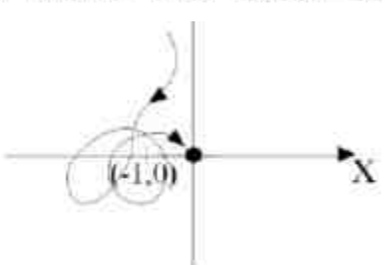

Fig. 9

- ❖ Sistemul deschis este stabil dacă $W(j\omega)$ NU înconjoară $(-1, j_0)$;
- ❖ Sistemul deschis este instabil şi are „*k*" rădăcini în semiplanul drept iar $W(j\omega)$ înconjoară de „*k*" ori $(-1, j_0)$;
- ❖ Trecere pozitivă este trecerea de sus în jos

- Numărul de treceri pozitive peste segmentul *(-∞,-1)* este 1;
- Numărul de treceri negative peste segmentul *(-∞,-1)* este 2;

(Nr treceri pozitive) – (Nr treceri negative) $=\frac{k}{2}\Rightarrow$ sistem stabil, „*k*" nr de rădăcini ale sistemului deschis cu parte reală pozitivă.

3.3 Domenii de stabilitate în planul unui parametru complex

A. Cazul când interesează influenţa unui parametru „*α*" asupra stabilităţii.

Ecuaţia caracteristică a sistemului $D(\lambda)=0$, în care $grad\,\alpha=1$; $D(\lambda)=\alpha R(\lambda)+s(\lambda)$;

$\alpha=-\frac{s(\lambda)}{R(\lambda)}$; $\alpha = x+iy$.

$$A=x+iy=-\frac{s(\lambda)}{R(\lambda)}=P(\omega)+jQ(\omega)\Rightarrow\begin{cases}x=P(\omega)\\ y=Q(\omega)\end{cases}$$

Dând valori lui „ω" se poate desena Hodograful lui „A"

Fie ecuația

$\lambda^3+\lambda^2+\lambda+A=0;\ A=-\lambda^3-\lambda^2-\lambda;\ \lambda=j\omega$

,

Se aplică criteriul alternanței rădăcinilor:

$$D(j\omega)=A-\omega^2+j\omega(1-\omega^2);$$

$$\varphi(\omega)=A-\omega^2\quad \omega=\pm\sqrt{A};$$

$$\psi(\omega)=\omega(1-\omega^2)\ \omega=0\ \ \omega=\pm1;$$

Rezultă $A\in[0,1]$

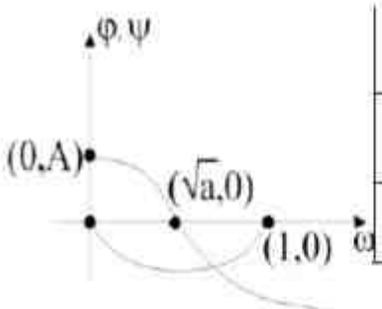

ord	1	2	3
φ		$\sqrt{A}$	
ψ	0		1

Fig. 10

B. <u>Cazul influenței a doi parameti</u> α,β asupra stabilității care intră liniar în ecuația caracteristică:

$$\alpha P(\lambda)+\beta Q(\lambda)+S(\lambda)=0$$

$$\lambda=j\omega\ \begin{cases}P(\lambda)=P_1(\lambda)+jP_2(\lambda)\\ Q(\lambda)=Q_1(\lambda)+jQ_2(\lambda)\\ S(\lambda)=S_1(\lambda)+jS_2(\lambda)\end{cases}\alpha(P_1+jP_2)+\beta(Q_1+jQ$$

; Sau:

$$\begin{cases}\alpha P_1+\beta Q_1+S_1=0\\ \alpha P_2+\beta Q_2+S_2=0\end{cases}\quad \alpha=\frac{\begin{vmatrix}-S_1 & Q_1\\ -S_2 & Q_2\end{vmatrix}}{\begin{vmatrix}P_1 & Q_1\\ P_2 & Q_2\end{vmatrix}};\ \beta=\frac{\begin{vmatrix}P_1 & -S_1\\ P_2 & -S_2\end{vmatrix}}{\begin{vmatrix}P_1 & Q_1\\ P_2 & Q_2\end{vmatrix}};\ \Delta=$$

1. $\Delta=0$ $\Delta_1\ \Delta_2\neq0$; Δ trece prin zero la un punct infinit depărtat de frontiera domeniului;

2. $\Delta=0$ $\Delta_1=\Delta_2=0$; α,β au o infinitate de valori în semiplanul drept în care ω_0 este o valoare în care determinanta se anulează.

$$\alpha=-\frac{S_1(\omega_0)}{P_1(\omega_0)}-\frac{Q_1(\omega_0)}{P_1(\omega_0)}\beta$$

Fie ecuația caracteristică

$a_0\lambda^3+a_1\lambda^2+a_2\lambda+a_3=0$ Se notează

$$\frac{a_1}{a_0}=\overline{b_1};\ \frac{a_2}{a_0}=\overline{b_2};\ \frac{a_3}{a_0}=\overline{b_3}$$

Se alege

$$k^3\lambda_1\lambda_2\lambda_3=1;\ k^3=\frac{1}{b_3};\ k=\frac{1}{\sqrt[3]{b_3}}=\sqrt[3]{\frac{a_0}{a_3}};\ k^2=\sqrt[3]{\frac{a_0^2}{a_3^2}}$$

Ecuația transformată:

$\lambda^3+A\lambda^2+B\lambda+1=0$ în care

$$A=\frac{a_1}{a_0}\sqrt[3]{\frac{a_0}{a_3}};\ B=\frac{a_2}{a_0}\sqrt[3]{\frac{a_0^2}{a_3^2}};$$

Aplicație

Fie ecuația caracteristică

$\lambda^3+A\lambda^2+B\lambda+1=0\ \ \lambda=j\omega$

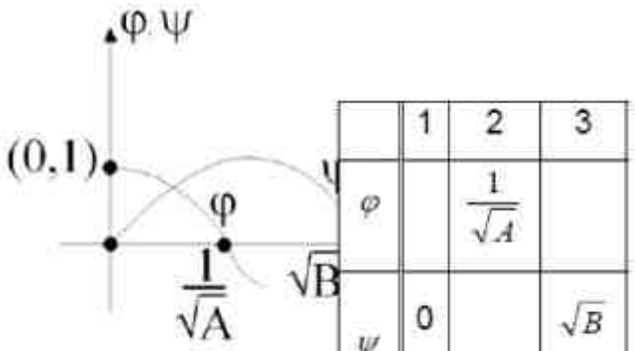

	1	2	3
φ		$\frac{1}{\sqrt{A}}$	
ψ	0		$\sqrt{B}$

Fig. 11

Bibliografie:

1. Mihai Emilian Popescu - “Stabilitatea si stabilizarea sistemelor dinamice”, Ed. Tehnicã, 2009;
2. Marin V., Marin Al. - “Sisteme hidraulice automate”, Ed. Tehnicã, 1988;
3. Vasiliu N., Drumea P., Vasiliu D., Marin Al. - "Cercetãri teoretice ºi experimentale asupra dinamicii amplificatoarelor electrohidraulice proporþionale", Conferinþa Naþionalã de Energeticã, Bucureºti, 1988;
4. Mircea Comes, Andrei Drumea, Adrian Mirea, Gabriela Matache - „Intelligent servohydraulic device for the control of the motion”, ISSE 2001 , Cãlimãneºti –Cãciulata , România.
5. Rãdulescu, G.,Drumea, P., Marin, Al., Matache, G., – Calculul timpului de rãspuns al sistemului hidraulic al regulatorului de turbinã – Tehnologii moderne, calitate, restructurare, Conferinþa Internaþionalã de Comunicãri ªtiinþifice TMCR 2001, Chiºinãu
6. Studiul privind tipurile componentelor mecatronice– realizat de INOE 2000 - IHP in cadrul lucrarii - Cercetãri avansate în domeniul componentelor mecatronice de execuþie în scopul ridicãrii performanþelor ºi diversificãrii sistemelor utilizabile în acþionarea electrohidraulicã.

CRIȚICAL ASPECȚS OF ȚHE NEW PARADIGM OF ȚOȚAL INNOVAȚION MANAGEMENȚ – ON A PROCEDURE FOR ȚHE EVALUAȚION OF ȚHE INNOVAȚIVE POȚENȚIAL

ASPECȚELE CRIȚICE ALE NOII PARADIGME A MANAGEMENȚULUI ȚOȚAL AL INOVARII - PRIVIND PROCEDURA DE EVALUARE A POȚENȚIALULUI DE INOVARE

Alexandru Marin, alma@almaeng.ro - ALMA ENGINEERING Ltd., Bucharest, Romania
Dan C. Badea, dancbadea@clicknet.ro - CCMMM, Bucharest, Romania
Ioan Plotog, ioan.plotog@cetti.ro - University POLITEHNICA of Bucharest, Romania

Abstract

The present paper makes a critical analyze of the concept of Total Innovation Management – TIM, with respect to the novelty of this approach, to its domain of validity and to the present degree of its implementation in the real economic systems. Consequently, the authors proposed an original and simple mathematical model for assessing the innovative potential and offered certain practical correlations between human resources utilization "efficiency" and the number of patent application, considered as the output of the innovative production. We have also analyzed some specific data for the Romanian country profile, with the purpose of highlighting the relative strengths and weaknesses in innovation performance and its main drivers of innovation growth.

Introduction

The concept of Total Innovation Management – TIM is desired to be a very modern and comprehensive one (Xu, 2007 and Li, 2008). The scientific approach is alike in "mechanics" problems, when the position of a material particle is identified in a Cartesian reference system O-xyz by its spatial coordinates. So, a first axis regards the innovation in all human activities, technological and non-technological ones, at the level of strategies, culture, organization, market etc. The second axis take into account the innovation process at the level of all persons implicated in the specific processes of enhancing firms competences. Third axis considers innovation in every time period of activity and at all organization levels of a company. In this moment, it is important to mention that this approach is relative non-scientific and not so rigorous, because the variables are empirical and dimensional non-homogeneous ones.

Briefly speaking, the three above mentioned axis are: activities, people, time-space, all of these being, in fact, the human and material resources and the way to organize them for running successfully an economic activity.

TIM is defined as the reinvention and management of an innovation value network that dynamically integrates the conception, strategy, technology (including IT base), structure and business process, culture, and people at all levels of an organization. TIM aims to enhance the innovation competence of the company, create value for stakeholders, and sustain competitive advantage (Xu, 2007).

Without denying the value of this new concept of TIM, mainly drawing on innovation theory, as well as on two distinct areas of recent research: core competence theory and complexity theory, there are several difficult to implement theoretical and policy implications. As declared in intentions, TIM seems to be a "journey", not a "destination", towards enhanced firm competence, a rather long-term, competence-based management philosophy for achieving sustainable competitive advantage involving all people at every aspect and level of organization at all time and across all space.

The associated ideas of synergy and holistic approach, well fitted for explaining the sudden transitions and the discontinuities in the nowadays economical processes, determined us to settle some rationale evaluations of the major components of the TIM framework.

Focusing on our geographical area and because Romania became a member of European Union since January 2007, we think is useful to present some factors, that strongly influence innovation performance.

The European Innovation Scoreboard (EIS) has been published annually since 2001 to track and benchmark the relative innovation performance of EU Member States. For the EIS 2008 (*EIS*, 2008), the methodology has been revised and the number of dimensions was increased to 7 and it were grouped into 3 main blocks covering enablers, firm activities and outputs (see FIG. 1).

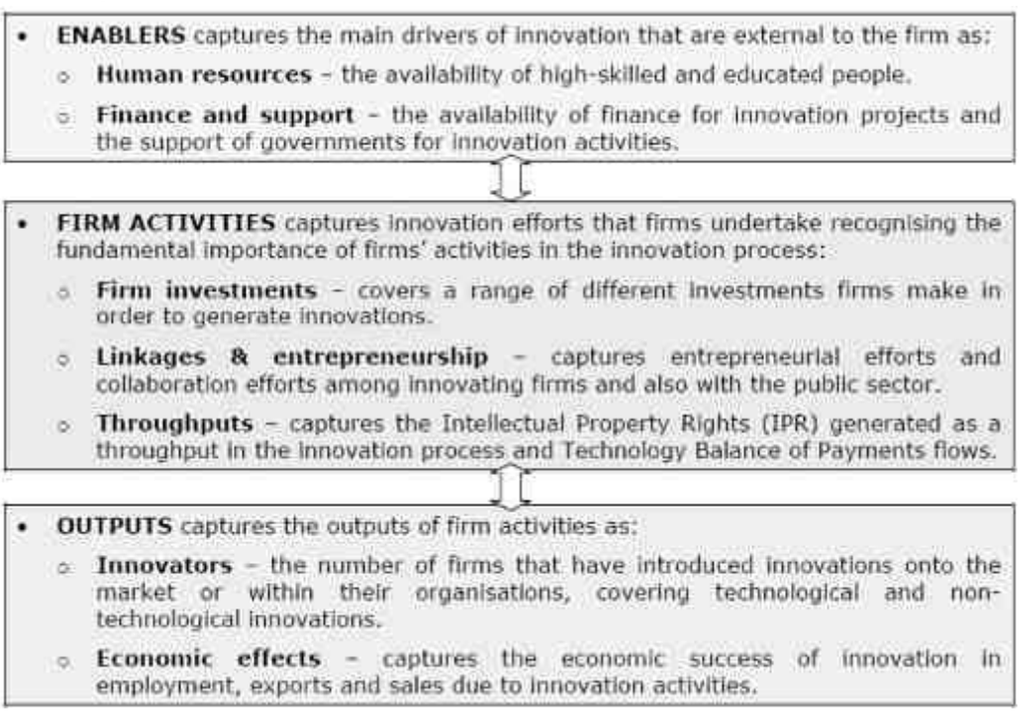

Fig. 1: Dimensions of innovation performance captured in the eis

It is considered that the above described dimensions form the core of national innovation performance. In addition, there are wider socio-economic factors that influence innovation, such as the role of governments, markets, social factors and the demand and acceptance of innovation. These factors and their relationship with innovation performance have been explored in various EIS thematic papers (*EIS*, 2008).

Patents are an intellectual property right issued by authorized bodies to inventors to make use of and exploit their inventions for a limited period of time (generally 20 years). Patents are granted to firms, individuals or other entities as long as the invention is novel, non-obvious and industrially applicable.

The patent holder has the legal authority to exclude others from commercially exploiting the invention (for a limited time period). In return for the ownership rights, the applicant must disclose information relating to the invention for which protection is sought. The disclosure of the information is thus an important aspect of the patenting system. A patent is a policy instrument intended to encourage the making of inventions and the subsequent innovative work that will put those inventions to practical use; it is also expected to procure information about the invention for the rest of the industry and the public generally.

By providing a legal framework for protecting inventions, the patent system has an important influence on economic performance by stimulating innovation that increases productivity. Patents are a key measure of innovation output, as patent indicators reflect the inventive performance of countries, regions, technologies, firms, etc. They are also used to track the level of diffusion of knowledge across technology areas, countries, sectors, firms, etc., and the level of internationalization of innovative activities. Patent indicators can serve to measure the output of R&D, its productivity, structure and the development of a specific technology / industry (Pinheiro-Machado, 2004). Among the few available indicators of technology output, patent indicators are probably the most frequently used. The relation-ship between patents as an intermediate output resulting from R&D inputs has been investigated extensively. Patents are frequently viewed as an output indicator; however, they could also be viewed as an input indicator, as patents are used as a source of information by subsequent inventors (Varsakelis, 2001 and 2006).

The relation between economic growth and R&D development is constantly investigated. Substantial progress has been made in the calculation and assessment of the economic growth parameters (Sharma, 2008).

However, problems concerning the calculation or R&D development parameters are still difficult to solve, particularly regarding the conception and selection of appropriate parameters.

One of the indicators is the innovative production. Specialists have suggested different equations for calculation of this indicator (Maclean, 1993 and Teitel, 1994). In this paper, we propose another equation for a similar purpose, with a numerical application using Romanian data, from the national R&D system.

Conceptual frame and critical aspects of the new paradigm of Total Innovation Management

TIM is an emerging paradigm that incorporates important contributions from earlier research while emphasizing the importance of ecosystem thinking (Xu, 2007). In FIG. 2 we depict the TIM model. From an ecosystem perspective, TIM not only emphasizes the synergistic linkage among all inherent elements, but also emphasizes that all employees are innovators and that innovation is realized in the totality of time/space of an enterprise and beyond.

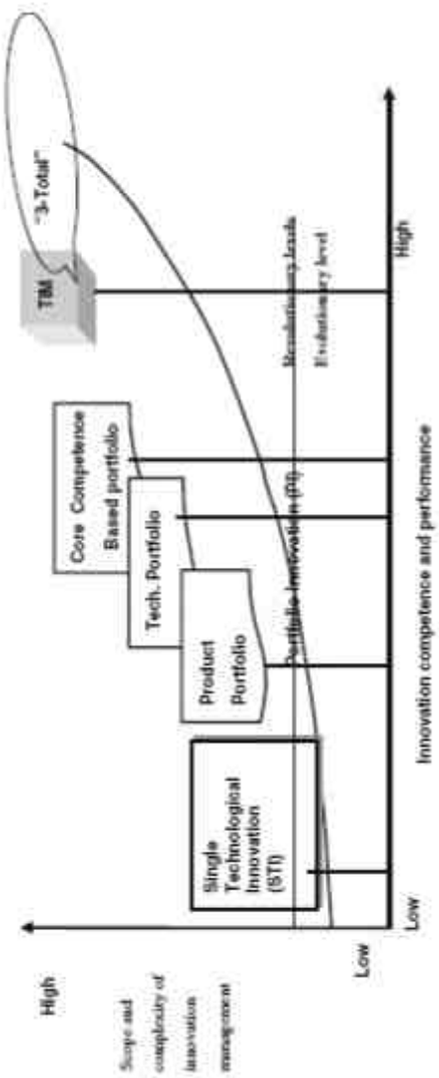

Fig. 2: The three levels of Innovation management

So, in FIG. 2, the arrangement of the concepts is interesting, but seems rather “far-fetched” and without original interpretations, i.e.: why this process develops so and not in another manner, which are the premises for the appearance of certain sudden transitions etc. Without being as “the fox with the grapes”, we consider this type of approach as “a socialist competition”, where the activities, in our case the innovative ones, are “freely consented by all workers and according to a superior labor conscience, specific for a new employed man type …”. This concept is probably valid only in the Chinese economical and political system.

TIM may be defined as an ecological system (see FIG. 3) directed by strategy innovation. Its function is to accumulate and enhance core competency to win sustainable competitive advantage. This approach brings other “miracle” concepts, as: synergy, eco-systems, “every worker is innovative …”, innovation process is continuous in time and space, inside and in the “activity perimeter” of every company. Again, every thing is “acting global, fully integrated and broadly comprehensive”, this fact being possible in a large scale economy, but at the level of SME-s it's validity is doubtful.

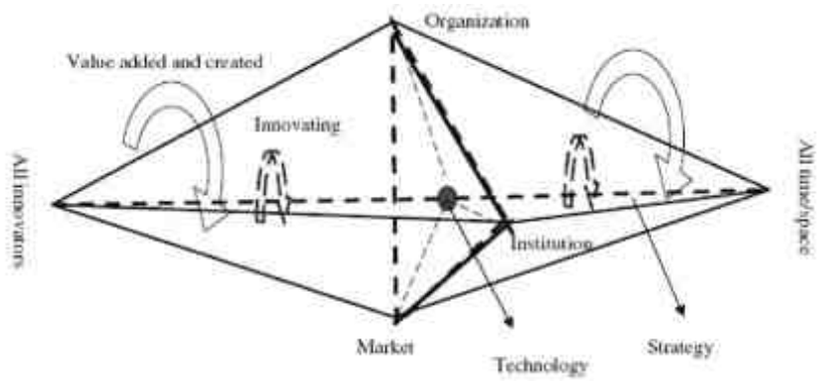

Fig. 3: The framework of tim

TIM relates to innovation in all organizational sectors, all employees and covers all time and space dimensions. Each element plays a key role in the practice of TIM and is an integral part of the TIM framework (see FIG. 4). The all-elements innovation, as FIG. 5 shows, can be described as creating synergy between the technological (mainly product, process, and portfolio) and non-technological (mainly market, organization, and institution) areas in an organization through effective tools and facilitating mechanisms that encourage and regulate innovation by every employee.

Here, we observe an interesting combination between the notions of institution, organization, market, technology, innovative persons / mechanisms / instruments, all grouped in “intuitive” and very general schematics, where, if we change the subject of the analyze from the innovation process to the environmental protection, with the consequent adaptations, the presented systematizations are perfectly valid.

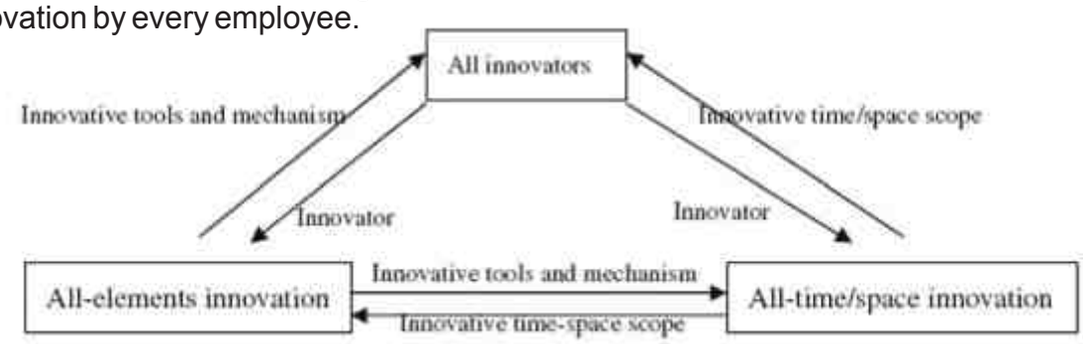

Fig. 4:Constituents of the framework of tim

Fig. 5: All-elements innovation of tim

To describe in detail, the "4-W" (when, where, what, whole) model is used for analysis of the all-time/space aspect of TIM (see FIG. 6). The differences between the analyzes done in FIG. 5 and 6 correspond to the variables: the replacement of “elements” with “time/space” and the spatial disposal: “pyramid” becomes a “sphere”.

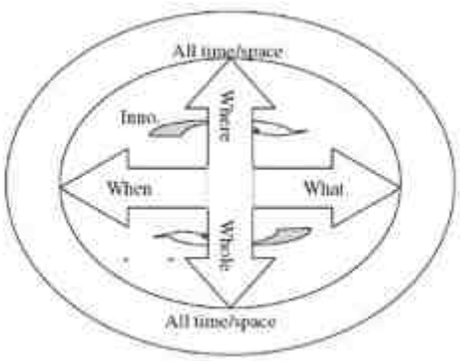

Fig. 6: All-time/space innovation of tim

The linkage of TIM to strategy innovation is illustrated in Fig. 7. Due to the increasingly turbulent and uncertain environment that enterprises face, strategy should remain relatively stable but avoid rigidity. As the internal and external environments change, the enterprise's strategy should be adjusted in a timely manner and kept in a dynamic balance. Through TIM implementation, dynamic competences, including organizational skills, technologic competence, environment adaptation, and all employees' knowledge and skills, will be improved and better feedback will promote strategy innovation.

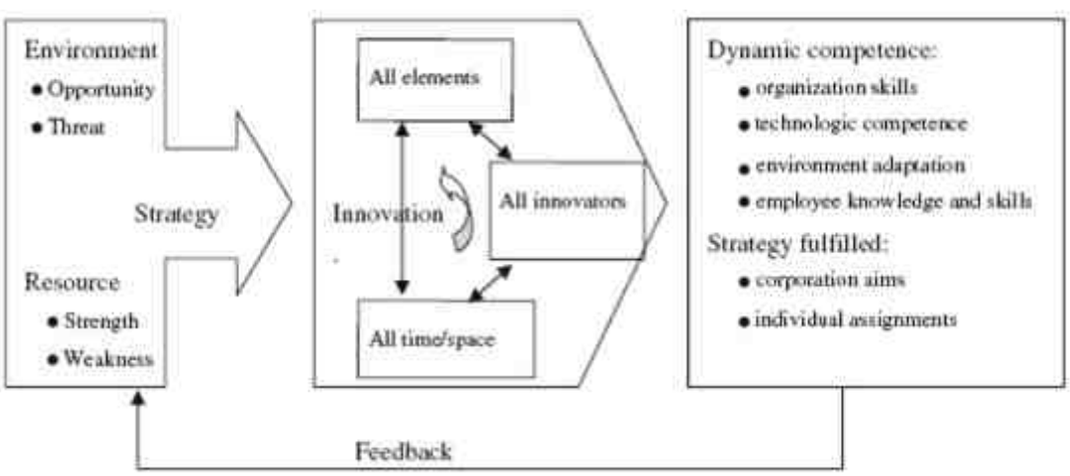

Fig. 7: The linkage of tim to strategy innovation

The only element, comprised in the scheme from FIG. 7, valid from the point of view of automation theory is the presence of “feedback”, destined to correct the associated process errors. Again, the formulations are excessively general, without any practical “elements”. It could be very interesting to assess how many SME's would be capable to implement such a complex functional organization. Maybe besides these evaluations there are serious, well established case studies - grounded on realistic economical data bases, but the way of presenting these diagrams doesn't prove at all a pragmatic approach to the issue.

In order to establish how necessary is the TIM approach, for what companies (SME's or large ones) is applicable and which are the means and methods to maximize the innovation potential of our national R&D system, we propose to make a quantitative and qualitative analyze of the innovative production in our country. In this first stage, we use a very simple approach, grounded on an original simple calculus formula and considering that only patent indicators are sufficient for characterizing the innovative potential.

Procedure and computing methodology for the evaluation of the Innovative Potential

Like any other indicators, patent indicators are associated with some advantages and disadvantages. The advantages of patent indicators are: a) patents have a close link to inventions; b) patents cover a broad range of technologies on which there are sometimes few other sources of data; c) the contents of patent documents are a rich source of information (on the applicant, inventor, technology category, claims etc.); and d) patent data are quite readily available from patent offices.

However, patents are subject to certain drawbacks: a) the value distribution of patents is skewed as many patents have no industrial application (and hence represent no value for the society) whereas a few of them are of substantial value;

b) many inventions are not patented because they do not fulfill the conditions or inventors may protect the inventions using other methods, such as secrecy, lead time, etc.; c) propensity to patent differs across countries and industries; d) differences in patent regulations make it difficult to compare them across countries; and e) changes in patent law over the years make it difficult to analyze trends over time.

Nevertheless, in the absence of a “perfect” innovation output indicator, patent indicators are the best available indicators of innovation output.

For the calculation of every country's innovative production, S. Teitel (Teitel, 1994) uses the following variables:

N – Number of innovations per resident of a country;

S – Human resources (every country's total number of researcher);

E – R&D expenses;

Y – National income per capita;

P – Number of inhabitants.

Also, S. Teitel considers that the innovative production depends on human resources and the research expenses, following the next relation:

$$N = N(S, E) \quad (1)$$

More explicitly, the equation may be written as below:

$$N = N_0 S^a E^b \quad (2)$$

where: a ?0 ; b ?0 (positive constants) and N_0 represents the initial number of innovations per resident of a country. The above relation draws attention on the human factor, which can affect the innovative production.

Similar, in his study, C.J.J. Maclean (Maclean, 1993) presents a linear correlation between the annual budget (X) and the annual number of publications (p):

$$p = uX \quad (3)$$

where: u ?0 is a positive constant.

This equation points out the influence of financing upon the scientific (innovative) production.

The authors of the present paper propose a model based on the human factor and the specific financing of the innovation process.

The specific financing (f /c) is the ratio between funds earmarked for R & D (f) and the total number of researchers (c).

If we denote:

f /c = ö , (4)

then we can write the relation:

N = bö (5)

where: N is the number of patent applications, f is the financing, in € and c is the number of researchers.

The specific financing, ö , is a complex factor, as, on one hand, it depends on the policy decision – making and, on the other hand, it is influenced by the responsiveness of the human factor active in R&D system. By means of the coefficient "b", the specific financing determines the innovative production.

Using Romanian data (*Annual Report – OSIM* and *Romanian Annual Statistics,* 2007), we indicate the correlation between the number of patent applications (N) and the specific financing (f /c), as it is shown in FIG. 8.

Fig. 8: Correlation between the number of papent applications and the specific financing

With the aid of FIG. 8, we can evaluate the value of coefficient "b", by approximating through linear interpolation the variation of the parameter N with the ratio f /c, the corresponding interrupted straight line having a negative slope, calculated with the following relation:

b = tgá = (N0 –N) / (ö – ö0) = ÄN / Äö (6)

If we make the dimensional analysis of the equation (6), we obtain:

[b] = [ÄN] / [Äö] = Number of inventions / Currency / Number of researchers m (7)

or:

[b] = (Number of inventions / Currency) x Number of researchers (8)

and consequently, the dimension equation can be written as follows:

[b] = {[N] / [f]}x [c], (9)

corresponding to another form of the relation (6):

b = (N / f) x c (10)

An interesting idea is to reformulate previous equation:

b = (N / c) x (c^2 / f) (11)

where, we can introduce another significant variable:

N / c = ð , (12)

ð being the innovative performance of the researchers.

Equation (11) combined with equation (12) becomes:

$$b = ð c^2 / f \quad (13)$$

From equations (13) and (5), we obtain:

$$N = (ð c^2 / f) ö \quad (14)$$

Finally, equation (14) can be written as:

$$N = (ð ö / f) c^2 \quad (15)$$

If we are noting:

$$ð ö / f = m \quad (16)$$

then:

$$N = m c^2 \quad (17)$$

The factor "m", from the equation (17), has the significance of a human resources utilization "efficiency".

This factor can be expressed also like below:

$$m = (ð / f) x (f / c) \quad (18)$$

The innovative productivity of researchers (ð) is a qualitative effect, which represents the specific production of inventions done by a scientific researcher, i.e. his / her creative work intensity.

The number of employed researchers (c) is the result of the effort made by society as a whole and depends on financing capabilities of the society to sustain research activities.

It is known that productivity means the ratio between the effects and the effort made in a particular work.

The principle goal of the R&D activity is to generate, as an effect, a certain level of innovative productivity, while society makes efforts to sustain this effort, by means of taxes - public funding. Thus, it seems logical to consider that the factor "m" of the equation $N = mc^2$ represents the human resources utilization "efficiency", associated to R&D activity.

In FIG. 9, we follow a time evolution in Romania of the annual values for the parameters "m", number of patent application "N" and number of researchers "c".

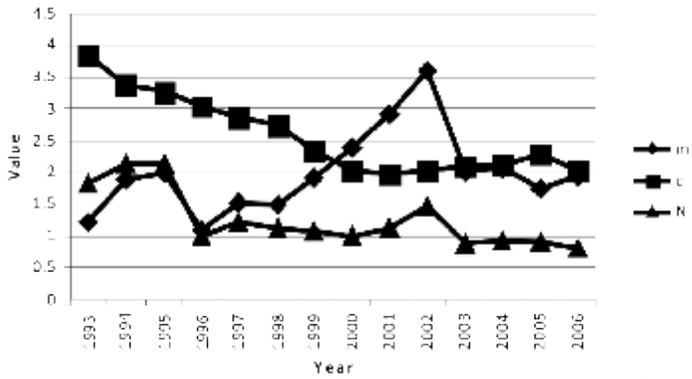

m = current value x 10^{-6}; c = current value x 10^4; N = current value x 10^3

Fig. 9: Time evolution in romania of annual values for parameters "m", "n" and "c"

From 1993, till 2006 we observe a continuous decrease of the number of researchers "c", process associated to the difficult period of transition, with a favorable tendency of stabilization after year 2000. The number of patent application "N" varied differently, stabilizing and having a positive tendency after 1996 till 2002, followed by another decrease and stable period, with very small diminishing tendency up to 2006, strongly influenced by the specific legislation for financing the innovation, with provisions more or less favorable in different time periods.

The Romanian factor "m" was 3,62 x 10^{-6}, in the year 2001 and in 2006 the corresponding value became 2,44 x 10^{-6}. In the same period, the financing per researcher capita decreased from 46.315 € / capita to 28.945 € / capita [4] and the same tendency was observed for the number of researchers "c". These evolutions are perfectly correlated, a comparison between the variations of parameters "m" and "N" showing highly similar evolutions. This fact proves the high "sensitivity" of the human resources utilization "efficiency" - "m" and sustains our option for using this parameter for analyzing the innovation potential, in direct connection with the outputs of this process, respectively in our study: the number of patent application "N".

Romania is one of the growth leaders among the Catching-up countries, with an innovation performance well below the EU27 average but a rate of improvement that is one of the highest of all countries (*EIS*, 2008).

Relative strengths, compared to the country's average performance, are in Innovators and Economic effects and relative weaknesses are in Finance and support and Throughputs. Over the past 5 years, Finance and support and Throughputs have been the main drivers of the improvement in innovation performance, in particular as a result from strong growth in Public R&D expenditures (18%), Private credit (17,4%), Broadband access by firms (24,3%), Community trademarks (36%) and Community designs (44,3%). Performance in Firm investments and Innovators has increased at a lower pace.

The Romanian country profile is highlighting the relative strengths and weaknesses in innovation performance and its main drivers of innovation growth. The detailed data tables are available from the INNO Metrics website (http://www.proinno-europe.eu/metrics) and detailed information on policy measures and governance is available at the INNO Policy Trend Chart website (http://www.proinno-europe.eu/trendchart), some relevant key figures being given in FIG. 10, for the year 2008 (*EIS*, 2008).

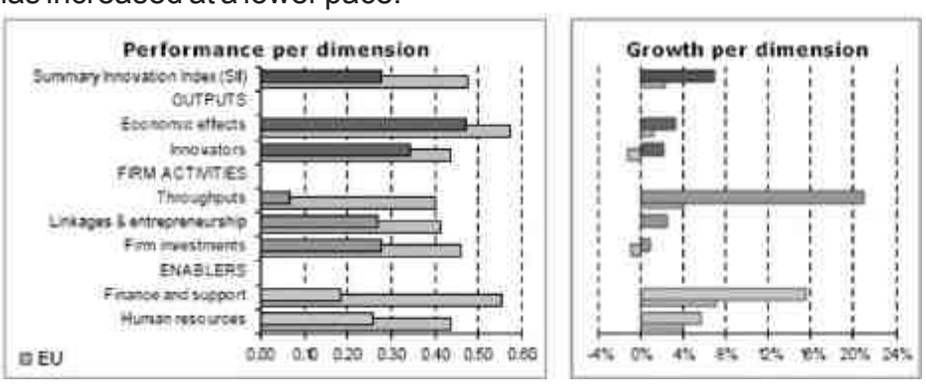

Fig. 10: Relevant innovation key figures in romania, for the year 2008

Conclusions

The paradigm of TIM stresses the synergies between the technological and non-technological elements of innovation. Furthermore, it proposes an extension to the portfolio innovation management view and offers a more dynamic, and integrative, theoretical framework for the field of innovation management. It takes the time and space dimension of innovation management into account and also holds the view that all people are innovators. The paradigm of TIM provides a basis for an upgraded, more unified, and better-attuned view of the core issues of the innovation management field.

For this moment, in our opinion TIM is more a “wishful thinking”, than a reality, especially for SME's. The TIM approach is more adequate for large companies, but the new global economy system and the context of the present crisis offers new opportunities for taking certain valuable elements and implementing them in all modern management systems, altogether with important changes in the mentality of the people implicated in innovative processes.

Analyzing statistical data for SME's and for large companies, we proposed to obtain an original simple mathematical model for assessing their innovation capacity, in the first stage by using only one commonly accepted criteria: the number of patents. Consequently, we formulated certain practical correlations between human resources utilization “efficiency” and the number of patent application, considered as the output of innovative production.

Relative to S. Teitel's and Maclean's equations, the method proposed by the authors of the present paper to evaluate the innovative potential is more “sensitive”. Our goal was to identify certain correlations between the innovative potential of a country, with a case study for Romania, and the number of researchers, which proves the necessity and usefulness of a strategic policy in R&D human resources.

Finally, the new proposed equation may be also useful for comparative analyses, concerning the evolution of the innovative output of different countries, in the context of various national policies.

In out future work we intend to create a more complex mathematical model characterizing the innovative processes and their performance, by taking into account more parameters, as presented in FIG. 10 and running a "sensitivity analyze" for some case studies in Romania and abroad.

References

[1] Li, Z.W. (2008). The impact of government efforts, economy openness & informationalization on R&D investment: An empirical investigation in China, PROCEEDINGS OF THE NINTH WEST LAKE INTERNATIONAL CONFERENCE ON SMALL AND MEDIUM BUSINESS (WLICSMB), 686-689.

[2] Maclean, J.J.C. (1993). The publication productivity of international agricultural research centers, *Scientometrics*, Vol. 28, Issue 3, 329-348.

[3] Pinheiro-Machado R., Oliveira, P.L. (2004). A comparative study of patenting activity in US and Brazilian scientific institutions, *Scientometrics*, Vol. 61, Issue 3, 323-338.

[4] Sharma, S., Thomas V.J. (2008, September). Inter-country R&D efficiency analysis: An application of data envelopment analysis, *Scientometrics*, Vol. 76, Issue 3, 483-501.

[5] Teitel, S. (1994, January). PATENTS, RESEARCH-AND-DEVELOPMENT EXPENDITURES, COUNTRY SIZE, AND PER-CAPITA INCOME - AN INTERNATIONAL COMPARISON, *Scientometrics*, Vol. 29, Issue 1, 137-159.

[6] Varsakelis, N.C. (2006, September). Education, political institutions and innovative activity: A cross-country empirical investigation, *RESEARCH POLICY*, Vol. 35, Issue 7, 1083-1090.

[7] Varsakelis, N.C. (2001, August). The impact of patent protection, economy openness and national culture on R&D investment: a cross-country empirical investigation, *RESEARCH POLICY*, Vol. 30, Issue 7, 1059-1068.

[8] Xu, Q.R., Chen, J, Xie, Z.S., Liu, J., Zheng, G., Wang, Y. (2007). Total Innovation Management: a novel paradigm of innovation management in the 21st century, *JOURNAL OF TECHNOLOGY TRANSFER*, Vol. 32, Issue 1-2, 9-25.

[9] Maastricht Economic and social Research and training centre on Innovation and Technology (2009, January). *EUROPEAN INNOVATION SCOREBOARD 2008*, http://www.proinno-europe.eu/metrics.

[10] x x x (2007). *Annual Report - OSIM*, Bucharest, Romania.

[11] x x x (2007). *Romanian Annual Statistics*, Bucharest, Romania.

IMPROVING THE RELIABILITY OF A GUIDE VANE ACTUATING MECHANISM FOR BULB - TYPE UNITS

IMBUNATATIREA SIGURANTEI UNUI MECANISM DE ACTIONARE CU VANA DE GHIDARE PENTRU UNITATI DE TIP BULB

Mircea BÃRGLÃZAN[1], Ilare BORDEAª U[1], Mircea POPOVICIU[1], Victor BÃLÃª OIU[1], Lucian MÃDÃRAS[1], Cãtãlin STROIÞÃ[2]

[1]*Universitatea "Politehnica" Timişoara*

Abstract: *The analysis has as a purpose to notice the elements that can produce incidents during the running of the regulating apparatus of bulb turbines. The analyzed regulating device has a robust construction. Although, a critical element is the connecting rod which can produce two types of incidents: a) the detachment from the joining bolt of the regulating ring and b) the uncontrolled modification of the length during the running. The kinematical analysis of the guide vane regulating apparatus shows that the connecting rod fulfills a three-dimensional movement of great amplitude. If the Grower washers suffer cracks the three screws, which connects the metallic sphere with the bolt of the regulating ring, are unscrewed. This fault can lead, in certain cases, to important damages of the regulating apparatus parts. There were made recommendations regarding the reliability increase of the system.*

Key words: bulb-type units, conical guide vane regulating apparatus, reliability, kinematical analysis.

1. Introduction

In comparison with the ordinary axial machines the bulb-type units creates some difficulties of design and running. As a result of some operation observations it was made a demand to analyze the guide vane regulating apparatus with the purpose to notice the elements that can produce exploitation problems.

During this analysis it resulted that a critical element is the connecting rod, which can produce the following incidents: a) the detachment from the joining bolt of the regulating ring and b) the uncontrolled modification of the length during the running.

There have been made recommendations regarding the necessary interventions upon the connecting rod in order to increase the running safety.

2. The Analyzed Guide Vane Regulating Apparatus

For bulb-type units the guide vane-regulating device has a conical shape.

This apparatus consists from the following important elements:the guide vane servomotors with the afferent rods, the regulating ring with the joining bolts, the connecting rods, the cranks and the guide vanes.

In Figure 1 is presented a longitudinal cross section through the guide vane apparatus in which it can be seen: the guide vane, the crank, the joint crank- connecting rod, a small part of the regulating ring with the inclined vane in which is fastened the connecting rod joint bolt.

In Figure 2 it is presented the view of a regulating apparatus segment, seen from inside the bulb. One guide vane is presented in both the extreme positions: completely closed and completely open. The regulating device is actuated with two servomotors placed inside and at the lower part of the bulb. On the regulating ring are welded 16 vanes inclined at 60º (Figure 1). The joining bolts are mounted on these vanes.

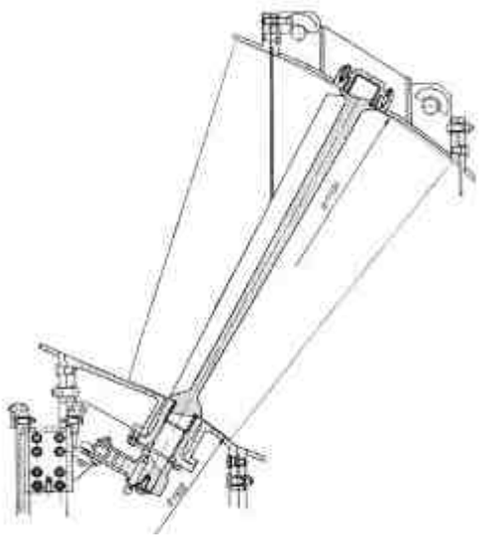

Fig. 1. Longitudinal cross section through the guide vane apparatus

The connecting-rod presented in Figure 3, is a complex detail having the following main parts: the left thread link ring (1), the right thread link ring (2), the lids (8, 9), the antifriction spherical bushings (10) and the joint bolt (11). Besides the transmission of the maneuvering force, the connecting rod fulfills two other important functions.

The first is represented by the spatial movement of the connecting rod, realized through the sliding of the bushings (10) over the metallic spheres (6, 7). These sliding allow the necessary spatial movement of the connecting rod in order to maintain the center of the sphere (6) in the movement plan of the regulating ring, concomitantly with the rotation of the link ring eyes (1, 2) in such a manner that the center of the sphere (7) has the possibility to remain in the rotation plane of the crank.

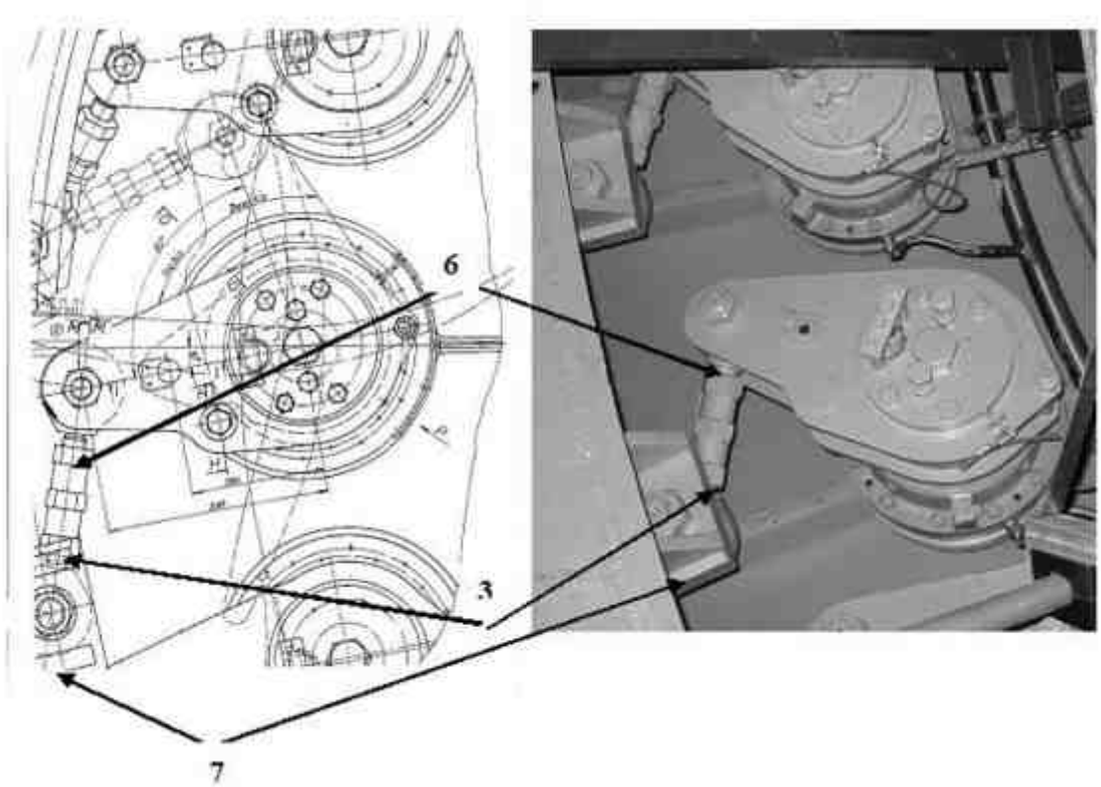

Fig. 2. Inner view of the regulating apparatus

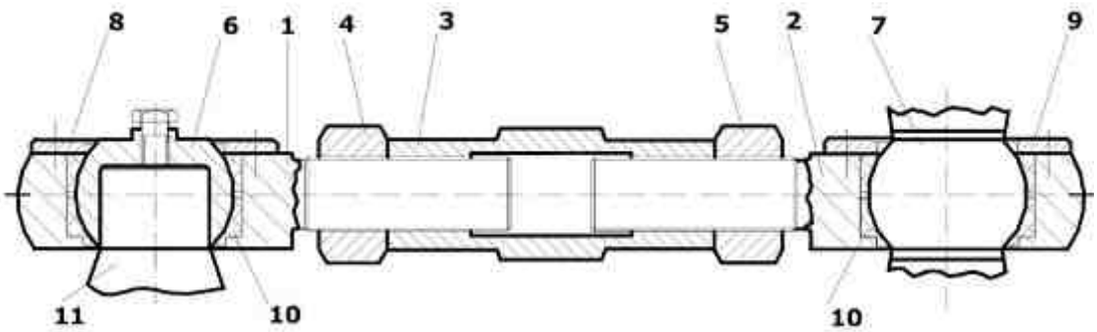

Fig.3. The guide vane connecting rod

The second function of the connecting rod is to close the dimension chain. This function is fulfilled only in the assembling periods and is carried out as follows: after assembling all the involved details in the closed position the connecting rod is put in its normal position. The lengths of the connecting rod being adjustable through the rotation of the sleeve (3), provided with left/right thread, the dimensional chain is closed in an easy way.

The crank is also a complex element, composed from 26 individual pieces. The most important are: the proper crank, the inner cover plate, the outer cover plate, the shearing bolt and the joint with the connecting rod (the spherical arm 7 in the Figure 3). The leading part played by the crank is to move the guide vane at the right angle demanded by the turbine. This movement is obtained as a result of the force delivered by the connecting rod. Supplementary the crank has also two secondary functions: a) the protection against the deterioration of the guide vane in the eventuality when a great solid object gets between two consecutive guide vanes and b) the possibility to rotate the guide vane in the opening direction even if the shearing bolt is fractured by the external forces. These two supplementary functions will be analyzed separately.

Guide vane protection. In order to fulfill this function the crank is realized from three distinct parts: the proper crank, the inner cover plate and the outer cover plate (Figure 1). These three parts are bounded together by three types of bolts: the shearing one, the massive support and two slender supports.

The shearing bolt is a cylindrical piece manufactured from steel (OLC 45), heat treated, with a diameter of 50 mm and provided with two shearing cross sections. These shearing sections are realized by cutting two notches at 60º (stress raisers) that reduces the diameter till 40 mm. If a massive solid object is caught between two consecutive guide vanes and the regulating apparatus is moved towards closing, these guide vanes cannot effectuate the movement. As a result, the oil pressure increases in the hydraulic actuating system together with the acting force delivered to the crank. If this force exceeds with 40…50% the normal value of the tension, the notched sections resistance is exceeded and the shearing bolt will be fractured. In this way the bounds between the proper crank and the cover plates are interrupted. The cover plates can follow the movement imposed by the regulating ring but in the same time the proper crank and the guide vane are not obliged to follow this movement.

Possibility to actuate the guide vanes even if the shearing bolt is fractured. The designer offered the possibility to move the guide vane toward opening even when the shear bolt is fractured. When the regulating ring is moved toward opening the body of the massive support enter in the 120º clearance provided in the crank arm (Figure 2) and allow the actuation of the system crank/guide vane. The movement towards closing is not possible and the guide vane can occupy casual positions dictated by hydrodynamic forces with the restriction given by the position of the massive support.

3. Possibilities for casual events

The shaft of the joining bolt (11) and the metallic sphere (6) are united by three threaded screws „M 16x35 group 5" (12) secured with Grower washers (13). For two till four guide vanes, namely for those placed at the lower part of the bulb, when the Grower washers are out of use the monolith (11)-(6) is compromised. As a result of the vibrations and without the Grower washers, all the M16x35 bolts get unscrewed and finally fall at the bottom of the bulb. Under the influence of gravity the assembly formed by the left thread link ring (1), the antifriction bushing (10), the lid (8) and the metallic sphere (6) can slide over the cylindrical journal of the bolt (11). For an easy assembling the fitting between the metallic sphere (6) and the cylindrical journal of the bolt (11) is H7/g6. Consequently the minimum clearance of the sphere is zero and the maximum clearance is 0.03 mm. The joining bolt journal minimum clearance is 0.013 and the maximum is 0.062. This means that the minimum clearance of the assembly is 0.013 mm and the maximum is 0.065 mm. The length of the journal being 54 mm, the maximum inclination in the first moment can reach a hexadecimal minute.

The total mass of the parts subjected to gravitations is about 19.914 kg. Taking into account the inclination of the thread link ring, the force in the direction of the journal axis is approximately 9,75 N, and can gradually rotate the metallic sphere in the antifriction bushing and finally the connecting rod fall from the joint. Evidently, this process is a slowly one, especially the unscrewing of the tree M16x35 bolts. An extremely critical circumstance is the fact that, during the periodic inspections, the intermediate phases of the detachment are very difficult to be observed.

Even the lost of the Grower washers cannot be observed at the periodical inspections. From discussions with the inspection personnel resulted that they found fragments of Grower washers in the bulb interior but they cant say if these fragments result from the assembling period or from the running period.

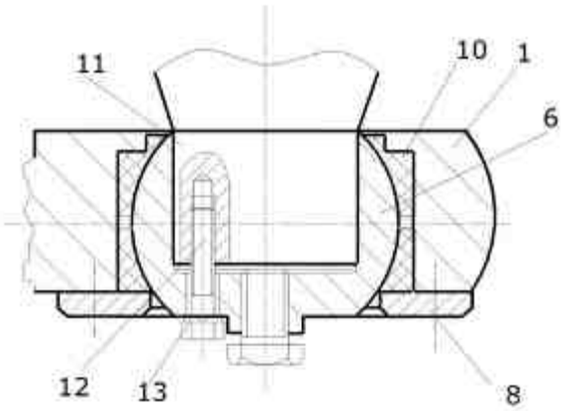

Fig. 4 Detail of the left thread link

In the literature [1] the Grower washers are recommended till the group 8.5. Because the used screws are in the group 5 they enter in the recommended interval. In [2] it is specified: "The Grower washer is a spitted one, manufactured from spring steels and in disassembled state the branches are in a far off position. This elastic washer is put between the part and the nut and is compressed by screwing the nut so that the sharp end penetrates both in the part and the nut. In this way the unscrewing of the nut is prevented. Although, this method does not offer an absolute assurance, so the assembly must be verified periodically." In [3] is mentioned: " The unscrewing of the hexagonal head bolt can be prevented by passing a wire through their heads." In the literature there are presented also other safety solutions as for example split plates applied to the screw head. This solution is difficult to be applied in our condition because the lack of space (the free end of the plate must be fastened by a distinct screw).

Upon our opinion, ensuring this very important bond only with Grower washers does not offer the necessary confidence and the detachment of the bond regulating ring-connecting rod, in peculiar conditions, can generate important injuries followed by expensive repair works. The fact that in this area were fond washer fragments leads to the conclusion that after the heat treatment they are in some cases to fragile so, they can crack and fall from the joint. Consequently, the bound can be detached by unscrewing of the three threaded screws.

A rough analysis of the probability for the connecting rod to go out from the regulating mechanism can be realized simply, by examining the possibility of inclining the right link ring in the distance between the crank plates. It resulted that the inclination of the connecting rod overcame 6º, which allow the metallic sphere (6) to go over the superior end of the joint bolt journal (11). Taking into account the gravity of such a situation it was decide to analyze carefully the connecting rod kinematics, which will be presented as a distinct chapter.

Another possible malfunction is generated by the rotation of the whole assembly sleeve (3) - securing nuts (4, 5) as a result of the vibrations. If the distance between the axes of the sphere (6) and the bolt (7) increases, the respective guide vane will be heavily pressed on the adjacent vanes, which leads to the deterioration of the tightness rubber cords. When the rotation is in the contrary direction (the length of connecting rod is reduced), in the closed position of the regulating mechanism, it remains a clearance between the vanes and important leakages can occur. In the other positions of the regulating apparatus, the hydrodynamic field is perturbed and the hydraulic efficiency of the turbine is reduced.

4. Kinematics analyses

Analyzing the constructive solution in Figures 1, 2, and 3 it can be observed that during the movement from the position complete closed to complete open the guide vanes imposes a three-dimensional movement of the connecting rod. In order to determine the correlation between the servomotor piston position „ä" and the guide vanes position „ã" the kinematical analyzes of the guide vane regulating apparatus is necessary. The kinematical scheme can be seen in Figure 5. The apparatus presents itself as a three-dimensional articulated quadrilateral ABCD with the cylindrical articulations A and D and spherical ones B and C. The articulations A and D allow the rotation around the guide vane axis respectively around the servomotor axis. The unchangeable rotational axis passes through the points A and D. The extremities B and D are mobile and perform evolutions on arcs of circle. These arcs of circles are placed on different space planes and form the á dihedral angles. The case analysis, in conformity with Figure 4, leads to the data presented in Table 1.

Table 1

AB [mm]	BC [mm]	BD [mm]	r [mm]	á [°]	å [°]	ö [°]	$O\hat{A}B$ [°]
500	500	2130	1880	60	-10	70	90

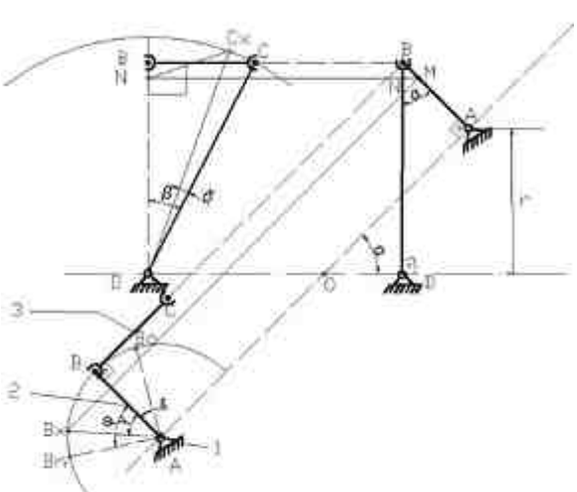

Figure 5. The kinematical scheme of the guide vane regulating apparatus

ã is the current angle for a random intermediate position

With the hypothesis of normal angles:

$$A\hat{B}C = C\hat{B}D = 90° \quad (1)$$

it is successively determined

$$AM = AB_x \cos(\gamma) \quad (2)$$

but

$$AB_x = AB \quad (3)$$

and

$$MB = AB - AM = AB(1-\cos\gamma) \quad (4)$$

$$MN = MB\sin\alpha = AB(1-\cos\gamma)\sin\alpha$$

From Ä B_xC_xN rectangular with $B_x\hat{N}C_x = 90^0$

result $\sin\omega = \frac{MN}{B_xC_x}$ $\hat{\omega} = B_x\hat{C}_xN$ where

with $B_xC_x = BC$

result $\sin\omega = \frac{AB(1-\cos\gamma)\sin\alpha}{BC}$ (5)

In this way it can be determined $\hat{\omega}$, angle made by the connecting rod with the crank plane of rotation in a position marked by the index x. From (6) result hat at the extremities of the servomotor piston stroke there are obtained the extreme values of the angle ù for the positions ã = 0 and not ã = å and respectively ã = ö. By replacing the numerical values for the analyzed case it was obtained $\omega_{\gamma=\varphi}$ =17,23°. For the detachment of the cylindrical journal (11) from the metallic sphere (6) (see Figure 3) is necessary a rotation angle ø = 5,906° measured in figure 3. Because, $\omega_{\gamma=\varphi} > \psi$ such a detachment becomes possible if there are not taken special measures to maintain the journal (11) bounded to the metallic sphere (6).

For the movement of the guide vanes from the position complete close ã = å to the position complete open it correspond both an angular movement and a stroke of the piston, which can be computed as follows.

The radius of the regulating ring is:

$$CD = \sqrt{BD^2 + BC^2} = 2187{,}898 \quad (6)$$

$$tg\beta = \frac{BC}{BD} = 0{,}234741784,\ldots \beta = 0{,}23056724\ rad = 13{,}21^0 \quad (7)$$

$$NC_x = B_xC_x\sqrt{1-\sin^2\omega} = \sqrt{BC^2 - AB^2\sin^2\alpha(1-\cos^2\gamma)^2} = \sqrt{250000\left[1-\frac{3}{4}(1-\cos\gamma)^2\right]} \quad (8)$$

BN = MN ctg á=AB (1-cosã) cos á (9)

$$ND = BD - BN = 2130 - 500\cdot(1-\cos\gamma)\frac{1}{2} \quad (10)$$

The point C_x fall at the intersection of two circles, one with the radius CD and the center in D and the other with the radius NC_x and the center in N. In an orthogonal system having D as origin, the coordinates of the point (x, z) are noted DO after Dx and DN after Dz (Figure 4), it results:

$$\begin{cases} z = \dfrac{DN^2 + DC^2 - r^2}{2DN} \\ x = \sqrt{DC^2 - z^2} \end{cases} \quad (11)$$

the angle $\hat{\delta}$ can be computed from:

$$\hat{\delta} = \hat{\beta} - arctg\frac{x}{z} \quad (12)$$

the arc length is:

$$C\hat{C}_x = DC\cdot\hat{\delta} \quad (13)$$

with the substitution ã = ö it results:

DN=1965,5 mm

$NC_n = 376{,}518$ mm

z = 2164, 417 mm

x = 319, 685 mm

$\hat{\delta} = 4{,}808°$

$\hat{C}C_n = 183{,}625\ mm$

The regulating ring circumferential stroke is , can be approximately computed from:

$$\hat{C}_0C_n \cong \hat{C}C_n\cdot\frac{\varphi+\varepsilon}{\varphi} = 182{,}624\cdot\frac{80}{70} = 208{,}713mm \quad (14)$$

An accurate value can be obtained in a way similar with that used for the point “n” and the point “O” and finally the stroke can be computed from:

$$\hat{C}_0C_n = \hat{C}C_n + \hat{C}_0C \quad (15)$$

In this way, we reach to the conclusion that the spatial movement of the connecting rod allows the detachment from the joining bolt if the Grower washers do not play their role.

4. Solutions for an increased reliability

From the analysis carried out on the conical guide vane regulating apparatus results that for the solution adopted by the designer the deterioration of a low cost piece (the Grower washer) can lead,

in favorable situations, to the detachment of the connecting rod from the regulating ring. In such a situation the respective guide vane has a free movement under the action of the hydrodynamic forces. The connecting rod, which remains bounded to the crank, follows a chaotic movement generated by the guide vane, perhaps amplified as the result of the articulation.

If by misfortune, the free end of the connecting rod is blocked by an other part there are possible great damages as for example: the fracture of the shearing bolt or the push of the crank into that of the guide vane situated in the proximity with the possibility to blocking up both guide vanes. As a consequence, occur important deterioration of some parts of the regulating apparatus.

Even if the detachment of the connecting rod is a slowly process it has the great disadvantage of not being easy to be seen, at the regular inspections. The deterioration becomes evident only when the injury is so great that the running of regulating apparatus is impossible.

Consequently there were proposed, for the connections of the regulating apparatus parts, two supplementary safety measures. The first, extremely economical and efficient, is that found in [3]: "passing a wire through the heads of the joining screws". As an experiment it was proposed also the more elegant solution to use Nord-Lock washers [4]. Those washers have the following advantages: assures maximum security for the bounding subjected to vibrations, they are not influenced by temperature and technical lubricants do not influence the blocking function. To avoid corrosion effects there were proposed the stainless steel washers (A4, AISI 316).

For preventing the uncontrolled modifications of the connecting rod lengths it was proposed to maintain the extremely simple but efficient solution proposed by the exploitation team, namely the welding of a metallic strip to bound the important fifth parts of the connecting rod (see the figure 3): the left link ring (1), the sleeve (3), the nuts (5 and 6) and the right link ring (2).

It was also recommended for the future a careful examination of the guide vane apparatus also from other points of view, especially the reliability of the tightness, the behavior of the journal bearings, the behavior of the crank details.

Conclusions

1. The analyzed guide vane apparatus has a robust construction.
2. The assurance of the bound between the connecting rod and the joining bolt only by Grower washers does not offer complete confidence although this solution is in general accepted in most references.
3. The kinematical analysis of the guide vane regulating apparatus shows that the connecting rod fulfills three-dimensional movements of great amplitudes. If the Grower washers suffer cracks the three screws, which connects the metallic sphere with the bolt of the regulating ring, are unscrewed. This fault can lead, in certain cases, to important damages of the regulating apparatus parts.
4. There were proposed two alternative solutions: the assurance by passing a wire through the heads of the joining screws or the assurance with Nord-Lock washers.
5. The solution adopted by the beneficiary to prevent the uncontrolled modifications of the rod length, by welding a strip along it, is considered adequate.
6. The careful examination of the guide vane apparatus also from other points of view, especially the reliability of the tightness, the behavior of the journal bearings, the behavior of the crank details is recommended in the future.

References:

1. M. Gafiþanu º.a.: Organe de Maºini vol I, Ed. Tehnicã, Bucureºti, 1999, p.191
2. C. Severineanu: Organe de Maºini, Ed. Did. º i Ped., Bucureºti, 1965, p.159
3. Gh. Manea: Organe de Maºini, Vol I, Ed. Tehnicã,. Bucureºti, 1970, p. 355
4. N. N. Kovalev: Ghidroturbinî, Maºghiz, Moskva, 1961, p. 224
5. M. Bãrglãzan, Turbine hidraulice º i transmisii hidrodinamice, Ed. Politehnica, Timiºoara, 1999, p.142
6.S. A. Granovski, a. o. Construcþii rasciot ghidroturbin, Izd. Maºinostronie, Leningrad, 1974, p162
7.G .A. Svinarev, Gorizontalnîe capsulnîe ghidroturbinî osevogo tipa, Izd. Naucova Dumca, Kiev, 1969, p. 152

DIAGRAME STANDARD CAUZE MULTIPLE – EFECT UNIC PENTRU ACȚIONAREA HIDRAULICĂ A DISPOZITIVELOR TEHNOLOGICE

STANDARD DIAGRAMS MULTIPLE CAUSES - EFFECT ONLY FOR HYDRAULIC DRIVE OF TECHNOLOGYCAL DEVICES

Prof. univ. dr. ing. Nicolae GHERGHEL - Universitatea Tehnicã „Gheorghe Asachi“ din Iaºi
Cercet. ?t. III drd. ing. Adrian-Constantin HANGANU - Universitatea Tehnicã „Gheorghe Asachi“ din Iaºi

ABSTRACT
In the context of research on the systemic approach to hydraulic drive of the technological devices to solve problems of quality in the field, and considering the conceptual graph model [19], systemic vision [20] and hierarchical description [22], previously developed for the hydraulic component of the technological devices, and also the purpose for which charts are used, in the paper, presented standard diagrams of multiple causes – unique effect, type Ishikawa, structured by components of the process and on the developed actuation force.
Keywords: causes – effect diagrams, technological devices, hydraulic

1. SCURTE CONSIDERAȚII ASUPRA DIAGRAMELOR CAUZĂ – EFECT

1.1. Definiție

În literatura de specialitate ºi în standarde [1], [2], [4] … [17], [24], [25], [27] … [45], se dau diferite definiþii sau descrieri ale *diagramelor cauză – efect*. Niciuna din aceste definiþii nu reflectã, însã, esenþa acestui tip de diagrame, în raport cu alte tipuri de diagrame utilizate în ºtiinþã, tehnicã etc., ºi nu are gradul de generalitate corespunzãtor variantelor de diagrame posibile. Pe baza analizei ºi sintezei acestor definiþii, în lucrarea proprie [18], se consideră cã *diagramele cauză – efect* pot fi definite ca o formã specificã de diagramã cu dreptunghiuri, sãgeþi ºi cuvinte, care evidenþiazã, în mod sintetic, cauzele (factorii, condiþiile, parametrii) posibili, care influenþeazã efectele, sau efectele posibile ale cauzelor, sistematizate pe *categorii (grupe, clase, familii)* majore ºi *subcategorii*, ºi relaþiile între acestea, precum ºi ierarhia acestora.

De asemenea, în aceeaºi lucrare [18], se consideră cã *diagramele cauză – efect* pot fi asimilate cu „*diagramele de idei*“, referitoare la cauzele posibile ale efectelor sau la efectele posibile ale cauzelor, în care ideile sunt exprimate prin cuvinte ºi sãgeþi.

1.2. Clasificare. Tipuri şi variante de diagrame cauză – efect

Analiza diagramelor cauzã – efect, prezentate în literatura actualã de *Controlul calității* [1], [2], [4] … [17], [24], [25], [27] … [45], ne-a condus la o clasificare unitarã, pe baze ºtiinþifice, a *diagramelor cauză – efect*, care a fost publicatã iniþial în anul 1998 [14**]. Unele dezvoltări ulterioare au fost publicate în lucrările [15] şi [16]. În tabelul 1, prezentăm ultima versiune a** clasificãrii *diagramelor cauză – efect*. Clasificarea ia în considerare tipurile/ variantele de diagrame introduse ºi teoretizate în lucrările [14**], [15], [16] şi [18] şi în alte lucrări în curs de redactare.**

2. Elaborarea unor diagrame standard cauze multiple – efect unic pentru acționarea hidraulică a dispozitivelor tehnologice

- Þinând seamã de modelul grafic conceptual ºi de viziunea sistemicã, elaborate pentru acþionarea hidraulicã a dispozitivelor tehnologice [19], [20], precum ºi de scopul pentru care se utilizeazã diagramele, considerãm cã, pentru acþionarea hidraulicã a dispozitivelor tehnologice, este oportunã elaborarea unor diagrame standard cauze multiple – efect unic, de tip Ishikawa, structurate pe componente (verigi, subsisteme) ale procesului (sistemului) ºi pe componentele forþei de acþionare dezvoltate.

Tabelul 1. Clasificarea generalã a diagramelor cauzã – efect

Criteriul de clasificare	Tipuri/ variante de diagrame cauzã ? efect	
1. Numărul cauzelor şi efectelor puse în relaţie în aceeaşi diagramă	? diagrame cauze multiple ? efect unic (diagrame CM ? EU)	
	? diagrame cauză unică ? efecte multiple (diagrama efectelor, diagrama consecinţelor) [diagrame CU ? EM]	
	? diagrame cauze multiple ? efecte multiple (diagrame CM ? EM)	
	? diagrame cauză unică ? efect unic (diagrame CU ? EU)	
2. Forma diagramelor	? diagramele cauză ? efect de tip „os (schelet, spinare) de peşte“, „arbore“, „fluviu“, ishikawa	
	? diagramele cauză ? efect de tip organigramă (arbore)	
	? diagramele cauză ? efect de tip tablou	
3. Modul/ gradul de structurare (organizare) a diagramelor	? diagrame cauză ? efect structurate (organizate)	pe componente (verigi, subsisteme) ale procesului (sistemului)
		pe stadii, etape, operaţii, faze, activităţi, secvenţe ale procesului
		pe stadii (etape, faze) ale ciclului de viaţă al produsului, respectiv ale „buclei calităţii“ sau ale „spiralei calităţii“
		pe caracteristici de calitate complementare (intermediare, secundare) ale produsului
		pe funcţii ale produsului
		pe alte aspecte/ elemente
		mixt
	? diagrame cauză ? efect nestructurate (neorganizate)	
4. Gradul de încredere în diagrame	? diagrame cauză ? efect primare (iniţiale, brute)	diagrame cauză ? efect primare (iniţiale, brute) simplificate
		diagrame cauză ? efect primare (iniţiale, brute) dezvoltate
	? diagrame cauză ? efect finale	
	? diagrame cauză ? efect „standard“ (generalizate, de referinţă)	
5. Complexitate a diagramelor	? diagrame cauză ? efect „simple“	
	? diagrame cauză ? efect asociate (combinate) cu fişe (CEDAC ? Cause Effect Diagram with Additional Cards)	
6. Gradul de detaliere a diagramelor	? diagrame cauză ? efect principale (totale, globale, integrale)	
	? diagrame cauză ? efect secundare (parţiale)	
7. Gradul de individualizare (particularizare, nominalizare) a cauzelor şi efectelor	? diagrame cauze multiple individualizate ? efecte multiple individualizate	
	? diagrame cauze multiple neindividualizate ? efecte multiple individualizate	
	? diagrame cauze multiple individualizate ? efecte multiple neindividualizate	
	? diagrame cauze multiple neindividualizate ? efecte multiple neindividualizate	
8. Gradul de selecţie a cauzelor şi efectelor	? diagrame cauză ? efect neselectate	
	? diagrame cauză ? efect selectate	

- Conceptul de *diagrame „standard“ (generalizate, de referinţă)* a fost introdus, de cãtre autor, în lucrările [15] º i [16] º i dezvoltat în lucrarea [18]. *Diagramele „standard“* se deosebesc de *diagramele primare* (iniţiale, brute), sau chiar de *diagramele finale*, prin acurateţe, rigoare, cizelare, claritate, prin faptul cã iau în considerare cauze/ factori validaţi/ confirmaţi prin cercetări teoretico-experimentale, prin terminologia º tiinţificã º i tehnicã unitarã, riguroasã, prin gradul ridicat de încredere.

- *Diagramele cauze multiple – efect unic (diagramele CM – EU)* pun în relaţie, în aceeaº i diagramã, multiplele cauze ale unui efect unic [14**], [18]**.

- Cele mai cunoscute, dintre acestea, sunt cele sub formã de *„os (schelet, spinare) de peşte“, „arbore“, „fluviu“, de tip Ishikawa*. Aceastã formã este, totuº i, destul de liberã. S-au impus diverse variante de *diagrame Ishikawa*, care se diferenţiazã, în ce priveº te structura, prin modul în care se structurează (organizează, sistematizează) cauzele/ factorii, în funcţie º i de scopul pentru care se utilizează diagramele.

- În literatura de specialitate °i în standarde, se prezintã diferite schematizãri/ simbolizãri °i **forme generale (simplificate/** iniþiale; **dezvoltate**) ale ***diagramelor cauze multiple – efect unic*, de tip Ishikawa,** structurate**.**

Prin generalizarea acestor forme şi ţinând seamã de cele de mai sus, precum °i de contribuþiile proprii privind cauzele, factorii °i efectele, s-a propus, pentru această variantă de *diagrame cauze multiple – efect unic*, o formã generalã publicatã iniþial în lucrarea [15]. Ultima variantã a acesteia este datã în fig. 1 [18].

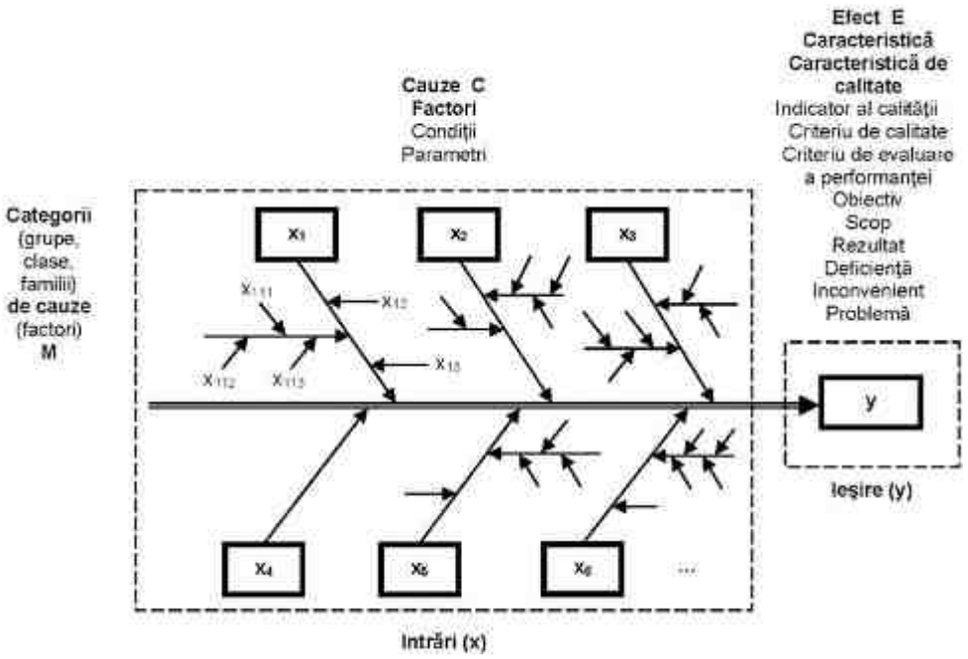

Fig. 1. Forma generalã propusã pentru diagramele cauze multiple – efect unic, tip Ishikawa, structurate pe componente ale procesului [15], [18]

- Acestei variante de *diagramă cauză – efect* îi corespunde, în limbaj matematic, *funcţii de funcţii* de forma [14], [15], [18]:

$$y = y(x_1, x_2, \ldots), \quad (1)$$

în care: $x_1 = x_1(x_{11}, x_{12}, \ldots)$; $x_{11} = x_{11}(x_{111}, x_{112}, \ldots)$; …;

$$E = E(C_1, C_2, \ldots), \quad (2)$$

unde: $C_1 = C_1(C_{11}, C_{12}, \ldots)$; $C_{11} = C_{11}(C_{111}, C_{112}, \ldots)$; …;

$$E = E(M_1, M_2, \ldots), \quad (3)$$

în care: $M_1 = M_1(M_{11}, M_{12}, \ldots)$; $M_{11} = M_{11}(M_{111}, M_{112}; \ldots)$; … etc.

- În cazul în care, dintr-o astfel de diagramã, se iau în considerare numai *cauzele fundamentale* °i *controlate*, aceste funcþii constituie *forma generală implicită a modelului matematic ce trebuie elaborat, a ecuaţiei de regresie* [14], [15].

- În general, pentru ca o astfel de diagramã sã fie utilã, eficace, cauzele/ factorii trebuie sã fie evidenþiaþi cu un grad de detaliere mai ridicat.

În principiu, pe baza surselor enumerate în lucrarea proprie [18] ?i redate sintetic în organigrama propusã în fig. 2, s-au identificat cauzele °i factorii posibili, care s-au pus în relaþie cu efectele.

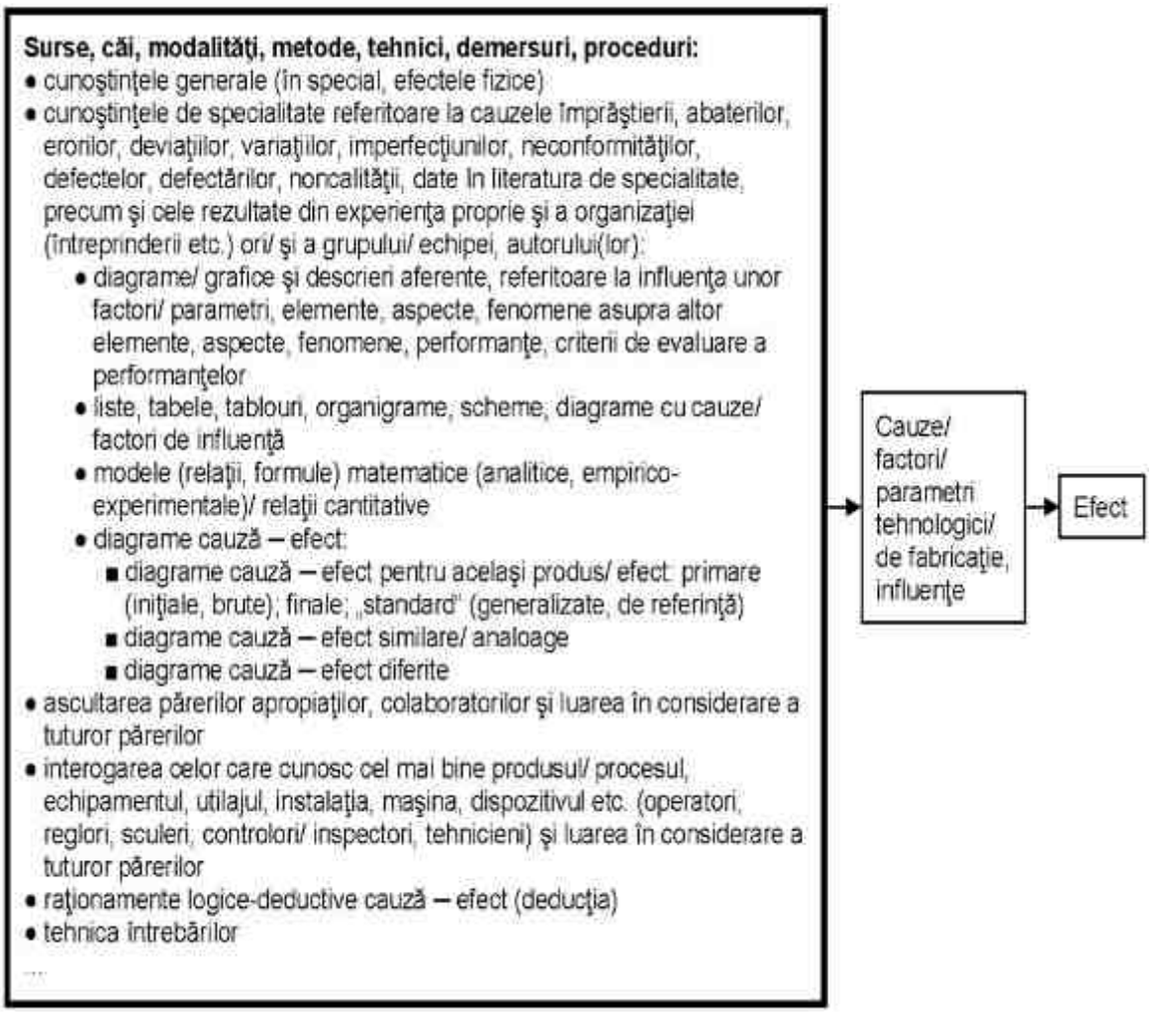

Fig. 2. Surse, căi, modalităţi, metode, tehnici, demersuri, proceduri de identificare a cauzelor/ factorilor

- În ansamblu, pentru elaborarea diagramelor, s-a aplicat metodologia proprie „25E" (în 25 de etape), publicată în lucrarea [18].
S-au elaborat, astfel, diagramele standard cauze multiple – efect unic, de tip Ishikawa, pentru acţionarea hidraulică a dispozitivelor tehnologice, structurate pe componentele (verigile, subsistemele) acţionării hidraulice a dispozitivelor tehnologice şi pe componente ale forţei de acţionare dezvoltate.

- Diagrama standard cauze multiple – efect unic, de tip Ishikawa, pentru acţionarea hidraulică a dispozitivelor tehnologice, structurată pe componentele (verigile, subsistemele) acţionării, este dată în fig. 3.

- Diagrama standard cauze multiple – efect unic, de tip Ishikawa, pentru acţionarea hidraulică a dispozitivelor tehnologice, structurată pe componente ale forţei de acţionare dezvoltate, este prezentată în fig. 4.

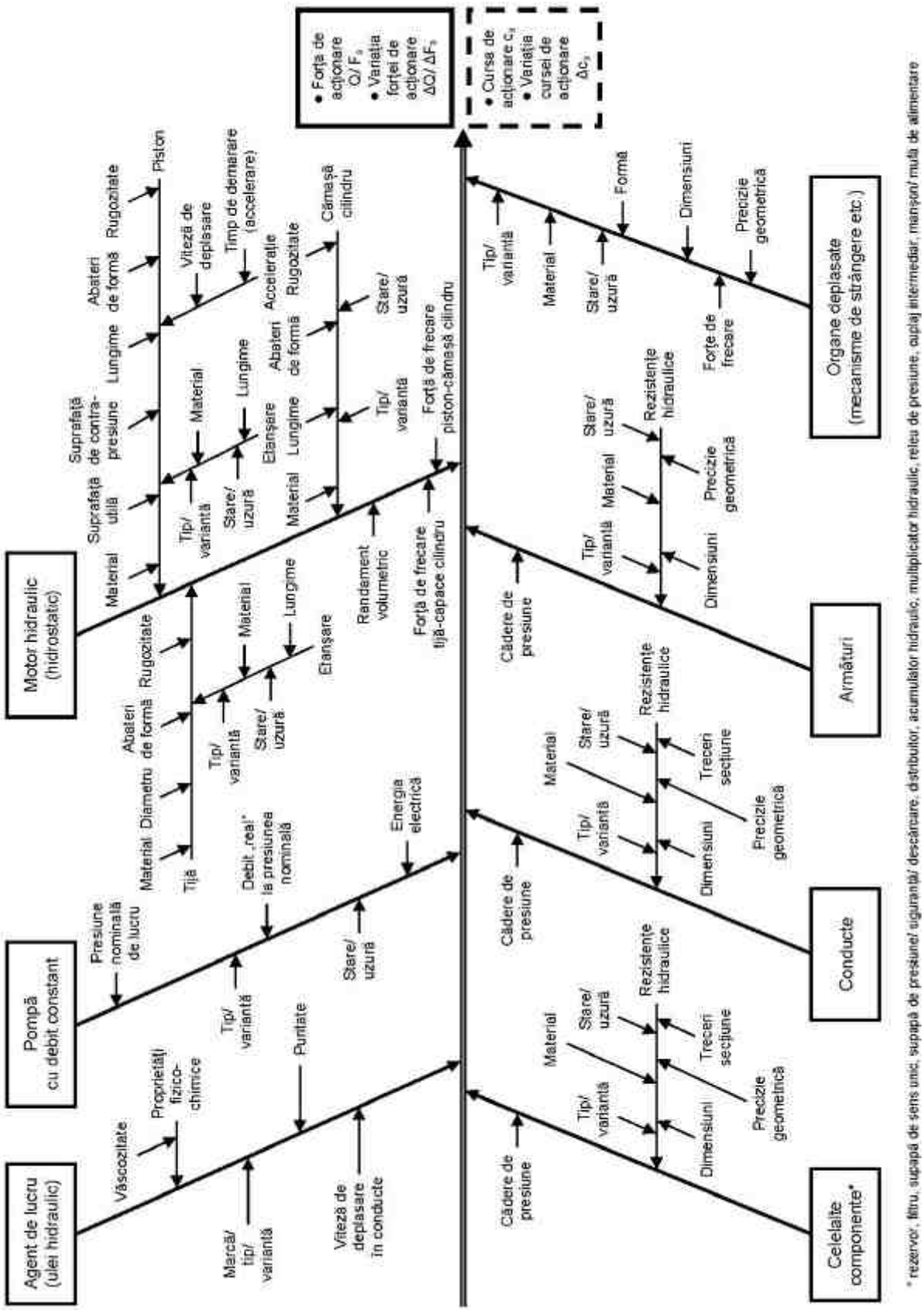

Fig. 3 – Diagrama standard cauze multiple – efect unic, de tip Ishikawa, pentru acţionarea hidraulicã a dispozitivelor tehnologice, structuratã pe componentele acţionãrii.

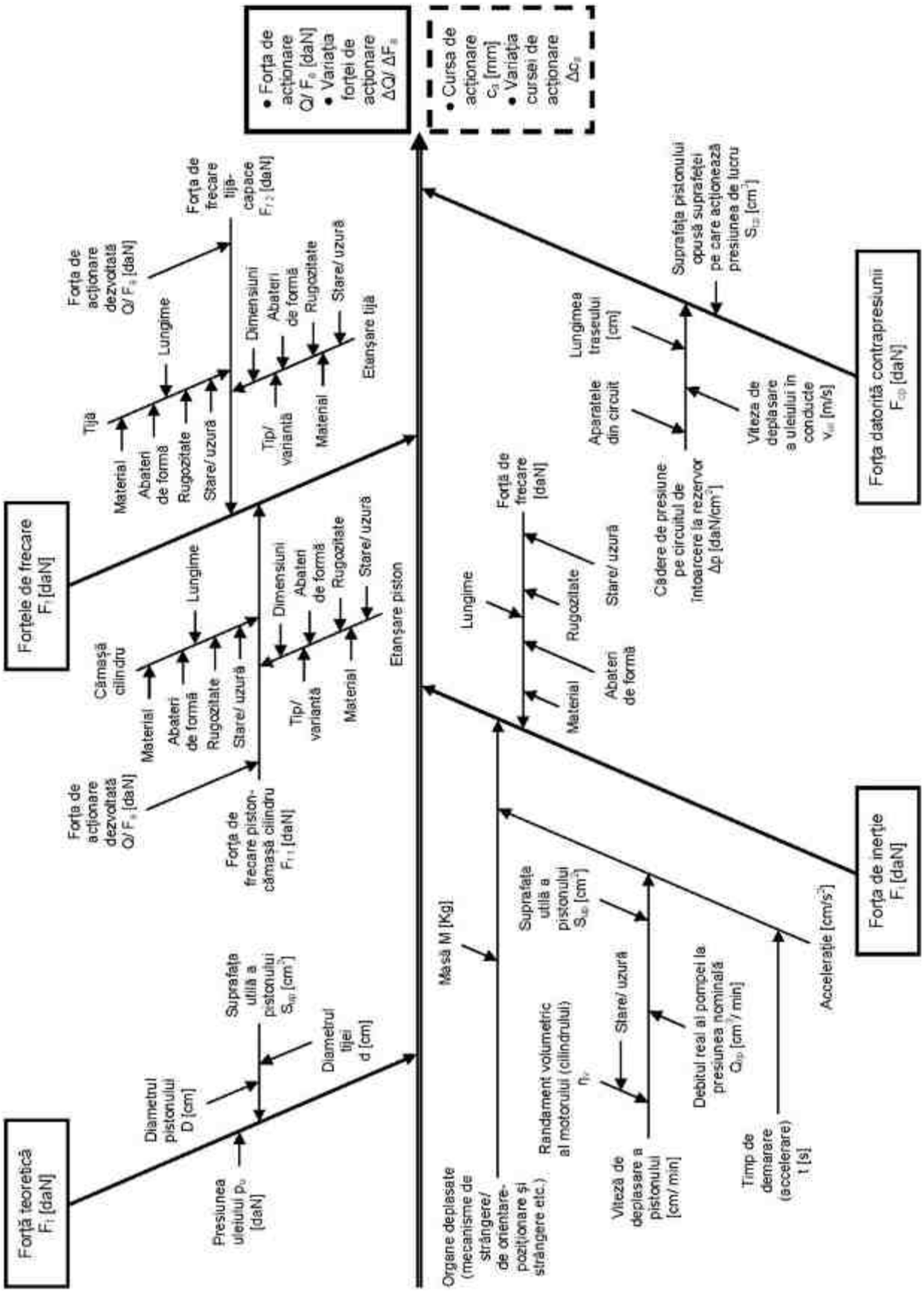

Fig. 4 – Diagrama standard cauze multiple – efect unic, de tip Ishikawa, pentru acţionarea hidraulică a dispozitivelor tehnologice, structurată pe componentele forţei dezvoltate.

3. IMPORTANȚA ŞTIINȚIFICĂ ŞI APLICATIVĂ A DIAGRAMELOR STANDARD CAUZE MULTIPLE – EFECT UNIC PENTRU ACȚIONAREA HIDRAULICĂ A DISPOZITIVELOR TEHNOLOGICE

- *Diagramele standard cauze multiple – efect unic*, elaborate pentru acționarea hidraulică a dispozitivelor tehnologice, ca orice diagramă de acest gen, prezintă importanța științifică și aplicativă cvasiunanim recunoscută. Pot fi utilizate, aplicate, în investigarea, identificarea, evidențierea cauzelor efectelor considerate, în [14], [18]:

– *controlul calității* în sens larg – planificarea (concepția-proiectarea, prescrierea, specificarea), controlul, asigurarea, îmbunătățirea calității – , respectiv în *Ingineria calității*, în rezolvarea *problemelor de calitate*;

– clasificarea proceselor/ produselor;

– conducerea discuțiilor/ dezbaterilor;

– investigarea nivelului tehnologic al personalului;

– întocmirea *diagramelor Pareto* pentru cauze sau a unor *diagrame cauză – efect asociate cu fişe (CEDAC);*

– cercetarea științifică; considerăm că *diagramele cauze multiple – efect unic* sunt cel puțin la fel de utile în cercetarea științifică, ca și în rezolvarea *problemelor de calitate*, în abordarea unor teme de studiu/ cercetare ce vizează analiza, sinteza, optimizarea, standardizarea unor sisteme (produse, procese etc.), cum ar fi:

– influența unor factori asupra performanțelor proceselor;

– stabilirea factorilor/ parametrilor optimi ai proceselor – optimizarea proceselor;

– educație, didactică, formarea profesională.

- Diagramele standard cauze multiple – efect unic, elaborate pentru acționarea hidraulică a dispozitivelor tehnologice, prezentate în lucrarea de față, alături de diagramele standard cauză unică – efecte multiple, pentru acționarea hidraulică a dispozitivelor tehnologice [24], conceptele „schemă de strângere dezvoltată“ și „schemă de acționare a dispozitivelor tehnologice“ [23], modelul grafic conceptual al acționării hidraulice a dispozitivelor tehnologice [19], viziunea sistemică asupra acționării hidraulice a dispozitivelor tehnologice [19], descrierea ierarhică a acționării hidraulice a dispozitivelor tehnologice [22], metodologia de concepție-proiectare creativă a acționării hidraulice a dispozitivelor tehnologice [21], constituie fundamente ale „abordării sistemice a acționării hidraulice a dispozitivelor tehnologice“, ale rezolvării problemelor de calitate, ale cercetării științifice și ale formării profesionale, la nivelul cel mai înalt, în domeniu.

BIBLIOGRAFIE

1. **Alexis J.**, *Metoda Taguchi în practica industrială*. Bucureşti: Ed. Tehnică, 1999.
2. **Amitava M.**, *Fundamentals of quality control and improvement*. New York: Macmillan, 1993.
3. **Baron T.**, *Analiza factorilor care influențează calitatea produselor cu ajutorul coeficienților de pondere*. St. și cercet. de calcul ec. și cibernet. ec., nr. 5, 1969.
4. **Basu R.**, *Implementing Quality: A Practical Guide to Tools and Techniques. Enabling the power of operational excellence*. Australia, Canada, Mexico, Singapore, Spain, United Kingdom: Thompson, 1994.
5. **Bohosievici C.**, *Asigurarea calității*. Chișinău: Ed. Tehnica-Info, 2001.
6. **Bohosievici C.**, **Chirilă V.**, **Merticaru V. V.**, *Managmentul calității – componentă majoră a conținutului strategiei de fabricație*. În: Managementul schimbărilor tehnologice în construcția de mașini. Bucureşti: Ed. Academiei, 2001.
7. **Cănănău N.**, **Gurău Gh.**, **Gonzales Barajas A.**, *Sisteme de asigurare a calității*. Iași: Junimea, 1998.

8. **Cănănău N.**, **Gurău Gh.**, **Gonzales Barajas A.**, **Cazacu N.**, *Instrumentele calității. Tehnici preventive*. Galați: Ed. Fund. Univ. „Dunărea de Jos“, 2000.
9. **Dulhai Gh.**, **Gherghel N.**, *Diagrama cauză – efect, instrument de investigație în controlul calității eşapamentului pentru autoturisme*. Tehnomus X. Tehnol. și produse noi în constr. de mașini., Vol. V, Secțiunea Calit. și fiabilit., Suceava, 28 – 29 mai 1999, p. 138 – 145.
10. **Enătescu A.-M.**, **Enătescu M.-A.**, *Calitate. Terminologie comentată*. București: Ed. Tehnică, 2000.
11. **Forman B.**, *Manualul calității – instrument strategic al abordării calității.* București: Ed. Tehnică, 1988.
12. **Fukuda R.**, *CEDAC. A Tool for Continous Systematic Improvement.* Portland, Oregon: Productivity Press, 1996.
13. **Galgano A.**, *La qualita totale ...,* Milano: Il Sole 24 Ore Libri, 1993.
14. **Gherghel N.**, ***Diagrame cauză-efect*. În: Evaluarea şi controlul calității, Ed. Junimea, Iaşi, 1998, p. 145 – 157.**
15. **Gherghel N.**, **Seghedin N.**, *Considerații asupra diagramelor cauză – efect utilizate în controlul calității.* Tehnomus X. Tehnol. și produse noi în constr. de mașini., vol. V, Secțiunea Calit. și fiabilit., Suceava, 28 – 29 mai 1999, p. 122 – 129.
16. **Gherghel N.**, *Noi tipuri şi variante de diagrame cauză-efect pentru controlul calității.* Tehnomus X. Tehnol. și produse noi în constr. de mașini., vol. V, secțiunea Calit. și fiabilit., Suceava, 28 – 29 mai 1999, p. 130 – 137.
17. **Gherghel N.**, **Amariței D., Humă C.-L.**, ***Ratuş D., Isodor I.,*** *Eaborarea unei diagrame standard cauză-efect pentru abaterile dimensionale/ geometrice la prelucrarea suprafețelor conice*. *Sesiunea ştiințifică studențească a Catedrei Maşini-unelte şi Scule a Universității Tehnice „Gh. Asachi“ Iaşi, din 30.05.2005*.
18. **Gherghel N.**, *Ingineria calității. Aplicații de sinteză şi teste*. Iași: CERMI, 2006.
19. **Gherghel N.**, **Hanganu A.-C.**, *Model grafic conceptual al acționării hidraulice a dispozitivelor tehnologice*. Bul. Inst. Polit. Iași, publicat de Univ. Tehn. „Gh. Asachi“ Iași, tomul LII (LVI), fasc. 5D, secția Constr. de mașini., 2006, p. 1391 – 1397.
20. **Gherghel N.**, **Hanganu A.-C.**, *Viziune sistemică asupra acționării hidraulice a dispozitivelor tehnologice*. Bul. Inst. Polit. Iași, publicat de Univ. Tehn. „Gh. Asachi“ Iași, tomul LII (LVI), fasc. 5D, secția Constr. de mașini., 2006, p. 1399 – 1407.
21. **Gherghel N.**, **Hanganu A.-C.**, *Metodologie de concepție-proiectare creativă a acționării hidraulice a dispozitivelor tehnologice*. Salonul Internațional al Invențiilor, Cercetării și Transferului Tehnologic INVENTICA 2006 – A XVIII-a Conferință Internațională de Inventică „Cercetări și tehnologii inovative performante“, Ed. Performantica, Iași, 2006, p. 519 – 524.
22. **Gherghel N.**, **Seghedin N.**, **Hanganu A.-C.**, *The Hierarchical Description of the Technological Devices' Hydraulic Action*. Bul. Inst. Politehn. Iași, publicat de Univ. Tehn. „Gh. Asachi“ Iași, tomul LIII (LVII), Supliment, secția Constr. de mașini., 2007, p. 245 – 254.
23. **Gherghel N.**, **Hanganu A.-C**., *Clarificări, definiții, modele grafice şi exemplificări privind conceptele „schemă de strângere dezvoltată“ şi „schemă de acționare a dispozitivelor tehnologice“*. Tehnomus XIV. Tehnol. și prod. noi în constr. de mașini. A XIV-a conf. și t. internațională, Suceava, 4 – 5 mai, 2007, Ed. Univ. Suceava, 2007, p. 91 – 56.
24. **Gherghel N.**, **Hanganu A.-C.**, *Elaborarea unor diagrame standard cauză unică – efecte multiple, de tip „arbore“, pentru acționarea hidraulică a dispozitivelor tehnologice*. Hidraulica, nr. 1 (21), martie 2008, p. 7 – 21.
25. **Ghersini S.**, *Qualita & Affidabilita nella pratica industriale*. Milano: Tecniche nuove, 1988.
26. **Giura Al.**, **Gherghel N.**, *The Use of Value Analyisis and Value Engineering for Manufacturing Processes Variability Improvement*. Bul. Inst. Politehn. Iași, tomul XLIX (LIII), fasc. 1 – 2, secția Constr. de mașini., 2003, p. 135 – 144.
27. **Ishikawa K.**, *Guida al controlle di qualita*. Milano: Franco Angeli, 1995 (1998).
28. **Juran J. M.**, **Gryna F. M. jr.**, *Calitatea produselor. Tratat practic de planificare, proiectare, realizare şi control*. București: Ed. Tehnică, 1973.
29. **Juran J. M.** și a., *Quality Control Handbook*, Third Ed. New York: McGraw-Hill, 1974.
30. **Juran J. M.**, *Planificarea calității*. București: Teora, 2000.
31. **Juran J.M.**, *Supremația prin calitate. Manualul directorului de firmă*. București: Teora, 2002.

32. **Kume H. (ed.) ş. a.,** ***Metodi statistici per il miglioramento delle qualita*****.** Torino: **ISEDI,** 1988.
33. **Mitonneau H.**, *O nouă orientare în managementul calităţii: şapte instrumente noi*. Bucureºti: Ed. Tehnicã, 1998.
34. **Noyé D.,** ***Ghid*** *practic pentru controlul calităţii. Principii, metode, mijloace*. Bucureºti: Ed. Tehnicã, 2000.
35. **Périgod M.**, *Etapele calităţii*. *Demersuri şi instrumente.* Bucureºti: Ed. Tehnicã, 1997.
36. **Proctor T.**, *Elemente de creativitate managerială*. Bucureºti: Teora, 2000.
37. **Pruteanu O.**, **Bohosievici C.**, **Iordăchescu D.**, **Ghiţă E.**, **Machado V. A. Cruz**, *Managementul calităţii totale*. Iaºi: Ed. Junimea, 1998, p. 166 – 168.
38. **Pruteanu O.**, **Bohosievici C.**, **Gherghel N.**, **Grămescu T.**, **Iordăchescu D.**, **Ghiţă E., Teti R.**, **Machado V. A. Cruz**, *Managementul şi controlul calităţii*. Chiºinău: Tehnica-Info, 2000, p. 146 – 147.
39. **Sandholm L.**, *Total Quality Management*. Lund (Sweden): Studentlitteratur, 2000.
40. SR ISO 9004-4 + A1: 1996. *Managementul calităţii şi elemente ale sistemului calităţii. Partea 4: Ghid pentru îmbunătăţirea calităţii*.
41. **Sturzu A.**, **Roman I.**, **Joiţa P.**, *Calitatea şi fiabilitatea produselor*. *Tehnica măsurărilor de specialitate în construcţia de maşini*. Bucureºti: Ed. Did. ºi Ped., 1996.
42. **Tarău I.**, **Gherghel N.**, **Grămescu T.**, **Teti R.**, *Evaluarea şi controlul calităţii*. Iaºi: Junimea, 1998.
43. **Trandafir M.**, **Antonescu V.**, *Calitatea*. *Metode şi tehnici de lucru. Analiză, evaluare, control.* Bucureºti: O.I.D. – I.C.M., 1994.
44. **Vasiliu F.**, **Verciuc N.**, *Metode grafice pentru analiza calităţii produselor*. Bucureºti: Ceres, 1983.
45. **Vasiliu F.**, *Controlul modern al calităţii produselor*. Bucureºti: Ceres, 1987.

PREAMPLIFICATOARE FLUIDICE

FLUIDS PREAMPLIFIERS

Matem. Ing. Gabriel RÃDULESCU *; Drd Ing. Radu RÃDOI*;
Ing. Niculaie MIHAI *

*INOE 2000-IHP

Abstract: *The article presents three types of fluids preamplifiers: pneumatic nozzle pallets preamplifier, pneumatic power preamplifier and hydraulic mobile nozzle preamplifier. It presents the role, composition, characteristics and calculation formulas of their operating parameters.*

Rolul preamplificatoarelor: este de a transforma un semnal slab (proporţional electric sau pneumatic în semnal de comandã) în cadrul servosistemelor de comandã.

1 Amplificatorul pneumatic ajutaj-paletã (Fig 1)

Amplificatorul se compune din trei părţi distincte:

(1) Ansamblul ajutajului care conţine diuza de calibrare R_1 şi ansamblul de rezistenţe R_2;
(2) Consumatorul;
(3) Paleta oscilantã.

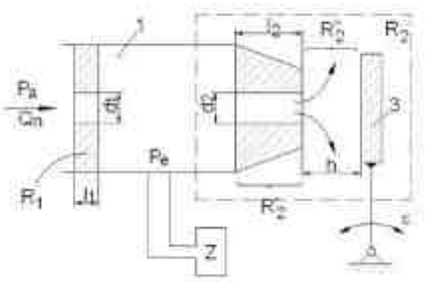

Fig 1

R_1 - rezistenţa pneumaticã fixã;
R_2 - rezistenţa pneumaticã variabilã

$$R_2 = \underset{\text{fix}}{R_2'} \; U \; \underset{\text{variabil}}{R_2''}(h)$$

Semnal de ieşire P_e, semnalul de intrare $h(\varepsilon)$

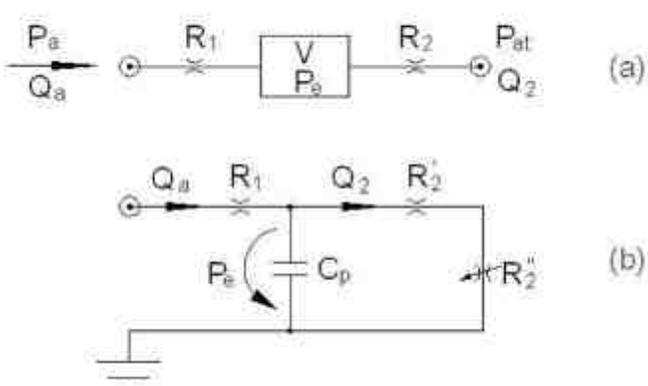

S-a considerat $p_{atm} \cong 0$

Fig 2

σ - constanta de timp; (V - volumul incintei; R constanta aerului; T temperatura absolutã; α_1, α_2 coeficienţi de debit pentru rezistenţele R_1 şi R_2).

Fig 2 (a) reprezintã un circuit pneumatic de întârziere de ordin I. În ipoteza curgerii laminare se aplicã analogia electropneumaticã Fig 2 (b)

Ecuaţia circuitului de întârziere:

$$\frac{V}{RT}\cdot\frac{1}{\alpha_1+\alpha_2}\cdot\frac{dp_e}{dt}+p_e=\frac{\alpha_1}{\alpha_1+\alpha_2}p_a \qquad \begin{cases} \dfrac{V}{RT(\alpha_1+\alpha_2)}=\sigma \\ \dfrac{\alpha_1}{\alpha_2+\alpha_1}=K \end{cases}$$

K coeficientul de divizare al presiunii p_a în raport cu R_1 şi R_2 . Constructiv camera de legãturã are V mic deci σ se poate neglija, deci:

$$p_e = Kp_a \Rightarrow Q_a = Q_2$$

considerând cã în regim staþionar $Q_c = 0$ (incintã închisã):

$$Q_a = \frac{p_a}{R_1 + R_2' + R_2''};\ p_e = p_a - R_1 Q_a \Rightarrow p_e = p_a - R_1 \frac{p_a}{R_1 + R_2}$$

Caracteristica este redatã de Fig 3.

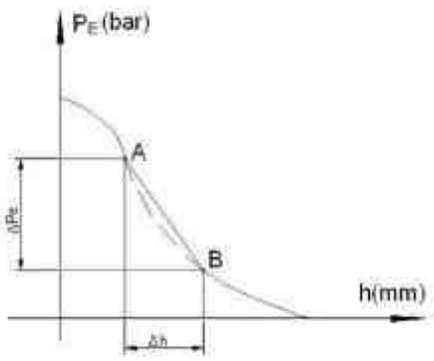

Fig 3

Caracteristica staticã $p_e = f(h)$ în condiþiile neglijãrii capacitãþilor º i $p_{atm} \cong 0$ este puternic cãzãtoare, neliniare.

Alimentarea amplificatoarelor din construcþia aparatelor pneumatice de automatizare la presiunea *1,4 bar*.

La $h = 0 \Rightarrow R = \infty$

$$h \uparrow R_2 \downarrow \Rightarrow P_E \downarrow$$

$$h = \frac{d_2}{4} \Rightarrow R = R_2' \ (R_2'' \cong 0)$$

În practicã se delimitează o zonã liniarã *AB* pe caracteristica staticã unde se stabileºte punctul optim de funcþionare.

2. <u>Amplificatorul pneumatic de putere</u> (Fig 4)

a) Convertorul electro-pneumatic ELA 104 se compune constructiv din: Corpul exterior în camerã superioarã (*E*) se gãseºte membrana (*M*) de suprafaþã S_{ef} având o întãriturã centralã, în camera inferioarã (*G*) se gãseºte bila (*B*) care la bazã se sprijinã iar sus este împinsã de centrala schimbându-i poziþia în raport cu ajutajul (*D*).

Principiul constructiv este cel al divizorului de presiune format din rezistenþele R_1 *şi* R_2 tip bulã cilindru. Modificarea divizorului se face prin deplasare în sus º i jos a bilei sub acþiunea membranei elastice (*M*) care este acþionatã de p_i. Existã relaþia:

$$p_e = p_a \frac{R_2}{R_1 + R_2}, \qquad p_e = \begin{cases} 0 \text{ cand } R_2 = 0; \\ p_e \text{ cand } R_1 = 0 \end{cases}$$

Pe baza caracteristicii $p_e = f(p_i)$ se pune în evidenþã coeficientul de amplificare în presiune:

$$K_p = \frac{\Delta p_e}{\Delta p_i}$$

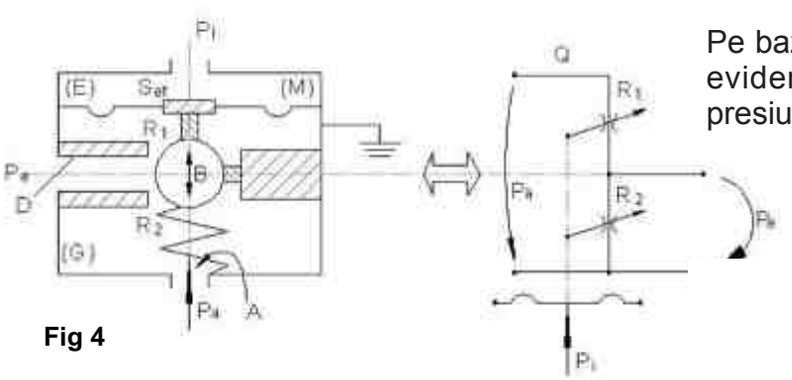

Fig 4

b) <u>Studiu experimental al amplificatorului pneumatic de putere</u>

Schema utilizatã conform Fig 5 (amplificatorul ELA 140) în care:

FR1, FR2 filtre reductoare;
M_1 M_2 M_3 manometre;
A amplificator de putere;
C(EE) camerã închisã (element execuþie)

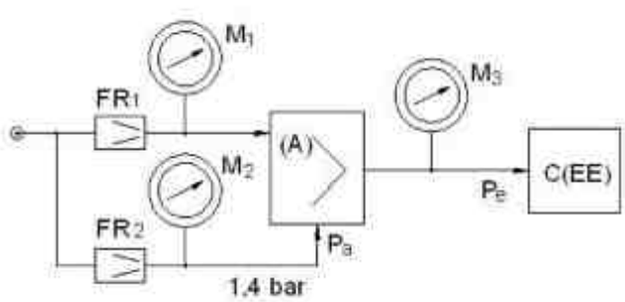

Fig 5

Mãsurãtorile:

- Se ridicã p_i la 0,3 bar ($p_e < 0$) º i se scade în trepte cât mai mici pânã la 0 bar [þinând cont de panta negativã a caracteristicii $p_e = f(p_i)$];
- Se reprezintã grafic º i se calculeazã amplificarea de presiune în zona liniarã a caracteristicii, cu relaþia:

$$K_p = \frac{\Delta p_e}{\Delta p_i}$$

c) Caracteristicile statice ale amplificatorului ajutaj paletã combinat cu un amplificator de putere (Fig 6)

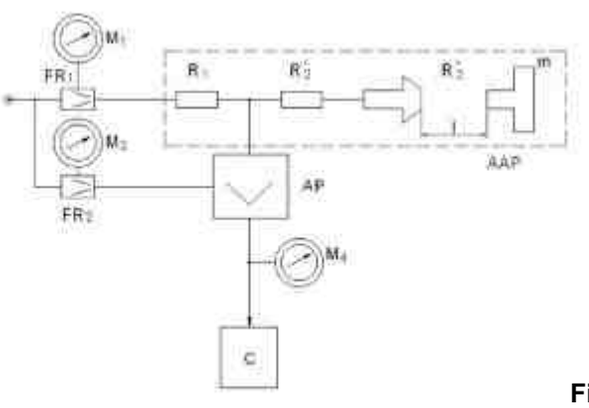

Fig 6

AAP amplificator ajutaj-paleta;
AP amplificator de putere

- La presiunea p_a *=1,4 bar* se fac citirele manometrelor modificând „*h*" cu micrometrul (*m*);
- Se reprezintã grafic $p_{e1} = f(h)$, $p_{e2} = f(h)$, $p_{e2} = f(p_{e1})$. Se concluzioneazã privind rezultatele.

Amplificatorul hidraulic cu ajutaj mobil

Schema semiconstructivã (Fig 7) prezintã urmãtoarele categorii de date:

- Componenta constructivã (Fig 7 a): (1) magneþi permanenþi, (2) armãturã mobilã, (3) bobine, (4) bucº e arc, (5) injector, (6) suport tijã de reacþie, (7) diuze, (8) tije de reacþie, (9) receptor-distribuitor jet, (10) element filtrant.
- Detalierea constructivã a injectorului (Fig 7 b) cu dimensiunile caracteristice: l_{inj} braþul injectorului, d_0 diametrul ajutajului, L_z întrefierul injector-receptor;
- Date numerice corespunzãtoare gamelor de presiuni uzuale (Fig 7 c)

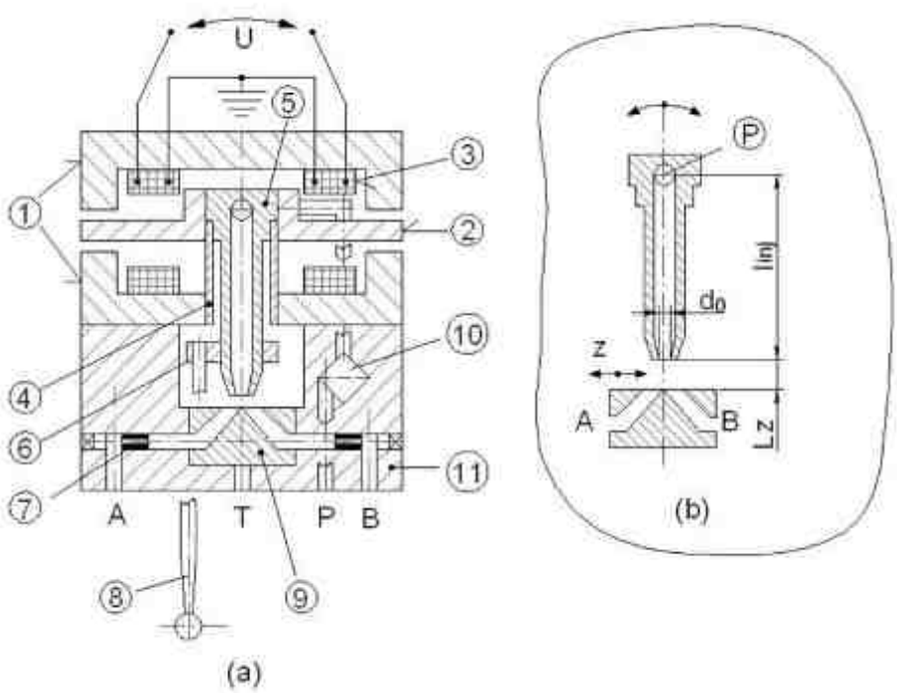

Fig 7

p_0 (Mpa)	l_{inf} (mm)	d_0 (mm)	L_z (mm)
20	20	0,2	0,02
10 ÷ 12	25...30	1,2	0,05
0,6 ÷ 0,8	150...170	2	0,4

- Condiții constructive: poziția (2) făcută din fier fără remanență, poziția (9) din material cu rezistență înaltă la eroziune (eventual metaloceramic), poziția (4) din bronz cu beriliu, poziția (10) finețe de filtrare > 10 ì m.

Observație: Fig 7 considerată ca atare, poate constitui servovalve cu două etaje: motor de cuplu și etaj amplificare cu ajutaj mobil.

- Condiții de funcționare

a) puterea semnalului electric de intrare:

$$N_e = u \cdot i_{max} = 12 \cdot 0{,}05 = 0{,}6w$$

b) Pentru determinarea puterii hidraulice de ieșire:

Se consideră de referință datele corespunzătoare al etajului de amplificare (sertar buș e) al servovalvelor cu preamplificare duză paletă pentru calculul debitului:

- Cursa maximă a sertarului $C_{max} = 0{,}5\ mm$;
- Pragul de insensibilitate $P_i = 1\%$;
- Frecvența de lucru $f = 50\ Hz$;
- Diametrul sertarului $D = 20\ mm$;
- Acoperirea sertarului este dată de:

$$a^+ = P_i C_{max} = 0{,}01 \cdot 0{,}5 \rightarrow 5\mu m$$

-Viteza sertarului este (x deplasarea sertarului)

$$v = \dot{x}(0) = x_s \frac{\omega}{10}$$, în care:

$$\begin{cases} x_s = \dfrac{C_{min} + C_{max}}{2} = \dfrac{5 \cdot 10^{-3} + 0{,}5}{2} \cong 0{,}25mm \ \left(C_{min} \cong a^+\right) \\ \omega_N = 2\pi f = 2\pi \cdot 50 = 314 \dfrac{1}{s} \end{cases}$$

rezultă: $v = 0{,}25 \cdot \dfrac{314}{10} = 7{,}85 mm/s$;

- Debitul de comandă:

$$Q = v \cdot \frac{\pi D^2}{4} = 0{,}785 \cdot \frac{\pi \cdot 2^2}{4} = 2{,}46 \frac{cm^3}{s} \rightarrow 148 \cdot 10^{-3} \frac{dm^3}{\min};$$

- Presiunea de referință $p_r = 70\ bar$;
- Puterea hidraulică:

$$N_H = \frac{p_r \cdot Q}{612} = \frac{70 \cdot 148 \cdot 10^{-3}}{612} \rightarrow 16W;$$

- Coeficientul de amplificare al preamplificatorului:

$$k = \frac{N_H}{N_E} = \frac{16}{0{,}6} = 26;$$

În general coeficientul de amplificare sistemului cu ajutaj mobil se exprimă prin:

$$K = \frac{p_r Q}{u \cdot i} = \frac{p_r (A_s \cdot v)}{ui} = \frac{p_r A_s \left(x_s \frac{\omega_N}{10}\right)}{ui} = \frac{2\pi p_r x_s f}{10u \cdot i}$$

$$K = \frac{2\pi x_s f}{10u} \cdot \frac{p_r}{i}; \quad C = \frac{2\pi x_s f}{10u} \cong ct$$

$$K = C \frac{p}{i}$$

Bibliografie:

1. Catană I., Marin Al. - "Sinteza sistemelor de comandă a convertoarelor electrohidraulice cu reacții funcționale", Congresul Internațional de Cibernetică și Sistemică, București, 26- 31 August 1996;
2. Dupont E.P. - "Friction Modelling in Dynamic Robot Simulation", Proceedings of the 1990 IEEE International Conference on Robotics and Automation, Cincinnati, Ohio,1990;
3. Marin V., Marin Al. - "Sisteme hidraulice automate", Ed. Tehnică, 1988;
4. Vasiliu N., Drumea P., Vasiliu D., Marin Al. - "Cercetări teoretice și experimentale asupra dinamicii amplificatoarelor electrohidraulice proporționale", Conferința Națională de Energetică, București, 1988;
5. Mircea Comes, Andrei Drumea, Adrian Mirea, Gabriela Matache - „Intelligent servohydraulic device for the control of the motion", ISSE 2001 , Călimănești Căciulata , România.
6. Rădulescu, G.,Drumea, P., Marin, Al., Matache, G., Calculul timpului de răspuns al sistemului hidraulic al regulatorului de turbină Tehnologii moderne, calitate, restructurare, Conferința Internațională de Comunicări ș tiințifice TMCR 2001, Chișinău
7. Studiul privind tipurile componentelor mecatronice realizat de INOE 2000 - IHP in cadrul lucrarii - Cercetări avansate în domeniul componentelor mecatronice de execuție în scopul ridicării performanțelor și diversificării sistemelor utilizabile în acționarea electrohidraulică.

THE LABORATORY MODEL STUDY OF A NUMBER OF HYBRID SOLUTIONS FOR VEHICLE TRACTION, AND ELECTRIC POWER SUPPLY

Prof. PhD. eng. Emilian LEFTER, lect. PhD. eng. Luminita-Mirela CONSTANTINESCU,
Conf. PhD. eng. Eugen DIACONESCU
University of Pitesti

Abstract.
The paper presents a stand with hybrid operation supplied by a hybrid electric source, made up of electric cell batteries and a fuel cell. The stand allows the study of the hybrid solutions having applications in the field of car manufacturing

1. Introduction

After nearly 170 years since its invention (in 1834), the electric vehicle, EV – overshadowed by the A Ford – seems to be heading towards a durable variant.

There were several, constant attempts at reconsidering the EV, at higher intensities when oil crises were about.

Thus, in 1976, after the initial shock, that of the 1973-1974 periods, an R-D programme was launched in the USA, meant to demonstrate the potential of the EV.

The battery has, over the years, represented an impediment to the process of gaining acceptance for the EV.

The *Toyota Prius*, launched in 1997, becomes the first commercial hybrid car, and an example to the truth there is always a way to solve a problem. That way obviously reflects a certain stage of evolution – in that case, the prospects opened, on the one hand, by power electronics, the magnetic materials and the technology of the motors, and, on the other hand, by the successes marked in the technology of the new electric batteries. The researches in the field of the electrochemical sources have been given new impetus by mobile phone technologies, and the production of portable electric tools. After the first successes in the field of the mobile phones, the danger of appears of the blocking cause by the crisis of cadmium – as the NiCad batteries represented the batteries specific to the initial stage of mobile phones. The immediate investment in R-D directly led to developing the Ni-MH variant and then, the lithium variants [1].

The way was thus opened, and the following step is to be taken, i.e. developing efficient, up-to-the-task power sources. In fact, this process is currently under way.

The hybrid electrical car variant is a convenient bridge to the purely electrical variant, an already accepted compromise, which provides:

? the car manufacturers, a respite to choose the technology suitable for an infrastructure capable of rapidly developing;

? the oil suppliers, a period of relative calm, determined by the still existent market, since the passage to the next car variant does not occur abruptly;

? a temperate attitude from the oil suppliers;

? a dynamic course of R-D in the domain of the sources of energy: the electric batteries and/or the hydrogen fuel cell;

? a way to render economic life more dynamic, and open new horizons.

In 2006, the American president Bush launched [2] the Advanced Energy Initiative (AEI) at the meeting of the states of the union, and in 2007 he reiterates his support for accelerating the research in the field of the electric batteries for hybrid electric vehicle (HEV), and plug electric hybrid vehicle (PHEV). The target proposed was the vehicle having autonomy of 40 miles when operating in the purely electrical system.

President Obama [3] continues to support that program, including, in February 2009, the additional sum of $787 billions as incentives for the new PHEVs. During his election campaign, he promised that, as a result of the above incentives, in 2015 there would be 1 million cars capable of traveling 150mpg, cars that would be made in America.

In [3] there is the presentation of a scenario from a 2007 study of the Pacific Northwest State Department Laboratory of Energy, where, if 84% of the car fleet were supposed to be PHEVs, and had a course of 33miles/days, the fuel consumption would be reduced by the equivalent of 52% of the oil imported, alongside with a decrease in gas emissions of circa 27%. The research in the field of power batteries is funded through substantial grants, having credit facilities.

Under the circumstances, the big car manufacturers announce several programmes of launching hybrid variants.

GM are to launch on the market, in 2010, the Chevy Volt, a PHEV with 40 miles autonomy in purely electrical operation.

Nissan are to launch, in 2010, a 100% electric EV, which they are going to sell by 2012, as well as a parallel hybrid. The electric car will have an engine produced by Nissan, and an 80kW inverter. The batteries used are Li-Ion stratified, placed under the floor. For the year 2012, they plan to produce a City Car, an LCV, and in the perspective, a Crossover [4]. In the same quoted material, Renault proposes to build, in 2011, the electric variant of Kangoo and an electric Sedan, and for the year 2012 – an urban EV.

Nissan Motor Co, Ltd, NEC Corporation, and its subsidiary NEC TOKIN Corporation have formed a joint-venture company: Automotive Energy Supply Corporation (AESC), which has been operational since 2008 [4].

Toyota has made, after the Prius variant, the second variant, New Prius, which has better performance. For instance, the electric engine has: the rotation – from 6,500rpm to 13,900rpm; power – from 50kW to 60kW; mass – from 109kg to 80kg, and, in perspective, they plan to produce a PHEV with a 12.4mile autonomy [5] by using the Li batteries.

Honda, through their hybrid variants Insight, can be considered an already recognized producer in the car variants with an engine assisted by an electric motor – in this particular case, a 10kW one.

Though staunch supporters of the combustion pile, as Jeff Siegel points out [6], Honda will also opt for the variants powered by batteries, orienting themselves towards the Ni-Li ones, which can take in 3.5 times more energy than the Li-Ion variant, and intends to manufacture cars variants having a 40-200 miles' autonomy.

And the examples can be continued.

One can safely state that the activity in this specific field is still incipient, so in 2020, the number of the electric cars registered will be insignificant, i.e. circa 3% [3] as Berger Roland, Strategy Consultants in Stuttgart, Germany, shows.

In order to make the prototypes of such cars, the study on laboratory models can prove useful, as many of the systems specific to those variants require laboratory testing. Along these lines, we have personally concerned ourselves with working out solutions of functional models of systems of hybrid operations and hybrid electrical sources, applicable to cars.

In the material below the presentation will be done of a number of preoccupations in this field pursued by researchers at the University of Pite° ti.

2. The conception of building the stand

A car can be assimilated to the model in Figure 1, where the traction engine E develops the angular speed Ω_E, and an M_E torque. In keeping with the ration of transmission i_i from the gearbox, the output value of the couple going out of the gearbox is M_i, and the angular speed Ω_i. In differential D there will be a final ratio i_f, and the wheel will have the torque M_R and the angular speed Ω_R.

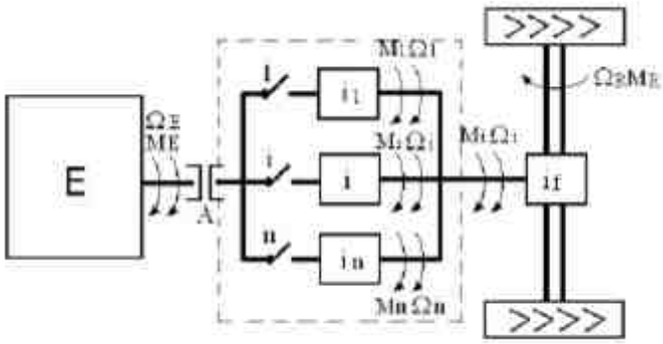

Fig.1

The mass of car m_a can be modeled by a flywheel having an inertial moment such as to determine the car's kinetic energy at speed v_a as equal to the kinetic energy of the flywheel at the angular speed Ω_V, imposed:

$$\frac{1}{2} J_V \Omega_V^2 = \frac{1}{2} m_a v_a^2 \qquad (1)$$

Fig.2

From relation (1) follows that the inertia moment of flywheel J_v depends on the driving angular speed of Ω_V:

$$J_V = m_a \left(\frac{v_a}{\Omega_V} \right)^2 \qquad (2)$$

If we take into account the relation between v_a, the angular speed of wheel Ω_R and the running radius of wheel r_R, we will obtain:

$$J_V = m_a \left(\frac{\Omega_R}{\Omega_V} r_R \right)^2 \qquad (3)$$

or

$$J_V = m_a \left(\frac{\Omega_E}{i \cdot \Omega_V} r_R \right)^2 \qquad (4)$$

where:

Ω_E – the angular speed of the engine;

i – the total transmission ratio from the engine to the wheel, in our case $i = i_t \cdot i_f$

To obtain as small a flywheel as possible, it is imperative that Ω_V should be as high as possible, yet is must not exceed the rotation rate of the engine.

Also, it would be useful that:

$$\frac{\Omega_E}{i_t} = \Omega_V \qquad (5)$$

In other words, we can do the modeling of the car through a flywheel driven by a rotation rate Ω_V having the rotation speed included between rotation rate Ω_R and Ω_E:

$$\Omega_R \le \Omega_V \le \Omega_E \qquad (6)$$

In calculating the initial value of the flywheel, we proceeded from $m_a = 300kg$ and $v_a = 15,55m/s$ imposing the condition that $\Omega_V = 50\pi\ rad/s$. Under these circumstances, the inertia moment $J = 2,94kgm^2$ resulted.

Once the flywheel achieved, the problem should be raised if we could do the modeling of another car with the data below:

$$m_{a1} = k_m \cdot m_a$$
$$v_{a1} = k_v \cdot v_a \quad (7)$$

where: k_m – the constant representing the ratio between mass m_{a1} of the new car and the mass of the modeled car m_a;

k_v – the constant representing the ratio of the speeds of the two cars: v_{a1}, the speed of the new car, v_a, the speed of the modeled car.

The flywheel will have to be driven with another angular speed Ω_{V1}, in order that the relation below should be observed:

$$m_{a1} \cdot v^2_{a1} = J \cdot \Omega^2_{V1} \quad (8)$$

It follows that:

$$\Omega_{V1} = \Omega_V \cdot k_V \cdot \sqrt{k_m} \quad (9)$$

Hence, if the engine is capable, another car can be modeled, observing relation (9), on condition the flywheel does not exceed the safety values of the angular speed allowed by the material of the flywheel. Basically, the highest weight in influencing the new angular speed is held by coefficient k_V.

Modeling the resistances to running, the resistance of the air, and the slope resistance, is done by means of a generator with separate excitation. Its power should be:

$$P_{gen} \geq f \cdot m_a \cdot g(\cos\alpha)v_a + 0,5\rho c_x A_f v_a^3 + m_a g(\sin\alpha)v_a \quad 10)$$

where:

f – the rolling resistance coefficient, 0,009;
g – gravitational acceleration, 9,81m/s^2;
α – the angle of longitudinal inclination of the road, $\alpha = 10°$;
v_a – the speed of the car, 15,55m/s;
ρ – the density of the air, 1,16kg/m^3;
c_x – aerodynamic drag coefficient, 0,335;
A_f – the area of the maximal cross section- front area- 1,8m^2.

With the data presented above, the following values are obtained for the three terms of the above relation: 405.616W; 1315.0324W; 7946.8578W.

For our model, we did not take into consideration the resistance to the slope, hence with the first two terms our generator should have the power:

$$P_{gen} \geq 405,616 + 1315,0324 = 1,72kW \quad (11)$$

We chose a 2kW generator. Taking into account its efficiency rate, its power can cover the job.

The ratio between the angular speeds of the flywheel and that of the wheel results from relation (3):

$$i_\Omega = \frac{\Omega_R}{\Omega_V} = \frac{1}{r_R}\sqrt{\frac{J_V}{m_a}} \quad (12)$$

For example, considering r_R=0.280m, there follows i_Ω=0.3535.

For any wheel pair of values (i) given, with the angular speed $\Omega_{R(i)}$ – torque, $M_{R(i)}$, the following $\Omega_{V(i)}$ angular speed values result for the

flywheel, respectively the torque $M_{V(i)}$ on the axis of the flywheel:

$$\Omega_{V(i)} = i_{\Omega}^{-1} \cdot \Omega_{R(i)}$$
$$M_{V(i)} = i \cdot M_{R(i)} \quad (13)$$

Values $\Omega_{R(i)}$, $M_{R(i)}$ can be obtained for various cycles through simulation with ADVISOR, tab.1.

Cycle	V_a (m/s)	$\Omega_{R(i)}$ (rad/sec)	$M_{R(i)}$ (Nm)	$\Omega_{V(i)}$ (rad/sec)	$M_{V(i)}$ (Nm)	W_V (J)	ΔW (J)	$P_{V(i)}$ (W)
UPIT20	8.94	31.7694	19.3298	89.87	6.833	1483.6	33.6	614.096
UPIT25	11.17	39.7376	24.4263	112.4118	8.63	2203.5	753.5	970.64
UPIT26	11.62	41.3332	25.5815	116.9256	9.04	2511.0	1061	1057.365
UPIT27	12.069	42.9296	26.782	121.441	9.46	2705	1255	1149.74
UPIT29	12.96	46.1245	29.3189	130.479	10.36	3124	1674	1352.31

Considering that the retrievable energy must be superior to the value 1,450J, since the rotation ratio under 10p rad/sec is too low, the retrievable energies will be given by the values of ÄW, given in the table.

It is apparent that, if the efficiency of the retrieval is low, there is hardly any justification for the whole of the retrieval installation.

Taking into account that we have mounted, on the shaft of the flywheel, a torque transducer, and the adjustment of the power for the shaft of the flywheel, $P_{V(i)}$, is done by regulating the excitation current of generator GE_1 that the latter drives, that excitation current will be regulated in such a way that the intended torque is obtained at the shaft of the flywheel. Through the checking of the torque, we have eliminated the necessity for the efficiency of the engine to be known.

Thus, the model of the car is that presented in Figure 3

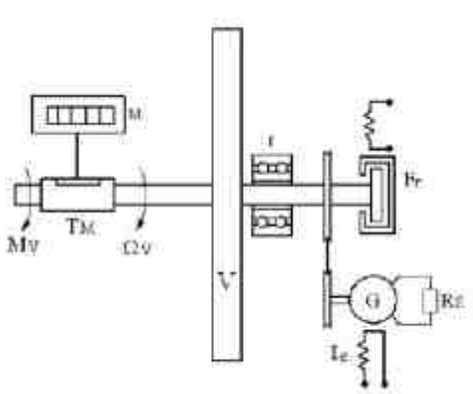

Fig.3

3. The hybrid driving system

The driving system is made up of two power sources: an electric engine/motor (M), and a engine/motor (E), with the possibility for each of the sources to operated separately, or jointly, in keeping with the principle expounded in Figure 4.

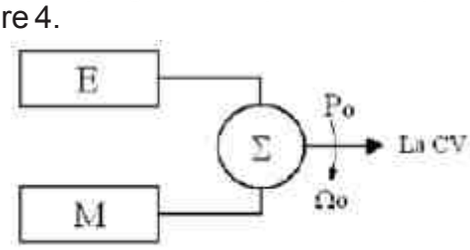

Fig. 4

The output power P_0 is given by relation:

$$P_0 = \frac{P_E + P_M}{2} \quad (14)$$

where: P_E – is the power produced by the engine;

P_M – is the power furnished by the electric motor.

The angular speed at the outlet of the driving system is:

$$\Omega_0 = \frac{\Omega_E + \Omega_M}{2} \qquad (15)$$

The power split device, projected and built, is a symmetrical differential mechanism.

The principle schema of the stand is presented in Figure 5.

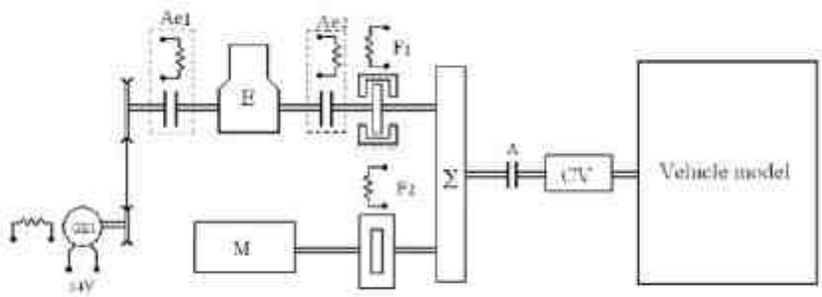

Fig. 5

The engine has an access at both ends of the outlet shaft. At one end, it is coupled, through an electromagnetic clutch, a GE_1 generator. The other end of the engine is coupled with the power split device-summator- Ó, through the clutch Ae_2 and the electromagnetic brake F_1.

The electric motor M is connected to the second entry of the differential mechanism Ó. A mechanic clutch A allows to system to be uncoupled from the flywheel. A gearbox CV allows changing the gears. The flywheel operates generator GE_2, whose excitation is programmable, as its aim is to model the car's advance resistances.

The system of electromagnetic clutches Ae_1, Ae_2 and the electromagnetic brakes allow making the combinations necessary for the building of the mass-production hybrid variant, the hybrid parallel one, the operation only with the engine, the operation only with the electric motor.

3.1 The hybrid CVT variant

The hybrid variant is in the preparatory stage equipped with a gearbox of continuous variable transmission (CVT), it will have the structure in Figure 6.

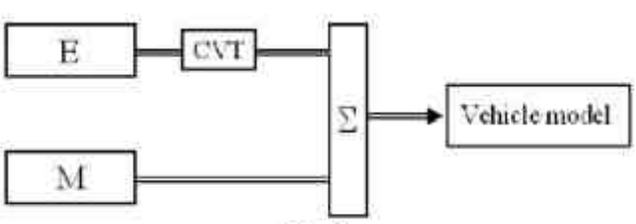

Fig. 6

Between the summator and the engine is inserted a CVT. The engine was replaced with a more powerful one. At the outlet from the summator there is a two-speed gearbox.

The new variant allows the complete automatization of the stand, as well as the carrying out of the standard tests.

3.2 Hybrid electric power supply

In the schema of electric power supply two basic sources are provided: a compound of batteries of accumulators, BA (16 batteries x 12V, 24Ah) made of lead and capsulated, mounted within a electric fan, a fuel cell, FC of 8 kW, with a voltage ranging between the limits 47-76V, having the work current within the limits 0-170A.

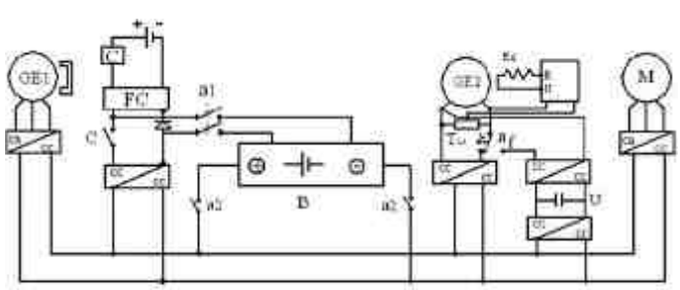

Fig. 7

Through switch a_1 a compound of 6 batteries of accumulators can be coupled in parallel with pile FC, and with a_2 is connected BA, across the main voltage terminals. One should not connect a_1 and a_2 at the same time.

The main load of those sources is represented by the driving motor stand M.

In the electric schema appear another two electric generators: GE_1 and GE_2. GE_1 can operate when the engine is in operation either when a series hybrid is simulated, or when the latter fails to work in the economical points, and its coupling is necessary.

GE_2 being driven by the same shaft the flywheel is on, plays two roles – that of a generator used to recover the braking energy, and that of a brake for the modeling of the advancing resistance of the car. A switch **a**, operated at the same time as the brake pedal, introduces the retrieval circuit that uses an ultracapacitor 110F, 48V.

The hybrid electric power supply system picture is presented in figure 8.

Fig. 8

4. Conclusions

The current research base at University of Pitesti allows conducting tests on both hybrid operation systems, and electric supply systems. The equipping of the stand with efficient, up-to-date elements allows conducting further studies focusing on the most appropriate structures of both the operation systems, and the electric power systems.

5. References

[1]. Lefter, Emilian, Alimentarea cu energie electrica a automobilelor, , Ed. Mediamira, 2006, Cluj-Napoca
[2]. www.eere.energy..gov
[3]. www.metroactive.com/metro/04.08.09/news-0914.html/
[4]. http://www.renault.com/en/Lists/ArchivesDocuments/Renault-EV-SG-Conf-may-15-2009.pdf
[5]. http://green.autoblog.com/2009/04/20/report-2010-prius-phev-to-feature-over-12-miles-ev-range/
[6]. www.greenchipstacks.com/articles/honda-electric-cars/539

SISTEM DE SENZORI RADIO PENTRU MONITORIZAREA TEMPERATURII SI UMIDITATII CU ACCES LA DISTANTA

RADIO SENSOR SYSTEM FOR MONITORING TEMPERATURE AND HUMIDITY WITH REMOTE ACCESS

Andrei DRUMEA, Bogdan LUPU, Iulian DUTU, Alexandru VASILE
Universitatea "Politehnica" Bucuresti, UPB-CETTI
Tel:+40 21 3169633, Email: andrei.drumea@cetti.ro
Institutul de Cercetari pentru Hidraulica si Pneumatica INOE2000-IHP,
Tel: +40213363991, Email: ihp@fluidas.ro

1. Introducere

Metodele clasice de monitorizare a parametrilor tehnologici impun cablarea senzorilor si traductoarelor la consola de monitorizare, solutia prezentand multe dezavantaje legate de mediul impropriu cablarii, complicatii constructive produse de includerea unor trasee de cablu in tuburi metalice sau scoaterea sistemului din clasa de precizie pentru care a fost proiectat din cauza utilizarii de cabluri lungi intre senzori sau traductoare si unitatile de procesare/monitorizare. In plus, monitorizarea prin cablu necesita costuri semnificative ale cablarii.

Alternativa este reprezentata de senzorii inteligenti care comunica prin radio si formeaza o retea; senzorii sunt realizati sub forma unor module de comunicatie identice atasate unor module de masurari specifice diferitilor parametri de monitorizat: debit, presiune, temperatura, deplasare, forta etc. Structura sistemului este ilustrata in figura 1.

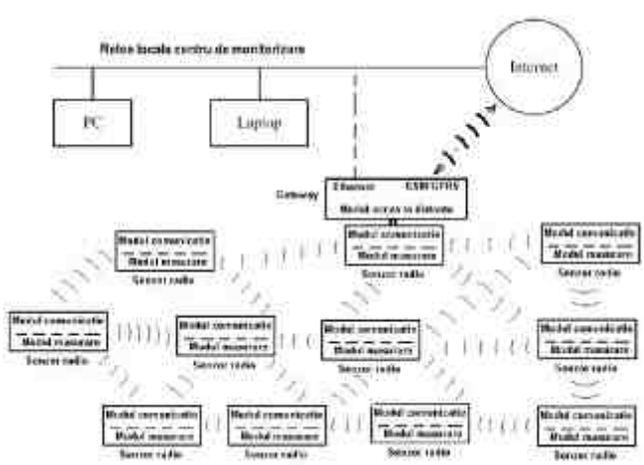

Fig.1 Structura retelei radio de monitorizare

Sistemul cuprinde urmatoarele elemente:

- senzori radio inteligenti – un astfel de sdispozitiv este practic un ansamblu modul inteligent de comunicatie radio plus un modul de masurare.Valoarea digitala a masuratorii este preluata de la modulul de masurare, evaluata conform anumitor criterii de plauzibilitate (se face o verificare de incadrare intre limitele de masurare prestabilite) si in final este comunicata in reteaua radio inteligenta.

Modulele de masurare sunt senzori de masurare a presiunii, temperaturii sau debitului, vitezei, acceleratiei fluidului(apei) sau a umiditatii, temperaturii si concentratiei aerului. In general sunt reprezentate de traductori simpli conectati la o unitate de conversie analog-digitala, sau instrumente de masura cu iesire digitala.

Modulele de comunicatie radio asigura comunicatia radio asigura transferul local de date si formeaza practic reteaua radio.

- modul concentrator de date cu interfata de comunicatie la distanta – asigura legatura retelei radio inteligente cu exteriorul, printr-o tehnologie de comunicatie ce permite utilizarea protocolului TCP/IP (standard pentru transmisia de date prin Internet) – telefonie GSM, retea cablata Ethernet etc.

- sistem de calcul aflat la distanta, care realizeaza monitorizarea, prelucrarea, interpretarea si stocarea datelor.

Datorita simplitatii in utilizare si testare accentul cade in prezenta lucrare pe senzorii de temperatura si umiditate, a caror testare si utilizare nu este conditionata de plasarea lor intr-o anumita instalatie.

2. Aspecte hardware ale sistemului de senzori radio

Un exemplu de senzor radio inteligent este cel de temperatura si umiditate. Modulul de masurare este prevazut cu afisaj cu cristale lichide (fig.2) pentru a asigura simultan si citire locala a parametrilor masurati si consum redus de energie. Elementul sensibil a fost plasat intr-o teaca metalica prevazuta la capat cu o sita metalica fina(fig.3)

Fig.2 Modul de masurare a temperaturii si umiditatii

Fig. 3 Elementul sensibil in teaca metalica

Pentru efectuarea verificãrilor specifice ale prototipului modului de mãsurare a temperaturii º i umiditãþii, acesta s-a montat împreunã cu ansamblul de mãsurare etalon (produs Rotronic, precizie 1% pentru umiditate si temperatura) într-o incintã de aproximativ 0,2 m³ avându-se în vedere simularea cât mai fidelă a condiþiilor reale de funcþionare. În tabelul 1 sunt date mãsurãtorile specifice modulului de mãsurare a temperaturii º i umiditãþii în raport cu etalonul.

Nr. crt.	Indicaţie temperatură, etalon [ºC]	Indicaţie modul de măsurare a temperaturii [ºC]	Indicaţie umiditate, etalon [% RH]	Indicaţie modul de măsurare a temperaturii [% RH]
1	20	20	65	64,9
2	25	25	64	64
3	30	30	62	62,02
4	35	35	60	60,08
5	40	40	59	59,1
6	45	45	56	56,3
7	50	50	54	54,8
8	55	55	53	53,2
9	60	60	41	41

Tab.1 Masurarea temperaturii si umiditatii cu senzorul propus si cu un etalon

In urma testelor efectuate se constata ca precizia senzorului testat este suficienta pentru aplicatia dorita – monitorizarea temepraturii si umiditatii aerului.

Modulul de comunicatie radio foloseste banda ISM 2.4GHz si protocolul IEEE 802.15.4 ce permite implementarea simpla a unei retele de senzori radio de consum redus. Antena este realizata direct pe cablajul imprimat (fig.4) si permite realizarea de legaturi radio sigure pe distante de ordinul zecilor de metri.

Comunicatia la distanta este asigurata de un modul GSM/GPRS plasat pe placa concentratorului de date (fig.5). Pentru simplitate se foloseste un protocol serial simplu si comunicatie GSM, dar microcontrolerul concentratorului permite implementarea protocolului TCP/IP necesar comunicatiei GPRS..

Fig.4 Modul comunicatie radio

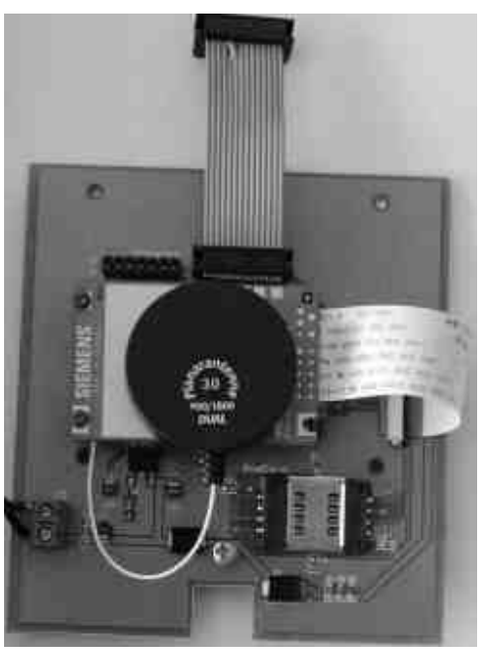

Fig.5 Concentrator de date cu modul GSM

3. Aspecte software ale sistemului de senzori radio

In paralel cu dezvoltarea si testarea senzorilor radio a fost dezvoltata o aplicatie Windows in mediul RAD Delphi destinata monitorizarii in timp real a retelei radio.

Senzorii prezenti în retea pot masura patru tipuri de parametri functionali. Intrucat destinatia initiala a sistemului a fost monitorizarea parametrilor din punctele de distributie a apei si energiei termice, aplicatia suporta patru tipuri de senzori:

- senzori de presiune a apei;
- senzori de temperatura, destinati masurarii temperaturii apei distribuite;
- senzori de debit, necesari pentru a contoriza debitul de apa livrata;
- senzori de umiditate si temperatura, utilizati pentru monitorizarea umiditatii relative si a temperaturii mediului in care este instalata reteaua de distributie.

Prin intermediul unui protocol de comunicatie implementat la nivelul bus-ului serial si utilizind tehnologia de comunicatie GSM se realizeaza transferul de date intre concentratorul de date din reteaua radio si sistemul de calcul aflat la distanta.

Aplicatia (fig. 6) este construita pe baza mai multor module:

modulul de monitorizare a conexiunilor din reteaua radio (zona de monitorizare a retelei si a conexiunilor dintre senzori);

modulul de inregistrare a datelor (zona de selectie a parametrilor inregistrati si tabelul de date);

modulul de vizualizare on-line a datelor prelevate de la senzori (zona de afisare a elementelor constitutive ale retelei si zona de vizualizare on-line).

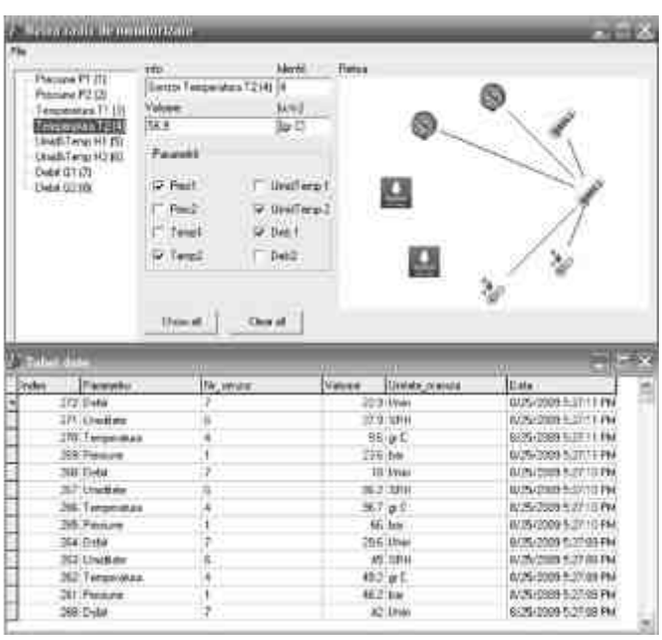

Fig.6 Fereastra principala a aplicatiei de monitorizare

Elementele constitutive ale aplicatiei sunt:

a.zona de afisare a elementelor constitutive ale retelei.

Zona contine elementele constitutive ale retelei monitorizate. Acestea sunt prezentate intr-o structura arborescenta, senzorii fiind afisati dupa numele lor in retea. Zona de afisare a elementelor constitutive ale retelei este corelata cu zona de vizualizare on-line si cu zona de monitorizare a conexiunilor din retea.

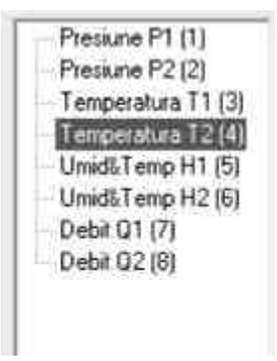

Fig. 7 Structura arborescenta a retelei

b.zona de vizualizare on-line

Zona este coreltata cu zona de afisare a elementelor constitutive ale retelei si contine informatii cu privire la senzorul selectat din structura arborescenta:

-info - numele de identificare a senzorului in retea;

-identif. - codul de identificare a senzorului in retea;

-valoare - ultima valoare receptionata de la senzor;

-[u.m.] - unitatea de mãsura pentru parametrul receptionat de la senzor

Fig. 8 Zona de monitorizare a senzorului selectat

c.zona de selectie a parametrilor inregistrati

In aceasta zona pot fi selectati parametrii ai caror valori mãsurate vor fi înregistrate in tabelul de date. Zona de selectie a parametrilor inregistrati este corelata cu tabelul de date.

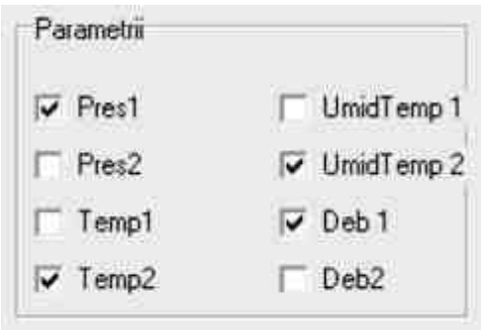

Fig. 9 Zona de selectie a parametrilor

d. zona de monitorizare a conexiunilor din retea

In aceastã zona poate fi vizualizata structura retelei si conexiunile dintre senzorul selectat in structura arborescenta si ceilalti senzori din retea. Senzorii sunt figurati prin intermediul unor pictograme sugestive. Zona este corelata cu zona de afisarere a elementelor constitutive ale retelei.

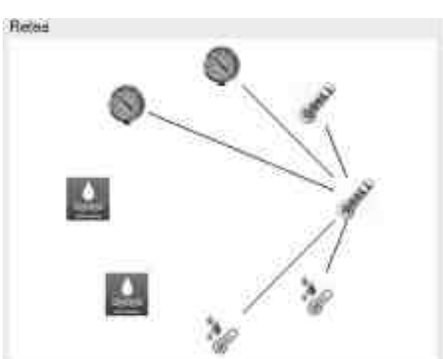

Fig. 10 Structura retelei si conexiunile dintre senzori

e. tabelul de date

Stocarea si prelucrarea datelor se face cu ajutorul unei baze de date ale carei inregistrari sunt afisate in fereastra „Tabel date” prezentata in figura urmatoare:

Tabel date

Index	Parametru	Nr_senzor	Valoare	Unitate_masura	Data
272	Debit	7	22.9	l/min	8/25/2009 5:27:11 PM
271	Umiditate	6	37.9	%RH	8/25/2009 5:27:11 PM
270	Temperatura	4	9.6	gr C	8/25/2009 5:27:11 PM
269	Presiune	1	23.6	bar	8/25/2009 5:27:11 PM
268	Debit	7	18	l/min	8/25/2009 5:27:10 PM
267	Umiditate	6	86.2	%RH	8/25/2009 5:27:10 PM
266	Temperatura	4	96.7	gr C	8/25/2009 5:27:10 PM
265	Presiune	1	66	bar	8/25/2009 5:27:10 PM
264	Debit	7	29.6	l/min	8/25/2009 5:27:09 PM
263	Umiditate	6	45	%RH	8/25/2009 5:27:09 PM
262	Temperatura	4	49.2	gr C	8/25/2009 5:27:09 PM
261	Presiune	1	46.2	bar	8/25/2009 5:27:09 PM
260	Debit	7	42	l/min	8/25/2009 5:27:08 PM

Fig. 11 Tabelul cu datele prelevate de la senzori

Inregistrãrile se fac pe baza datelor primite de la senzori si in corelatie cu parametrii selectati pentru inregistrare in zona de selectie a parametrilor inregistrati.

Ca organizare, baza de date principala contine urmatoarele campuri: Index (numarul de ordine al inregistrarii curente), Parametru (tipul parametrului inregistrat), Nr_senzor (identificatorul senzorului în cadrul retelei), Valoare (valoarea parametrului inregistrat), Unitate_masura si Data.

Aplicatia descrisa a fost testata cu succes impreuna cu senzorii de temperatura si umiditate prezentati anterior.

.

6. Concluzii

Utilizarea microcontrolerelor moderne asigura dimensiuni reduse si consum scazut de energie in aplicatiile de monitorizare si masurare.

Retelele actuale de senzori radio ofera performante similare solutiilor cablate dar la o flexibilate net superioara si un cost comparabil.

Completarea retelei de senzori radio cu optiunea de acces de la distanta dublata de aplicatii de monitorizare si prelucrare de date se poate realiza foarte usor cu ajutorul tehnologiilor de comunicatie GSM/GPRS si a bazelor de date SQL.

7. Bibliografie

[1] "Embedded control handbook – Vol. 1", Microchip Inc., 1997.

[2] Lutz Bierl, “Das grosse MSP430 Praxis Buch”, Franzis, 2004.

[3] Chris Nagy, “Embedded system design using the TI MSP430 series (Embedded Technology series)”, Newnes, 2003.

[4] A. Drumea, P. Svasta, “Universal Electronic Module for Industrial Control Based on System on Chip Device”, International Spring Seminar on Electronics Technology ISSE2007, May 2007, Cluj-Napoca, Romania.

OPTIMIZAREA CONSUMULUI DE ENERGIE A SISTEMULUI DE CONDUCERE AUTOMATĂ A PROCESELOR DE USCARE CONVECTIVĂ

Erol Murad (*), Tudor Chereches (**)
(*)Universitatea POLITEHNICA Bucureºti (**) Academia Tehnicã Militarã

Abstract:
To achieve convective dryers with small production capacity, movable in harvesting areas of the products to be dried is necessary to increase energy independence, reduce the energy impact and to manufacture at competitive prices. Consideration was paid to the typical structure of automatic control systems of convective dryers and components were chosen to obtain minimum energy consumption. There were chosen electronic components as well as unconventional pneumatic components, the selection criterion being minimizing energy consumption.

1. Aspecte generăle

Uscarea reprezintã un procedeu eficient economic ºi ecologic pentru pãstrarea principalelor produse agricole vegetale, fructe ºi legume. Cu un proces de uscare optim se obþin produse cu potenþial nutritiv ridicat, uniform uscate ºi cu consumuri energetice specifice reduse.

Conducerea automatã a procesului de uscare este necesarã pentru a se obþine regimul de lucru optim. La uscãtoarele cu capacitate de producþie micã, sub 10 m^2 suprafaþã de casete, preþul sistemului de conducere automatã poate dubla costul instalaþiei ºi deci determinã reducerea funcþiilor de conducere automatã cu repercursiuni asupra calitãþii produselor finale. Aceste uscãtoare pot fi deplasate uºor la locul de recoltare a produselor ce se vor usca ºi ca urmare este necesar un nivel mare de independenþa energeticã, precum ºi o fiabilitate ridicatã.

Instalaþiile de uscare consumã multã putere termicã ºi circa 8% energie electricã pentru ventilator ºi automatizare. Pentru independenþã energeticã puterea termicã se poate obþine local din biomasã, aspectul critic fiind consumul de energie electricã.

In aceastã lucrare se analizeazã variantele de utilizare a diferitelor tipuri de traductoare ºi elemente de execuþie, electronice ºi pneumatice, ca modalitate de reducere a consumului de energie electricã în sistemul de conducere automatã.

S-au utilizat conceptele de bazã ale automatizãrii cu cost redus, a minimalizãrii consumului de energie ºi nu în ultimul rând al eficienþei economice.

2. Mărimile ce trebuie măsurăte pentru conducereă ăutomătă ă proceselor de uscăre

Pentru controlul automat optimal al procesului de uscare trebuie sã se mãsoare în timp real urmãtoarele mãrimi:

-temperatura T_{ai} a agentului de uscare în domeniul 20..70 ºC,

-umiditatea relativã $_{ai}$ a agentului de uscare în domeniul 30..80 %,

-cantitatea de apã $M_{apă}$ eliminatã prin uscare

In figura 1 este prezentata schema bloc a unei instalatii de uscare convectiva, care utilizeaza ca agent termic apa calda, în care sunt puse în evidenta traductoarele si elementele de executie necesare.

Pentru reglarea automatã a temperaturii în procesul de uscare elementul de execuþie este robinetul de reglare RR1 iar mãrimea de execuþie este puterea termicã introdusã în proces prin debitul de apã caldã.

Pentru reglarea umiditãþii relative a agentului de uscare elementul de execuþie este o baterie de clapete, acþionatate de elementul de acþionare EA1, cu care se modificã proporþia dintre debitul de agent reciculat ºi cel de aer exterior.

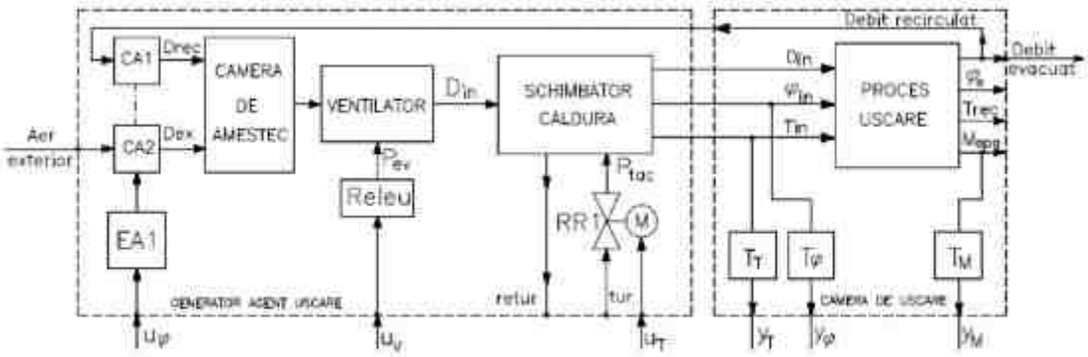

Fig. 1 Schema bloc a unui uscător convectiv încălzit cu apă caldă

Obiectiv urmărit constă în reducerea consumului energetic al sistemului de conducere automată. Ca urmare se vor analiza soluţii şi principii constructive care se caracterizează prin consumuri foarte mici de energie electrică şi de aer comprimat.

Un aspect esenţial luat în considerare constă în faptul că procesele de uscare sunt procese termice lente cu viteze foarte mici de variaţie a mărimilor caracteristice.

3. Alegereă trăductoărelor

In prezent conducerea automată a proceselor se face cu PLC-uri de ultimă generaţie care au un consum foarte mic de energie electrică şi au posibilităţi foarte largi de cuplare la diferite tipuri de traductoare şi elemente de execuţie.

In conducerea proceselor de uscare mărimile determinante sunt temperatura şi umiditatea agentului de uscare. Uzual se măsoară umiditatea relativă $_{in}$ a agentului de uscare precum şi temperatura acestuia, iar în PLC se calculează valoarea umidităţii absolute X_a care intră în modelul de conducere a procesului. Traductoarele de acest tip, cu care se măsoară simultan temperatura şi umiditatea relativă sunt alimentate la 24 Vcc cu un consum de minim 40mA, ceea ce duce la un consum de 1W. Un aspect des întâlnit este sensibilitatea senzorului capacitiv de umiditate la compuşii chimici organici care sunt preluaţi de agentul de uscare şi recirculaţi. Acest aspect conduce la utilizarea de filtre speciale, scumpe, cu durată de utilizare redusă, precum şi la creşterea semnificativă a timpului de răspuns.

Recentele dezvoltări din domeniul microelectronicii au dus la realizarea de senzori de umiditate de tip rezistiv cu o bună precizie, cu insensibilitate ridicată la compuşi chimici organici şi care au gabarite şi consumuri de energie foarte mici.

Un exemplu edificator îl reprezintă traductorul de temperatură şi umiditate absolută, tip HT-961 produs de Ohmic Instruments, USA.[ ] Acest tip de traductor măsoară temperatura în domeniul -20..+70 ºC, umiditatea absolută în domeniul 2..130g/m^3; are o ieşire pentru temperatură y_T[1, 5] Vcc şi o ieşire pentru umiditatea absolută y [1, 5] Vcc cu un consum de numai 16 mW. Un alt aspect semnificativ este că are un gabarit foarte redus: diametrul de 12 mm şi lungimea de 80 mm, ceea ce îl face uşor de poziţionat în spaţii mai restrânse.

Pentru optimizarea procesului de uscare este necesara masurarea continua a masei de apa extrasa în timpul procesului de uscare.

Pentru reducerea costurilor de producţie a uscătorului măsurarea se face pentru un eşantion reprezentat de una sau mai multe casete de uscare suspendate pe un traductor de forţă. Pentru simplificarea constructivă traductorul trebuie dispus în camera de uscare la temeperaturi şi umidităţi ridicate. In lucrările [] şi [] s-au analizat aceste aspecte şi s-a dezvoltat un traductor de forţă pneumatic, neconvenţional, care este adaptat condiţiilor de funcţionare din uscătoarele convective şi necesită numai 63mW putere electrică şi 5mW putere pneumatică.

In figura 2 este prezentată schema bloc a acestui tip de traductor. El este format dintr-o celulă de sarcină pneumatică, un bloc de conducere alimentat cu energie electrică şi pneumatică şi un convertor presiune-tensiune cu ieşirea y_F[1, 3] Vcc

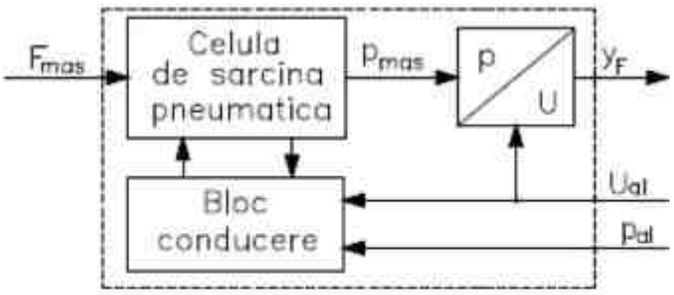

Fig. 2 Schema bloc traductor de forță pneumatic

In figura 3 este prezentatã schema funcționalã a dispozitivului de mãsurare a masei de apã extrase în timpul procesului de uscare în care s-a utilizat traductorul pneumatic de forțã din figura 2. Traductorul are o ieșire pentru masa mãsuratã y_M[1, 3] Vcc.

Rezultã cã varianta analizatã necesitã pentru funcționarea traductoarelor o putere electricã medie de 80 mW și o putere medie pneumaticã de 5 mW, ceea ce constituie mai puțin de 100 mW în total.

Considerând cã o șarja medie de uscare are o duratã de 6 ore și se pot realiza maxim 3 șarje pe zi rezultã un necesar de energie electricã de numai 1,8 Wh/zi, sau o energie electricã de 6,5 kJ. Aceastã energie se poate stoca într-o baterie de miniacumulatoare Li-Cd care se pot reîncãrca în timpul zilei cu un panou fotovoltaic.

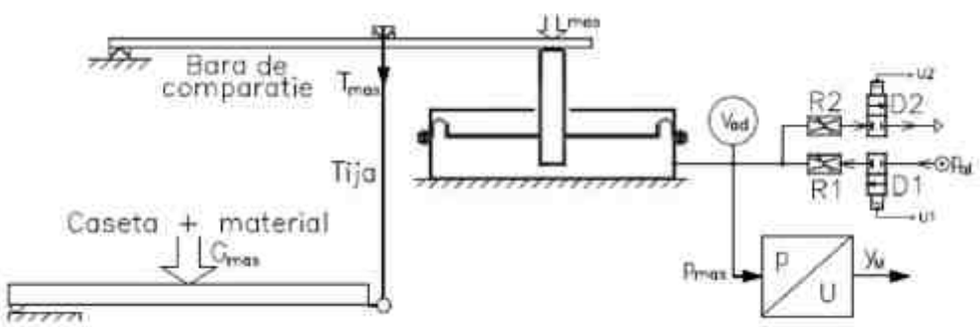

Fig. 3 Schema funcționalã a dispozitivului de mãsurare a masei de apã extrasã

4. Alegerea elementelor de execuție

Pentru reducerea consumului de energie, a gabaritelor și a prețului se pot utiliza elemente de execuție cu acționare pneumaticã. S-a avut în vedere specificul proceselor de uscare în care coeficientul de recirculare a agentului de uscare scade continuu, precum și faptul cã puterea termicã necesarã scade continuu în timpul unei șarje de uscare. Aceste aspecte permit realizarea de mari simplificãri constructive și funcționale.

In figura 4 este prezentat elementul de acționare EA1 pentru clapetele camerei de amestec.

Elementul pneumatic de acționare cu membranã, cu simplã acțiune, EPAM acționeazã clapetele CA1 și CA2 pentru agent recirculat și pentru aer exterior.

Camera sub presiune este legatã prin rezistența R3 la douã distribuitoare D3 și D4 care primesc semnalele de comandã u3 și u4 care compun mãrimea de comanda u elaboratã de algoritmul tripozițional de conducere a buclei de reglare a umiditãții absolute a agentului de uscare.

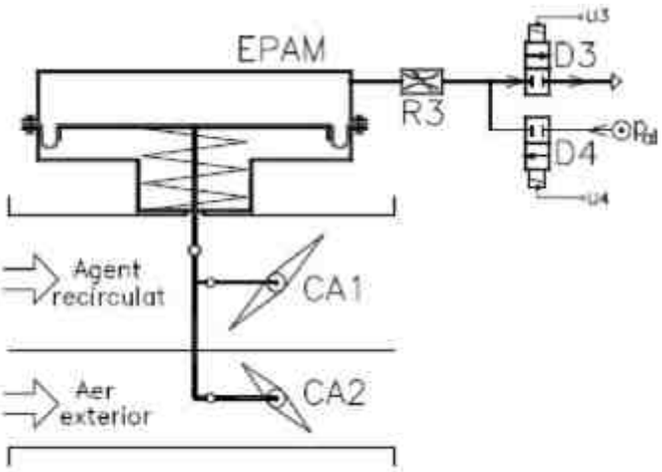

Fig.4 Acţionare clapete cameră de amestec

La începerea unui ºarje debitul de aer exterior are valoarea cea mai mare pentru a compensa debitul evacuat cu umiditatea extrasă. In acel moment se introduce aer comprimat în EPAM prin D4, se deschide CA2 ºi se închide CA1. In timpul derulării procesului de uscare scade debitul de apa extrasă ºi se micºorează ºi debitul de aer exterior, ceea ce duce la evacuari succesive de cantităţi de aer din EPAM în exterior prin D3. Rezultă că într-o ºarjă de uscare se consumă aer comprimat doar pentru umplerea iniţială, ulterior aerul din camera sub presiune fiind evacuat treptat în atmosferă. Ca urmare rezultă că se consumă energie doar pentru comanda distribuitorului D3.

Pentru a se reduce durata totală de acţionare a distribuitoarelor se reglează rezistenţa R3 pentru ca un ciclul de evacuare să fie de maxim 2..3 s.

Utilizând un produs realizat de SMC, electrodistribuitorul tip SJY312MT5M-M3 care consumă numai 0,1W, rezultă pentru o comandă un consum maxim de 0,3 J. Pentru un număr de circa 100 comenzi pe durata unei ºarje rezultă un consum de 30 J sau 8,4 10^{-3} Wh pe ºarjă, sau 2Wh/zi. Pentru reglarea puteri termice necesare procesului de uscare se variază debitul de apă caldă care intră în schimbătorul de căldură. Pentru variaţia debitului de apă caldă se va utiliza un robinet de reglare cu tub flexibil ºi cu acţionare pneumatică, a cărui schemă funcţională este prezentată în figura 5.

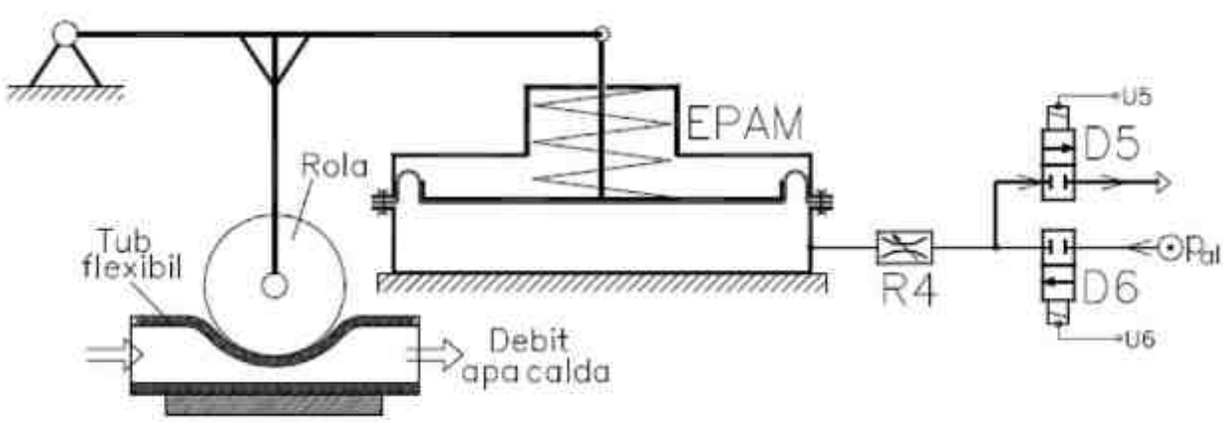

Fig. 5 Robinet de reglare cu acţionare penumatică

Tubul flexibil este presat de o rolã cu care se variazã secþiunea de trecere a apei calde. Rola este presatã pe tub printr-un sistem de pârghii cuplat la elementul pneumatic de acþionare cu membranã EPAM în care este montat arcul de revenire.

La începerea sarjei de uscare necesarul de putere termica este maxim si se comanda ridicarea rolei prin introducerea de aer comprimat în EPAM, ceea ce duce la comprimarea arcului de revenire si marirea sectiunii de trecere a apei calde.

In desfãºurarea procesului de uscare necesarul de putere termicã scade continuu, algoritmul PID de reglare al temepraturii dã comenzi u5 pentru evacuarea în exterior a unei mase de aer astfel ca rola sã apese mai mult pe tub reducând debitul de apã caldã.

Ca ºi la elementul de execuþie pentru reglarea umiditãþii se constatã un consum foarte mic de energie electricã ºi nesemnificativ de energie pneumaticã.

Energia pneumaticã, aer comprimat la maxim 100 kPa, se poate stoca într-un rezervor flexibil de maxim 5 dm^3 care se încarcã cu un mini compresor cu membranã alimentat din bateria de miniacumulatoare. Pentru un consum redus de energie ºi o fiabilitate ridicatã se pot utiliza compresoarele de la tensiometrele medicale portabile.

4. Alimentăreă cu energie

Pentru alimentarea cu energie se poate utiliza un panou fotovoltaic mobil, de dimensiuni miciºi cu ecran de protecþie din sticlã

Consumul de energie electricã se poate estima prim însumarea consumurilor de la traductoare, elemente de execuþie compresor ºi PLC.

In calcul s-au luat în considerare PLC-uri de ultima generaþie cu consumuri foarte reduse. Un exemplu sunt PLC-urile tip ALPHA2 produse de Mitshubisi în 2008. Pentru uscãtorul analizat este necesar tipul AL2-14MR-D alimentat în 24 Vcc ºi care consumã în medie 1 W. Traductorul de temperaturã ºi umiditate realtivã consumã 16 mW. Traductorul de masã consumã 63 mW, iar cele douã elemente de execuþie 160 mW.

Compresorul, cu un randament de 40%, trebuie sã producã o putere pneumaticã de maxim 20 mW, consumând o putere electricã de 50 mW.

Insumând puterile necesare rezultã cã este necesarã o putere electricã de circa 3 W. Dacã se ia în considerare un coeficient de incertitudine de 0,33 rezultã un necesar de 4 W putere electricã maximã. Pentru a asigura aceastã putere electricã 20 ore de funcþionare pe zi este necesarã energie electricã de 80Wh.

Randamentul de utilizare a miniacumulatoarelor este de minim 70% ceea ce face necesar acumularea zilnicã a unei energii de 115 Wh produsã de un panou fotovoltaic.

Bateria de miniacumulatoare trebuie asigure ºi funcþionarea într-o zi noroasã ºi ca urmare trebuie sã aibã o capacitate de stocare de minim 10 Ah la 12 Vcc

Pentru perioada de uscare, lunile mai-octombrie, se poate conta pe o iluminare medie de 13 W. Se pot utiliza panouri solare care debitează la o iluminare medie o putere de 20 W la 12 Vcc.

Concluzii

Pentru realizarea de uscãtoare convective cu consum minim de energie electricã în vederea obþinerii unei independenþe enrgetice ridicate, s-au analizat variante de utilizare a traductoarelor ºi a elementelor de execuþie, de tip electronic ºi pneumatice neconvenþionale cu consumuri foarte reduse de energie pentru realizarea sistemului de conducere automatã.

Este de remarcat cã utilizarea traductorului de masã ºi a elementelor de execuþie de tip pneumatic neconvenþional, precum ºi a PLC-urilor recente, necesitã o putere electricã de doar 4W. Acestã putere este asiguratã de o baterie de miniacumulatoare cu capacitatea de 10Ah la 12 Vcc.

Se constatã ca pentru realizarea unui consum minim de energie este necesarã utilizarea tuturor variantelor de energie, electricã ºi pneumaticã, utilizând elemente cât mai bine adaptate la specificul instalaþiei automatizate

References:

[1]. Courtois F., **Automătic control of drying processes,** 1996, Automatic Control of Drying Processes, in Computerized Control Systems, Mittal ed., pp 295-316.
[2]. Murad E., Bădileanu M., Licã C., Bălăcianu G., Optimizarea instalaţiilor de uscare convectivã a legumelor º i fructelor alimentate cu energie termicã produsã din biomasã agricolã; INMATECH-2007, Bucureº ti, mai 2007
[3]. Murad E., Măsurarea parametrilor procesului de uscare a produselor ceramice cu traductoare pneumatice neconvenţionale, HERVEX 2007, pp 160-163
[4]. Murad E., Cercheº T., Traductoare pneumatice neconvenţionale cu consum redus de energie pentru măsurarea forţelor din instalaţii agricole º i în industria alimentarã, HERVEX 2008, Cãlimãneº ti 15-17 noiembrie 2008
[5]. Murad E., Haraga G., Bulearcã M., Bădileanu M., Convection dryers under cogeneration, Conferinţa Internaţionalã ENERGIE - MEDIU CIEM 2009, UPB, Bucureº ti 12-14 noiembrie 2009
[6]. Murad E., Predescu C., Rizoiu G., Sima C., Instalaţii de uscare mobile º i ecologice destinate zonelor montane, HERVEX 2009, Cãlimãneº ti 18-20 18-20 noiembrie 2009
[7]. Murad E., Maican E., Marin A., Dumitrescu C., Dinamica traductoarelor pneumatice cu consum redus de energie pentru măsurarea forţelor în procese lente, HERVEX 2009, Cãlimãneº ti 18-20 noiembrie 2009
[8]. Radcenco V., Alexandrescu N., Ionescu E., Calculul º i proiectarea elemenelor º i schemelor pneumatice, Editura Tehnicã, Bucureº ti, 1985
[9]. Mujumdar A. (editor), Handbook of Industrial Drying, CRC Press, NewYork, 2007
[10]. *** Catalog Ohmic Instruments Co. USA, 2009
[11]. *** Catalog SMC, 2009
[12]. *** Catalog Motorola 2008

MECHATRONIC EQUIPMENTS FOR RESEARCH OF KINETIC ENERGY RECOVERY PROCESSES IN AUTOMOTIVE BRAKING

ECHIPAMENT MECATRONIC PENTRU CERCETAREA PROCESULUI DE RECUPERARE A ENERGIEI CINETICE LA FRANAREA AUTOVEHICULELOR

PhD. eng. Corneliu CRISTESCU, PhD. eng..Petrin DRUMEA ,
Hydraulic and Pneumatics Research Institute- INOE 2000-IHP Buchaest, ROMANIA,
cristescu.ihp@fluidas.ro, ihp@fluidas.ro

Abstract:

The paper presents a hydraulic system used to recovering of the kinetic energys of the motor vehicle, in the braking phase. This saved energy is used in the acceleration phases, in order to increasing energy efficiency of the motor vehicles propulsion systems. All the system is conceived like a mechatronics system, for the medium and heavy motor vehicles and contains a hydro-mechanic subsystem, an electronics subsystem and an informatics subsystem. The implementation of the recovering system on one motor vehicle transforms it in a hybrid vehicle and leads to decreasing of the fuel consumption and to reduce the gas emissions.

Keywords: hydraulic system, *hybrid systems, energy recovering, road vehicles.*

1. Introduction

The development of road transport has a strong impact on the environment, global warming of the planet and the resources of fossil fuels.

In order to reduce these effects, manufacturers of motor vehicles considers that a radical solution to improve the situation is changing the propulsion of vehicles by promoting hybrid propulsion systems, considered as a future solution for a substantial reduction in fuel consumption and pollutant.

Typical, the kinetic energy of the motor vehicle, accumulated in the accelerating phase, in the braking phase is converted in the thermal energy which is, normally and irremediable, wasted in atmosphere [1]. To reduce the fuel consumption and to limit the emission of motor vehicle, the manufacturers have developed less polluting vehicles and reduced fuel consumption. In this category, are, also, vehicles with hybrid propulsion systems The propulsion systems which have in addition to a conventional internal combustion engine, at least one capable of providing torque to the wheels car and recover some of the kinetic energy, are known as *hybrid Regenerative Systems*.

The main objectives *of the hybrid systems are the* ***recovering*** *kinetic energy* ***of the road motor vehicles*** *and reducing the fuel consumption* and, also, *the reducing of the environment pollution.*

In this respect, the Hydraulics and pneumatics Research Institute-INOE 2000-IHP, together with its partners: the *Politechnica* University from Bucharest, INCDMF, INMA and ROMFLUID, were involved in the development of a research project, which aims to recover kinetic energy, during braking road vehicles, by developing a hybrid thermal-hydraulic system, and use it in the starting phases of motor vehicles. The project was conducted under the *Excellence Research Program* and funded by *National Authority for Scientific Research*..

Based one a vast documentation on the INTERNET, regarding the technical realization in the recovering energy field, where studied a lot of technical solutions which allow the designing, manufacturing and testing one functional model and where made the necessary measuring in order to demonstrate the functionality, efficacy and efficiency of the functional model .

2. The presentation of the hydraulic system for energy recovering

The hydraulic system for energy recovering represents the main physical product, resulting from the finalization of the maintained research project. The aim of the hydraulic system is the recovering the kinetic energy, in the braking phase of the medium and heavy motor vehicle. The technical problem, which is solved by the hydraulic recovery system, is the capturing and storing of the lost energy in the braking phases at the medium and heavy motor vehicles.

The method consists in using one mechanic and hydraulic module, which is able to capture and to convert the kinetic energy into the hydrostatic energy and, also, storage and reuse it for acceleration and starting of the vehicles, figure1.

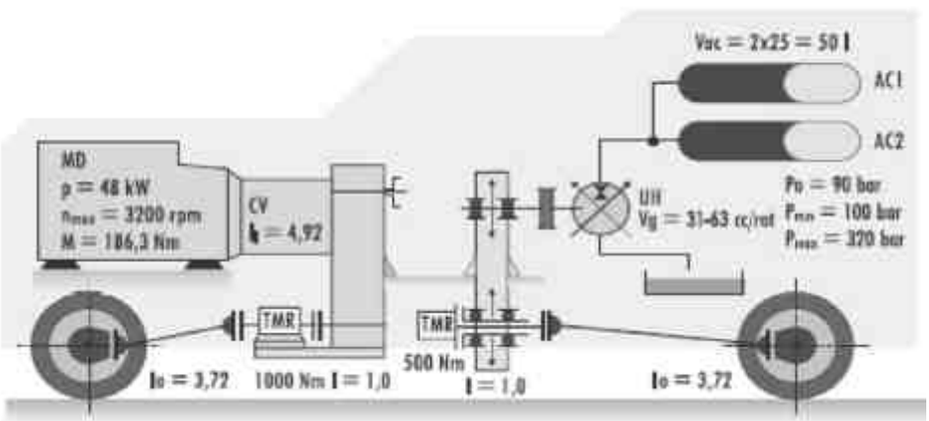

Fig. 1 The conceptual model of the kinetic energy recovery system

In the following, is presented a Romanian technical solution for an energy recovery system, which is based on a hybrid system compound by a mechano-hydraulic module and, also, an existing system with thermo-engine and mechanical transmission, all conceived as a mechatronics system..

2.1 The conceptual model of the energy recovery system

The hydraulic recovering system of the kinetic energy was designed to be implemented on one Romanian automotive, well-known as ARO 243 type, which has a 4x4 driving system. In the conceptual model of the kinetic energy recovering system, figure 1, it distinguishes the Diesel engine MD, the gearbox CV and the gear transmission to the front wheels, through one torque transducer (TMR) and one Cardan axle. It can see the mechanical transmission to the hydraulic machine/unity UH, the tank for low pressure LT and the storing system for height pressure, which is compound of the two hydraulic and pneumatic accumulators AC1 and AC2.

The hydraulic power is transmitted, to the breech wheels, through the one torque and rotation transducer (TMR) and one Cardan axle. The hydraulic machine can be connected, in parallel, anywhere in the driveline, but, generally, is mounted between gearbox and differential mechanism.

The main part of the recovery system is the hydraulic machine with variable geometrical volume [2], [3], that can work both as a pump, in the braking process, and, also, as a hydraulic motor, in the starting process of the motor vehicle. The hydraulic machine is acted through one gear box transmition, being assisted by an electro-hydraulic system, which is interfaced with the subsystems for braking and acceleration of the vehicle, all controlled by a processor.

The operation of the recovery system has needed a lot of sensors and transducers, for monitoring and controlling the evolution of parameters [4].

2.2 The block diagram of the mechatronic recovery system

The kinetic energy recovering system was developed in a mechatronics conception, which is considerate as being the unique capable technology to manage, in very short time, the transient working regimes, in the braking and accelerating phases, in order to integrate the interaction of the some hydro-pneumatic components,into the mechatronic ensembles, figure 2.

The energy recovery system, figure 2, through the three basic mechatronic subsystems, assure the control and monitoring for mechanic and hydraulic parameters, allows data acquisition from the transducers for moment/couple, temperature, flow and pressure.

Data from the transducers are transmitted within the serial communication line [4]. The electronic module is equipped with a console which allows visualization and modification of the functional parameters.

The mechatronic system contains: *mechanical and hydraulic* subsystem, *electronic subsystem* for command and control and, also, the *informatic subsystem* for data management, which allows the measurement and control for all system parameters. The interface between the first two subsystems is the subsystem of sensors and transducers, which provide information on the evolution of the main parameters of the system.

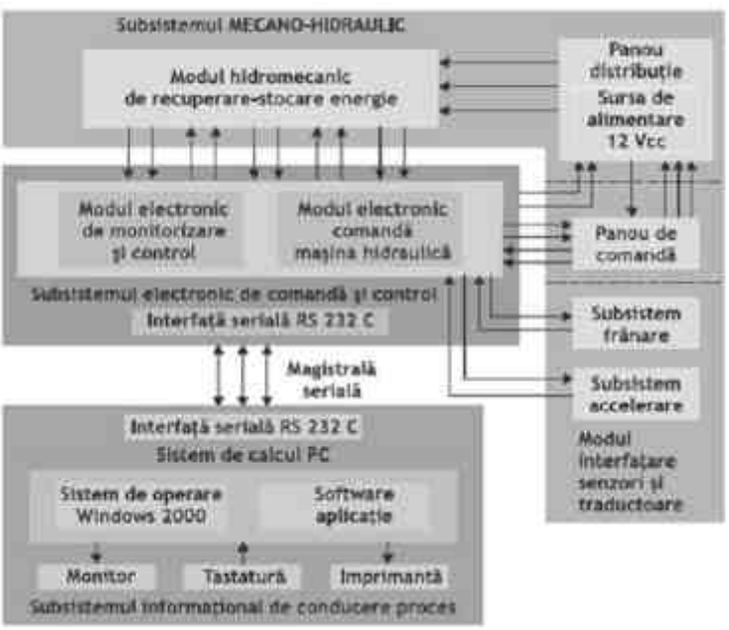

Fig. 2 The block diagram of the mechatronic system for recovering kinetic energy

This component defines the mechatronics basis for the system design and development. The mechatronic system is working on the basis of dedicated software, which allows monitoring and recording of the evolution of output sizes and the control parameters of the system. The electronic module calculates the hydraulic power at the hydraulic machine, as a product between pressure and flow, and transfers it through a serial communication line to the system. The system is equipped with a Lap Top or PC computer, control the input functional parameters, and the visualization of the measured output parameters.

The main command output size is swivel angle of the block of pistons of the hydraulic machine, which determines the variation of the flow and, on the other hand, the running regime like pump or motor, in function of the braking or accelerating regime.

2.3 Some theoretical results obtained by modeling and simulation

In order to optimise the main constructive and functional features, the main components of the system were selected from the theoretical results obtained from the mathematical modelling and the computer

simulation work, [5]. It was necessary to know the dynamic behaviour of the experimental hybrid motor vehicle, in braking phase and where elaborated a mathematical modelling and a simulation program [6]. After the simulation, where obtained a lot of variation diagrams for the interesting parameters, presented in the next figures. For example, in the figure 3 is presented the kinetic energy variation during the braking process and in the figure 4 the vehicle braking velocity variation.

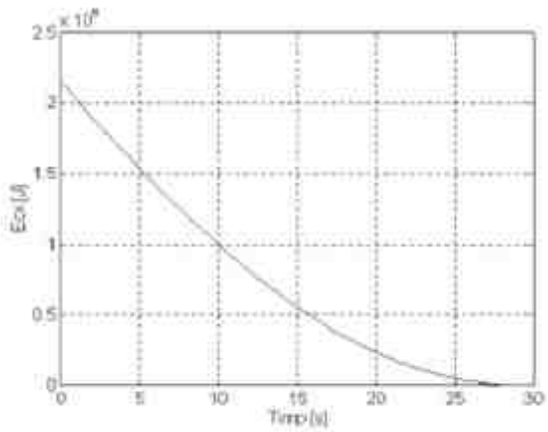

Fig. 3 The kinetic energy variation

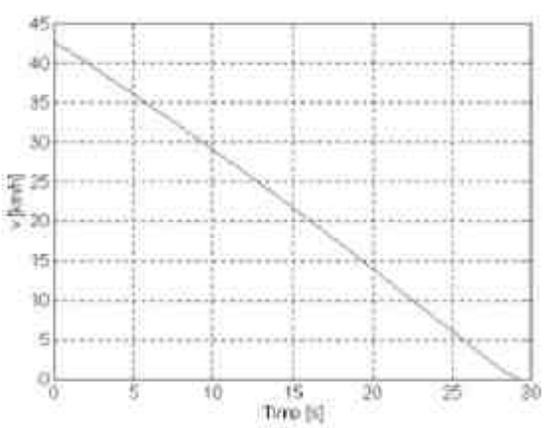

Fig. 4. The braking velocity variation

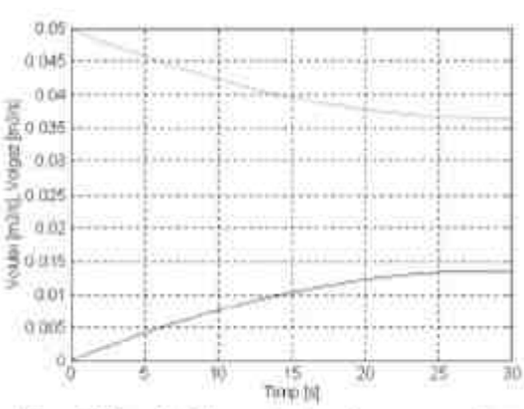

Fig. 5 The fluids variation in accumulators

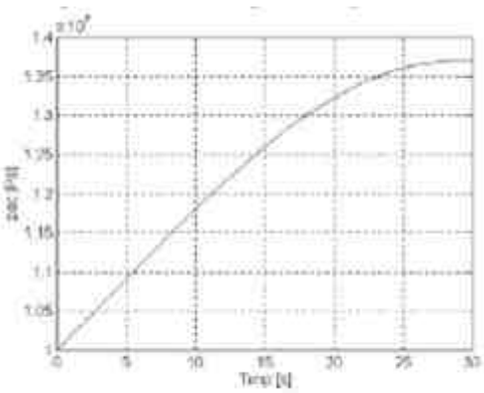

Fig. 6 The braking pressure variation

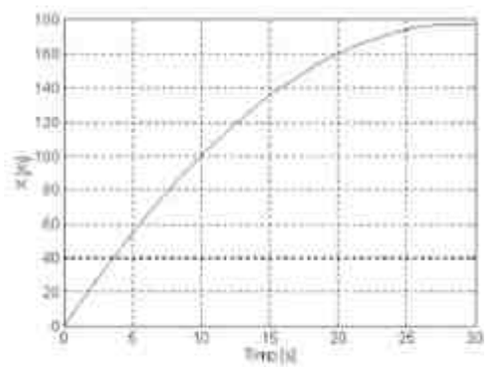

Fig. 7 Braking stroke variation

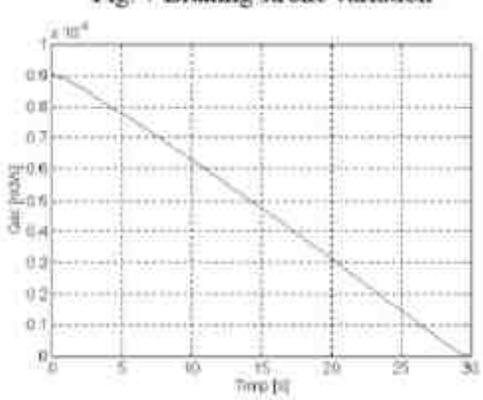

Fig. 8. The accumulators flow variation

In the figure 5, are presented the gas volume variation, which is in continuous decreasing process and the oil volume variation, which is in increasing process. In the figure 6, is presented the pressure variation in the storage accumulators battery. In the figure 7 is presented the braking stroke variation and in the figure 8 is the accumulators flow variation

The diagrams from figure 5 illustrate the accumulating hydrostatic energy, which create the condition to use this energy in acceleration phases. The variation of others parameters were obtained, also, by mathematical modelling and computer simulation.

2.4 The main physical modules of the energy recovering system

The main physical modules, which compound the energy recovery system, are presented in the next figures: the hydro-mechanic module in the figure 9, the hydraulic central in figure 10; the battery of accumulators in the figure 11; the electronic and informatics systems are presented in figure 12. In the figure 13 is presented the inside the control panel and in figure 14 is presented the out side the control panel

Fig. 9 The hydro-mechanic module

Fig. 10 The hydraulic central

Fig. 11 The accumulators battery

Fig. 12 Electronic and informatics systems

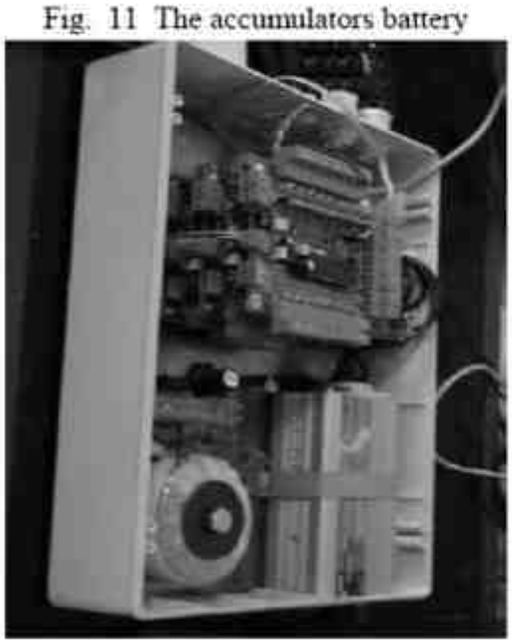

Fig. 13 Inside the control panel

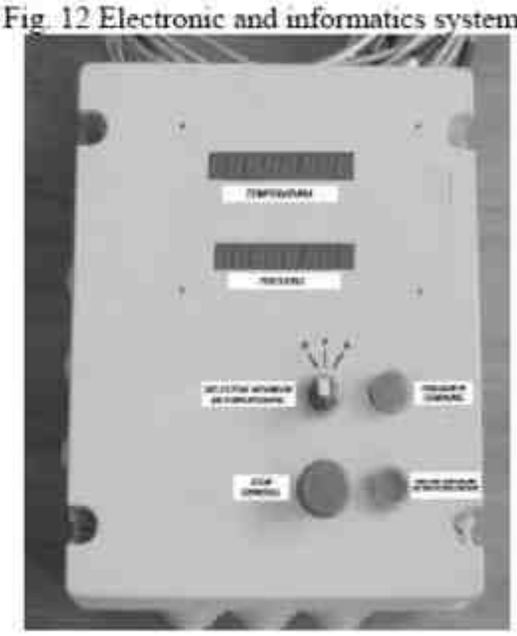

Fig. 14. Outside the control panel

The implementation of the recovering system on one motor vehicle transforms it in a hybrid vehicle and leads to decreasing of the fuel consumption and to reduce the gas emissions. Before the implementation on the motor vehicle, in order to develop the experimental research, the main modules of the mechatronic system, for the recovering braking energy, where subjected on the laboratory testing, in order to verify the main functional parameters.

3. Conclusions

The paper presents the possibility to design, manufacturing and implementing the energy recovery systems on motor vehicles.

From the above, can say that the hydraulic systems for energy recovering are good solutions in order to increasing of energy efficiency of the road vehicles.

The adopted technical solution allows extrapolation to different sizes of vehicles, for medium and heavy vehicles, and can be mounted on vehicles both new and old motor vehicles, in an action for the rehabilitation or upgrading them.

Hydraulic and electrical components, are available on the market and allow realization, in good conditions, of the kinetic energy recovery systems.

REFERENCES

[1]. M. Untaru, V. Cîmpian, C. Hilohi, V. Vărzescu, „Construcția și calculul automobilelor" (Construction and calculation of car). Editura Tehnicã, Bucureºti, 1974.

[2]. N. Vasiliu, Daniela.Vasiliu, I. Seteanu, V . Rădulescu, „Mecanica Fluidelor ºi sisteme hidraulice"(Fluid Mechanics and hydraulic systems), Editura Tehnicã, 1999.

[3]. V. Marin, Al. Marin, „Sisteme hidraulice automate-construcție reglare exploatare" (Automatic hydraulic systems. Construction, installation, operation)., Editura Tehnicã, Bucureºti, 1987.

[4]. C. Calinoiu, "Senzori si traductoare" (Sensors and transducers), vol. I, Editura Tehnicã, Bucuresti, 2009..

[5]. N. Vasiliu, P. Drumea, Daniela Vasiliu, Computer simulation of an electrohydraulic system. In Modelling and simulation, 1992, pp. 669-673.

[6]. C.Cristescu, „Recuperarea energiei cinetice la franarea autovehiculelor" (Recovery of kinetic energy from vehicle braking), Editura AGIR, Bucuresti, 2008.

INSTALATIE PNEUMOHIDRAULICA DE ACTIONARE A SERVOMOTOARELOR APARATULUI DIRECTOR SI PALETELOR ROTORULUI TURBINEI KAPLAN SI FRANCIS CU AUTOMAT PROGRAMABIL

Brevet de Inventie Nr. 120423

PNEUMO HYDRAULIC INSTALLATION FOR POWERING SERVO MOTORS OF THE HEAD APPARATUS AND BLADES OF THE ROTOR OF THE KAPLAN AND FRANCIS TURBINES WITH AUTOMATIC SETUP

Patent no. 120423

Florian-Petre DAIA*, Petre TIRIPLICA* ,
Ion TIRIPLICA*, Simona Greta NEMTOIU*

**SC HIDROELECTRICA SA - Sucursala Hidrocentrale TG-JIU*
Str. Prelungirea Vasile Alecsandri nr. 1 ,TG JIU , Jud. GORJ , Fax 0253 218 670

Abstract: *The installation represents the materialization of a new operational concept and a modern constructive solution of the Underpressure Oil Group attached to the hydraulic turbines.*
It is based on an innovative operational concept which mean that the functions which control the pneumo hydraulic dimensions and the control functions of the operational elements are provided by an automatic setup system and it is performed with the newest hydraulic and pneumatic components which ensure high safety and reliability.
The hydraulic components are mounted on an integrated hydraulic plate, the pneumatic components are placed in a compact pneumatic case and the automatic setup system is in an electric panel which provides the supervision and control of the operations. All these make from the pneumo hydraulic installation a compact equipment which works properly and regularly.

The new concept mean an undertaking of all the tasks implying a proper operation and supervision of the Underpressure oil group and by the operations performed are provided the following things:

- The operational parameters set by the user are memorized

- Are started up the operational functions at the set parameters

- The main hydraulic and pneumatic dimensions are monitored

- There is provided a sound and-or light warning when the system does not work properly and the operational parameters are exceeded

- The operational parameters and main events occuring are memorized in real time

- The data is transferred from the memory by means of operational interfaces to a PC for an ulterior study.
The new and modern solution uses part of the old structure :
- The air and oil buffer accumulator
- The electropumps which pump up the oil
- The oil reservoir
- The connection to the high pressure compressed air installation (for the first filling with air of the buffer accumulator)
This solutions uses, for an additional supply with highly pressurized air (after the first filling of the accumulator) a high pressure compressor of low power and volume which reduces the4 consumption of electricity during operation.
For this purpose the authors realized an installation which provides high safety and reliability being possible to monitor on line the operational parameters by integrating in the SCADA system at the level of hydroelectric power station.

Noutate

Reprezinta un concept modern de actionare a turbinelor , realizat cu componente hidraulice si pneumatice de ultima generatie , la care functiile de comanda ale elementelor de executie sunt asigurate de un Automat Programabil (AP)
In functionarea automata instalatia pneumohidraulica poate asigura trei regimuri de functionare distincte , prin setarea parametrilor , dupa cum urmeaza :
? Functionare prin controlul presiunii de aer ;
? Functionare prin controlul nivelului de ulei ;
? Functionare combinata prin controlul presiunii de aer si nivelului de ulei .
Parametrii de functionare nu sint prestabiliti si pot fi setati independent ca valoare minima si maxima , atit pentru presiunea aerului cit si pentru nivelul de ulei .
Schema hidraulica este universal functionala , fiind pretabila pentru toate tipurile de turbine printre care turbinele Francis si Kaplan .
Punerea in functiune a instalatiei pneumohidraulice , de la nivelul de ulei si presiunea de aer “zero” se face in secventa automata , fara supraveghere .
Asigura posibilitatea testarii independente a echipamentelor componente , prin comenzi manuale cum ar fii :
? pornire electropompe ;
? pornire electrocompresor ;
? completare si descarcare presiune de aer din accumulator ;
? introducere sau golire ulei din acumulatorul aer-ulei .
Elimina condensul din aerul sub presiune , prin filtrarea acestuia si purjarea automata .
Asigura monitorizarea on-line a parametrilor de functionare si inregistrarea evenimentelor aparute in instalatia pneumohidraulica .
Poate fi integrat cu usurinta in sisteme de tip SCADA .

Domeniul de aplicare

Instalatia pneumohidraulica de actionare a servomotoarelor aparatului director si paletelor rotorului turbinelor Kaplan si Francis cu automat programabil, este folosita in special in Hidroenergetica, la centralele hidroelectrice in scopul asigurarii fluidului de lucru (ulei sub presiune) pentru actionarea turbinelor hidraulice .
Este pretabila folosirii in orice domeniu industrial , in care in procesul de productie este necesar ulei sub presiune pentru actionarea diferitelor organe ale echipamentelor mecanice .

Realizari pina in prezent

Instalatia brevetata de catre autori , a fost aplicata in modernizarea instalatiilor GUP din cadrul CHE ale SH Tg-Jiu si functioneaza fara probleme in urmatoarele instalatii :
o CHE Tismana - HG 1
o CHE Tismana - HG 2
o CHE Motru - HG 2
Realizarea celor trei instalatii s-a facut in baza Avizului CTA HIDROELECTRICA , Nr. 22 / 2002 si a Avizului UCM Resita Nr. 182 / 212 / 10.05.2002 .
Solutia brevetata de noi , ***este apreciata ca o solutie moderna pretabila pentru automatizarea centralelor***, care functioneaza fara probleme cum este specificat in studiul intitulat “Solutii pentru partea electrica si de automatizare in centrale”, elaborat de SC Hidroelectrica SA , prin ing. Mortu Stefan .
Sub egida Ministerului Educatiei , Cercetarii si Tineretului-Autoritatea Nationala de Cercetare Stiintifica a selectat inventia noastra pentru participarea la **Salonul International al Inventiilor, Tehnicilor si Produselor Noi de la Geneva - Elvetia , editia a 36-lea** in standul rezervat Romaniei .
Salonul International al Inventiilor , Tehnicilor si Produselor Noi de la Geneva - Elvetia s-a desfasurat in perioada 02-06.04.2008 in cadrul expozitiei PAL EXPO Geneva , unde au participat autorii instalatiei brevetate .
Prezentarea lucrarii la acest eveniment , in standul amenajat pentru Romania , s-a facut printr-un poster de prezentare editat sub sigla SC Hidroelectrica SA , Sucursala Hidrocentrale Tg-Jiu si SC 'HIDROSERV' SA PORTILE DE FIER SA cit si prin pliante de prezentare realizate de autori in limba franceza si engleza .

ROMÂNIA

DUPLICAT

COTITULAR
AL BREVETULUI
DE INVENȚIE
NR. 120423

OFICIUL DE STAT PENTRU INVENȚII ȘI MĂRCI

Brevet de invenție

Nr. 120423

Acordat în temeiul Legii nr 64/1991 privind brevetele de invenție, republicată în baza Legii nr. 203/2002.

Titular: DAIA FLORIAN-PETRE, TÂRGU JIU, JUDEȚUL GORJ, RO; TIRIPLICĂ PETRE, TÂRGU JIU, JUDEȚUL GORJ, RO; TIRIPLICĂ ION, TÂRGU JIU, JUDEȚUL GORJ, RO; NEMȚOIU SIMONA GRETA, TÂRGU JIU, JUDEȚUL GORJ, RO

Titlul invenției: INSTALAȚIE PNEUMOHIDRAULICĂ DE ACȚIONARE A SERVOMOTOARELOR APARATULUI DIRECTOR ȘI PALETELOR ROTORULUI TURBINEI KAPLAN ȘI FRANCIS, CU AUTOMAT PROGRAMABIL

Inventatori: DAIA FLORIAN-PETRE, TÂRGU JIU, JUDEȚUL GORJ, RO; TIRIPLICĂ PETRE, TÂRGU JIU, JUDEȚUL GORJ, RO; TIRIPLICĂ ION, TÂRGU JIU, JUDEȚUL GORJ, RO; NEMȚOIU SIMONA GRETA, TÂRGU JIU, JUDEȚUL GORJ, RO

Descrierea invenției, revendicările și desenele explicative însoțesc și fac parte integrantă din prezentul brevet de invenție.
Durata de protecție a brevetului de invenție este de 20 ani, cu începere de la data de 14.01.2002, cu condiția plății taxelor anuale de menținere în vigoare a brevetului.

Conform date de mai sus prin semnătura și aplicarea sigiliului
Director General

București, Data eliberării 30.07.2007

OFICIUL DE STAT PENTRU INVENȚII ȘI MĂRCI • ROMÂNIA •

Lucrarea a fost prezentata si **domnului dr. Ionel Nicu Sava**, ambasadorul României la Berna in timpul vizitei efectuate cu ocazia zilei ROMANIEI din cadrul Salonului de Inventii .
In urma deliberarii juriului international , format dintr-un numar de 78 specialisti pe diferite domenii de activitate , lucrarea noastra a obtinut o **Medalie de Argint** in cadrul Clasei A , intitulata Mecanica-Motoare-Masini-Utilaje-Procedee industriale-Metalurgie ce a ce reprezinta un succes atit pentru noi cit si pentru unitatile pe care le-am reprezentat la Salonul Inventiilor .
De asemenea Ministerului Educatiei , Cercetarii si Tineretului Autoritatea Nationala de Cercetare Stiintifica a selectat inventia noastra pentru participarea la **Concursul International Bruxelles - EUREKA** dedicat inventicii, organizat in cadrul **Salonului INNOVA**, desfasurat in perioada 13-15 noiembrie 2008, editia a 57-lea in standul rezervat Romaniei .
Prezentarea lucrarii la acest eveniment , in standul amenajat pentru Romania , s-a facut printr-un poster de prezentare editat sub sigla SC Hidroelectrica SA, Sucursala Hidrocentrale Tg-Jiu si SC 'HIDROSERV' SA PORTILE DE FIER SA cit si prin pliante de prezentare realizate de autori in limba franceza si engleza .
In urma deliberarii juriului international lucrarea a obtinut o **Medalie de Argint** in cadrul Clasei 11, intitulata Energetica si un **Premiu special din partea Salonului international al inventatorilor din Polonia, IWIS**.

Autorii ,

DAIA FLORIAN-PETRE SC HIDROELECTRICA SA Sucursala Hidrocentrale TG-JIU
TIRIPLICA PETRE SC HIDROELECTRICA SA Sucursala Hidrocentrale TG-JIU
TIRIPLICA ION SC HIDROELECTRICA SA Sucursala Hidrocentrale TG-JIU
NEMTOIU SIMONA GRETA SC HIDROELECTRICA SA Sucursala Hidrocentrale TG-JIU

ASSISTED OPTIMISATION OF THE ROBOT DYNAMIC BEHAVIOR WITH MAGNETORHEOLOGICAL DAMPER

OPTIMIZAREA ASISTATA A COMPORTAMENTULUI DINAMIC AL UNUI ROBOT CU AMORTIZOR MAGNETOREOLOGIC

Adrian OLARU*, Serban OLARU**

*Machines and Manufacturing Systems
University Politehnica of Bucharest
Bucharest, Romania
e-mail: aolaru_51@yahoo.com

**Technical Department
Romsys
Bucharest, Romania
e-mail: serban1978@yahoo.com

Abstract: *The paper showed the assisted research of one magnetorheological damper and the influences to the dynamic behavior of the industrial robots. The research contents the assisted theoretical simulation of the new mathematical model, the parameterization of the known characteristics of the magnetorheological damper and the assisted establish of the influences of the model coefficients to the characteristics parameters. In the assisted experimental research was established the values of all coefficients of the proper mathematical model to assure the concordance between the experimental and the theoretical characteristics. By knowing the real mathematical model of the damper was possible to develop the new matrix -vector form of the force- moment and the research of the global dynamic behavior of the industrial robot with proper smart damper system.*

Keywords: assisted research; magnetoreological damper; mathematical model; LabVIEW instrumentation; industrial robot.

I. INTRODUCTION

The paper describes one new mathematical model of the magnetorheological damper (MRD) and one new method to establish, after the assisted experimental research, all coefficients of the mathematical model and finally the new proper validated model. The research has been made in the Dynamic Behaviour Robots Laboratory from IMST Faculty, University "Politehnica" of Bucharest, Romania. In the research, we used the didactical arm type robot and one proper MRD, mounted between the base and the end effector of the didactical robot. In the paper was researched one complex damper model with many functional and constructive parameters [1, 2, 3, 5]. Bouc-Wen modified model [4, 5] was the choose complex mathematical model completed by new four polynomial expressions of the third order and with new form of the histeresys parameter with some important frequencies from the experimental Fourier spectrum. The virtual LabVIEW created apparatus for these theoretical and experimental research, is generally, it is possible to use in many others mechanical applications.

The virtual instrumentation presented in the paper, are special for these determinations where assure one small cost and one short time of the research. The paper contains the assisted research of the MRD to know some dynamic characteristics of the damper, like force versus velocity and force vs. displacement, and finally to determine the damper energy and decreasing the transmission of the vibration between the floor to the tool center point (TCP) of the robot. In the paper was researched the structure of one didactical arm type robot with U profile of the arms. The experimental research has been made by exciting, with the electromagnetic exciter, the robot base modulus and by data acquisition of the exciting force, damper force, acceleration of the base and end-effector modules and the displacement of the TCP. For that on used one experimental setup presented in the paper.

II. PROPOSED MATHEMATICAL MODEL

By compare the experimental and theoretical research on conclude that the mathematical approached model was the Bouc- Wen modified model (Duke, Spencer et al., 1997) completed by new four relations of the third order for the internal rigidity, damper and new form of the hysteresis parameter. With the complex mathematical model with many parameters (18 parameters of the Bouc-Wen model, with new 19 parameters of the proper equations) was possible to approximate better, by the numerical simulation of the characteristics, the experimental dynamic damper characteristics. The mathematical model was established using the mechanical Bouc-Wen model, fig.1 and the experimental research.

The new four equations, for the internal parameter of the rigidity, viscose damper coefficient, were introduced because these parameters are not constant, his dynamic evolution are polynomial. More, the hysteresis parameter is not constant in all frequency domain, it is function of the Fourier frequency spectrum. For that, the mathematical model was completed by one periodical function of the hysteresis parameter with the more important frequencies from the Fourier spectrum determined by experimental research.

The complex mathematical model of the Bouc-Wen damper, completed by the new relations is:

$$
\begin{aligned}
f &= c_0(x'-y') + k_0(x-y) + k_1(x-x_0) + \alpha z \\
y' &= \frac{1}{c_0+c_1}\left[\alpha z + c_0 x' + k_0(x-y)\right] \\
z' &= -\gamma\left|x'-y'\right| z \left|z\right|^{n-1} - \beta(x'-y')\left|z\right|^{n} + \delta(x'-y') \\
\alpha(i) &= \alpha_3 i^3 + \alpha_2 i^2 + \alpha_1 i + \alpha_0 \\
c_0(i) &= c_{03} i^3 + c_{02} i^2 + c_{01} i + c_{00} \\
c_1(i) &= c_{13} i^3 + c_{12} i^2 + c_{11} i + c_{10} \\
k_0(i) &= k_{03} i^3 + k_{02} i^2 + k_{01} i + k_{00} \\
\delta &= \sum \delta_{0i} \sin(2\pi \upsilon_i + \varphi_i)
\end{aligned}
\qquad (1)
$$

where f is the damping force [N]; x and y are the primary, respectively the secondary displacement variables [m]; z is the internal history dependency variable of the MRD [m];

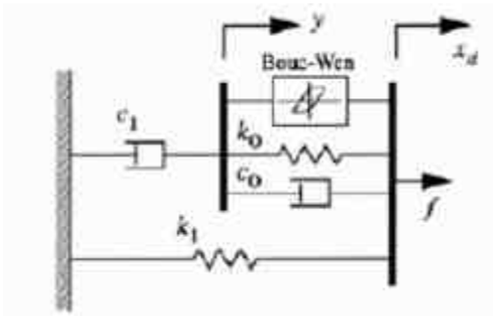

Figure 1. Mechanical model of the MR-damper based on the Bouc-Wen model (Dyke et al., 1998).

k_0, k_1 are the non linear internal rigidity of the MRD, [N/m] depending of the current intensity i [A]; c_0 and c_1 are the internal viscous damping parameters of the MRD [Ns/m]; α is the internal parameter what have non linear evolution and depend of the magnetic variable field (electrical intensity); parameter β characterize the gain of increasing of the damping force versus velocity; x_0 is the perturbation displacement [m]; is the hysteresis parameter; ä $_{0i}$ is the hysteresis parameter for each frequencies from the Fourier spectrum; υ_i is the frequency from the Fourier spectrum; φ_i is the phase in each frequencies.

III. ASSISTED THEORETICAL RESEARCH

With the presented mathematical model was created the virtual LabVIEW instrumentation for the assisted theoretical analyze of the influences of the functional or constructive MRD parameters and coefficients versus the dynamic characteristics. It was studied the evolution of the damper force versus velocity, damper force vs. displacement, the periodical damper force vs. time, damper energy and displacement vs. time. In the theoretical assisted research all these characteristics were being show comparative for the different values of all 37 coefficients. In this paper is present for the first time the assisted on-line method to choose these coefficients with virtual instrumentation by compare these characteristics with the experimental. The icon of the virtual LabVIEW instrument for the theoretical research is presented in fig.2. Some of the comparative results are being show in the figures 3-4 and the parametric characteristic in fig.6.

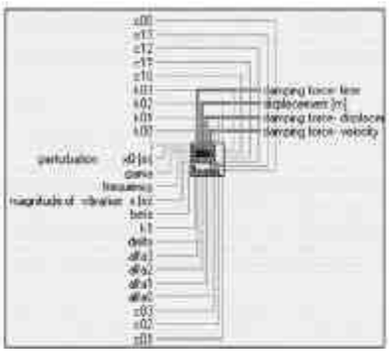

Figure 2. Icon of the virtual LabVIEW instrument for the theoretical assisted Bouc-Wen modified model

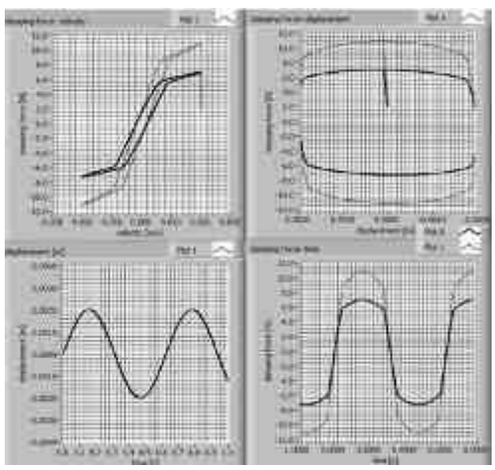

Figure 3. The damping force vs. velocity characteristic of the researched magnetorheological damper when was changed the intensity from 1.2 to 1.5A

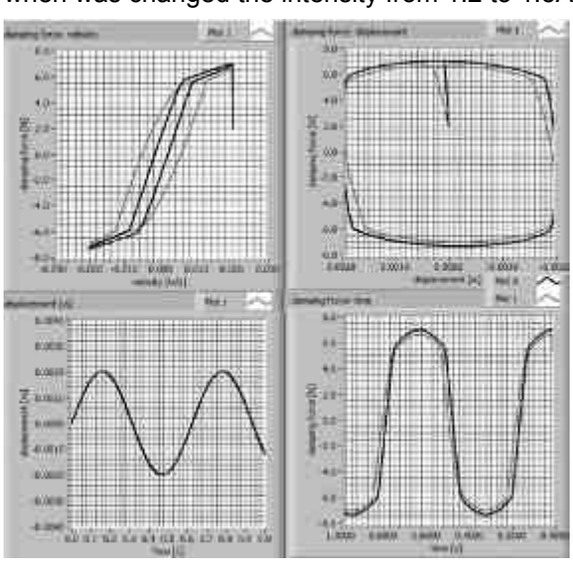

Figure 4. The MRD's characteristics: damper force vs. velocity, displacement, time, velocity vs. time in the case when was changed ä from 20000 to 5000

From the theoretical research was possible to determine how some coefficients of the mathematical model influence the parameters of the force vs. velocity characteristic, fig.6. After the analyze of the numerical simulation we can remark the followings: the change of the current intensity determines the change of the parameters p1, p2, p6, p7; the change of the perturbation displacement x_a determines the change of the parameters p3, p5; the change of the internal coefficient γ determines the change of the parameters p3, p5; the change of the magnitude of the vibration x determines the change of the parameters p7, p8, p9; the change of the global rigidity k_1 determines the change of the parameters p3, p4, p5, p7; the change of the damping force gain β determines the change of the parameters p3, p6, p7; the change of the hystheresis term δ determines the change of the parameters p1, p2, p3, p4, p5, p9; the change of the internal coefficient of the second order α_2 determines the change of the parameters p3, p6, p7; the change of the internal coefficient of the first order α_1 determines the change of the parameters p3, p6, p7, p9; the change of the viscose damping parameter of the second order c_{02} determines the change of the parameters p3. All the coefficients of the mathematical model were changed and were analyzed the influences to the parametrical force vs. velocity damper characteristic [1, 2]. To approximate better the real behaviour on used one virtual LabVIEW instrument, fig.5, to simulate one complex input acceleration signal with 10 frequency components, different phase and magnitude.

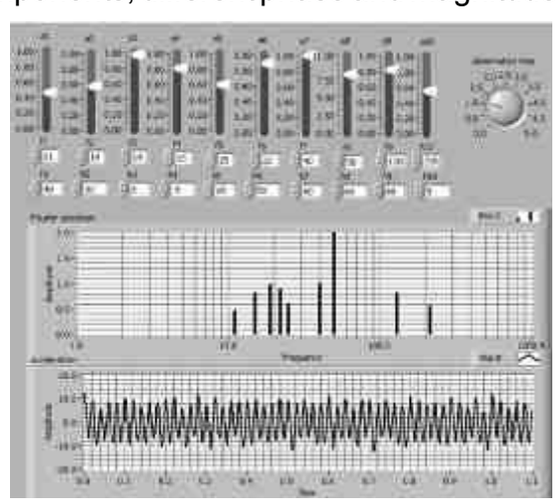

Figure 5. Virtual LabVIEW instrument for the simulation of the complex acceleration signal

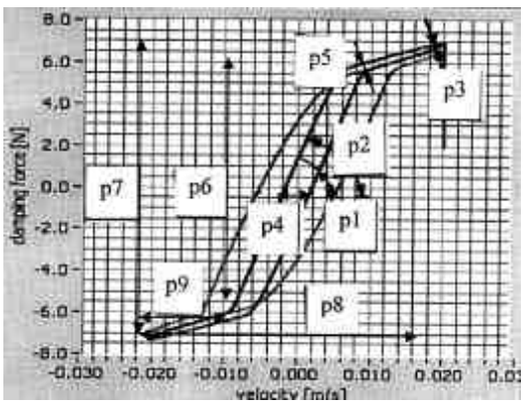

Figure 6. The parametric characteristic of the damping force vs. velocity of the MRD

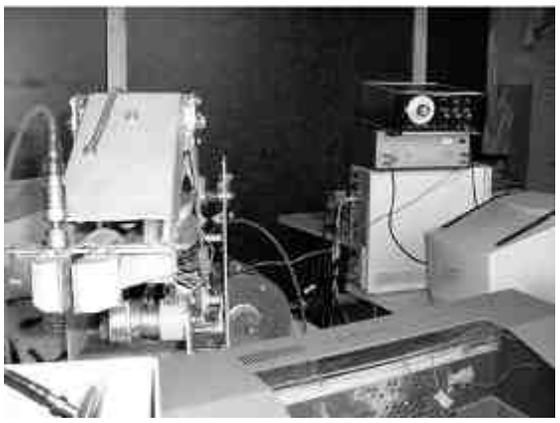

Figure 7. The experimental research set up

Figure 8 Magneto rheological damper with inductive transducer

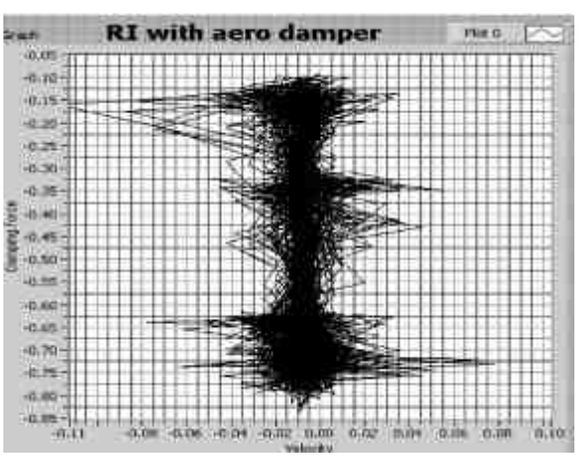

Figure 9. The FFT of the experimental global dynamic compliance and the transmissibility between the base and end-effector of the didactical robot

IV. EXPERIMENTAL RESEARCH

For the determination of some important characteristics of the MRD joints in to the structure of the didactical robot, on used one experimental setup presented in figures 6 and 7. Now, in the world, more and more is necessary to use the LabVIEW instrumentation to assure the data acquisition and the virtual simulation of the dynamic behaviour. The experimental stand contains the following components: didactical arm type robot; the electromagnetic exciter type 11075 from RFT Germany; connector type CB-68 LP from National Instruments USA; acquisition board type PCI 6224M from National Instruments USA; function generator type POF-1 from KABID Poland; amplifier type LV 102 from MMF Germany for the generator; personal computer from Taiwan; inductive displacement transducer type 16.1 IAUC Romania; accelerometer type 601A01 SN 30711 from IMI USA; Hottinger apparatus type KWS/T-5 from Germany and proper MRD. The experimental research has been made by exciting the base of the didactical robot with the periodical excitation force and by data acquisition of the excitation force, damper force of the MRD, acceleration of the base and end- effector modules and of the displacement of the end- effector. The velocity was determined by the derivation of the displacement signal. Were determined the FFT of the dynamic compliance of the robot, transmissibility between the base and the end-effector and the transfer function of the damper.

FFT of the compliance and transmissibility are necessary to accomplish the mathematical model with the magnitude and frequency parameters. After analyze of the experimental characteristics we can remark that the real hystheresis characteristic have many oscillations because the oscillations of the damper forces and of the didactical robot structure, fig.8. For this reason exist the differences between the hystheresis of the real and simulate characteristics, see fig.9.

V. ASSISTED VALIDATION OF THE MODEL

After the comparison of the real and simulate characteristics fig.10, results the real values of all coefficients of the model.

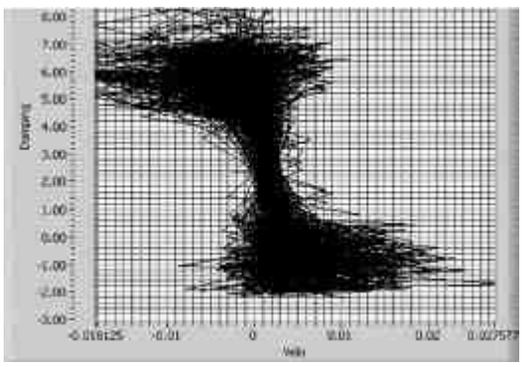

Figure 10. The comparison between the theoretical and experimental force vs. velocity characteristics

The real mathematical model of the proper MRD what determine the similar allure of the characteristic will be:

$$
\begin{aligned}
& f = c_0(x' - y') + k_0(0.003 - y) + 100(x - 0.002) + \alpha z \\
& y' = \frac{1}{c_0 + c_1}[\alpha z + c_0 x' + k_0(0.003 - y)] \\
& z' = -747|x' - y'|z|z|^{n-1} - 1047(x' - y')|z|^n + 40000(x' - y') \\
& \alpha(i) = 0.9i^3 + 1.1i^2 + 0.9i + 0.9 \\
& c_0(i) = 60i^3 - 70i^2 + 19i + 7 \\
& c_1(i) = -i^3 + 300i^2 + 5i + 1000 \\
& k_0(i) = 200i^3 + 100i^2 + 100i + 300 \\
& \delta = 50\sin(10\pi + 0.21) + 1.1\sin(18\pi + 0.31) + \\
& + 1.4\sin(30\pi + 0.62)
\end{aligned}
\tag{2}
$$

VI. NEW MATHEMATICAL MODEL FOR THE DYNAMIC BEHAVIOR OF THE ROBOTS

The new mathematical model of the matrix-vector form of the force- moment in all robots joints will be:

where: $f(i)$ will be the damper force depending of the magnetic field applied on the MRD spools. With this new form of the known relation [1] will be possible to control on-line the evolution of the active force, the vibration of the robot structure and finally to obtain one transfer of the vibration in to the higher frequency domain, fig.12. This real validated mathematical model will be used in the optimization of the global dynamic behaviour of the robot by applying the smart MRD system fig.11.

VI. OPTIMIZATION OF THE DYNAMIC BEHAVIOR OF THE INDUSTRIAL ROBOTS WITH MAGNETORHEOLOGICAL DAMPER

The final form of the force- moment matrix vector will be used in on-line optimization of the dynamic behavior of the industrial robot and open the way to develop the smart damper system. One of this intelligent damper system created with LabVIEW instrumentation, the data acquisition board PCI 6224M from National Instrument and accelerometers it is show in fig.11. The smart damper system applied to the robot structure contains: the sensor (accelerometer), the control soft (proper virtual LabVIEW instrument), the control hard (connector, acquisition board, the amplifier and the electrical link to the magnetorheological damper spools) and the actuator (the proper MRD).

By apply the smart damper on the robot structure we obtained the increase of the some slow frequencies and moving them to the high frequency field, see fig12.

$$
\begin{pmatrix} F^0 \\ M^0 \end{pmatrix} = \begin{bmatrix} z_u & 0 \\ 0 & z_u \end{bmatrix} \begin{pmatrix} D_{0,i}(F_R^i + f(i)) \\ D_{0,i} M_R^i \end{pmatrix} - diag\left[sign \frac{v_u^i}{|v_u^i|} m_{u_i} \quad sign \frac{\omega_u^i}{|\omega_u^i|} J_{u_i} \right] \cdot \begin{pmatrix} (a_{i,0}^i) + [\tilde{\omega}_{i,0}^i](r_{u_i}^i) \\ (\varepsilon_{i,i-1}^i) + [\omega_{i-1,0}^i][\omega_{i,i-1}^i] \end{pmatrix} +
$$

$$
+ \begin{bmatrix} z_u & 0 \\ 0 & z_u \end{bmatrix} \cdot \left([G_{i,0}][\tilde{b}_{i,0}] \left((D_{0,i}(F_R^i + f(i))) - diag\left[sign \frac{v_u^i}{|v_u^i|} m_{u_i} \right] \cdot [D_{0,i}](a_{i,0}^i) + [\tilde{\omega}_{i,0}^i](r_{u_i}^i) \right) \right) \tag{0}
$$

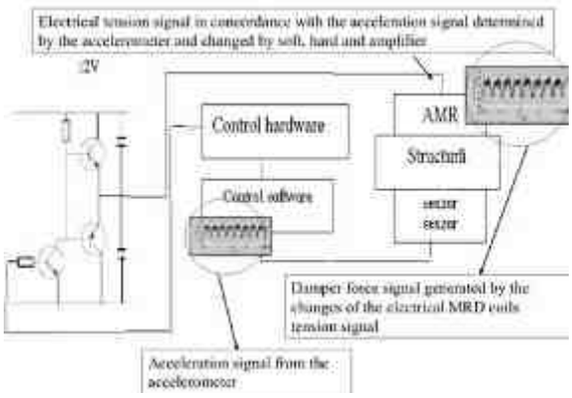

Figure11. Didactical smart damper system applied on the robot structure

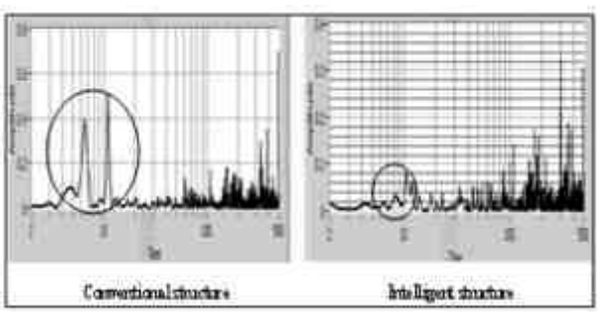

Figure 12. The Fourier spectrum after application of the smart damper on the robot structure

Other way to increase the slow frequencies was the input in to the movement of one control delay in one phase or in the change of the direction, see fig.13. With this delay we obtained to move the first slow frequencies 1, 2, 3, 4 Hz to the higher 4, 5, 6, 7 Hz. By applying the delay together with the smart damper we obtained the Fourier optimal spectrum where the important (with the big magnitude) slow frequency is 20 Hz, compare with the first frequency of the case with aero damper, 4Hz see fig.14.

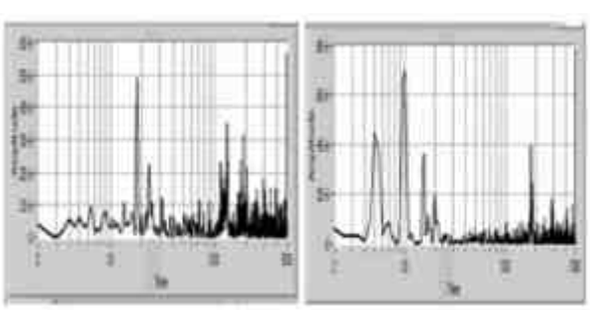

Figure 14. Fourier spectrum of the arm type didactical robot transfer function for the following cases:
a- movement in up direction with MRD,
b- movement in up direction with aero damper

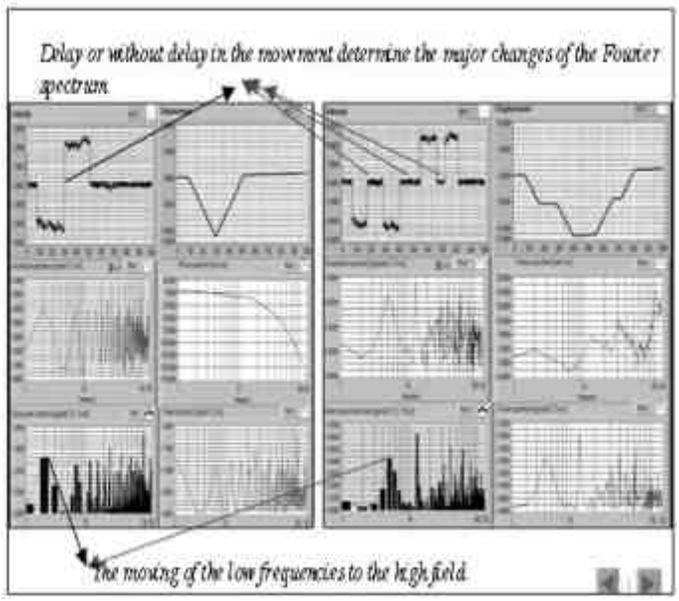

Figure 13. The real and Fourier spectrum durring some movements

VII. DISCUSION AND CONCSIONS

After the analyze of the results, we can do the following conclusions: the assisted method of the research of the MRD open the way to optimize the global dynamic behaviour of the industrial robots by on-line application of the smart MRD. We can see that by changing, on-line, the intensity of the current, *i* will be possible to change the characteristics of the damper and finally the dynamic behavior. The assisted method and the virtual LabVIEW instrumentation are generally, we can apply in many other mechanical applications. The future work will be the assisted research of the robot by using the proper mathematical model for the MRD.

REFERENCES

[1] Olaru, S., Oprean, A., Olaru, A. (2008).Assisted research of the new Bouc-Wen rheological damper, *Proceedings of OPTIROB 2008*, (Ed.) Olaru, A., pp. 143- 152, ISBN 978-973-648-784-2, Predeal, may 2008, Bren, Bucharest.

[2] Olaru, A., Olaru, S. (2006). Research of the industrial robots viscose global dynamic damper coefficient with LabVIEW instrumentation, *Proceedings of CAX'2006,* (Ed.)Mikolajczyk T., pp. 73- 81, ISBN 978-83-89334-49-7, Bydgoszcz, nov. 2006, Akademia Techniczno-Rolnicza, Bydgoszcz.

[3] Choi, S.-B. & Lee, S.-K.(2001) A Hysteresis Model for the Field-Dependent Damping Force of a Magnetorheological Damper, *Journal of Sound and Vibration* 245(2), pp.375-383.

[4] Dyke, S.J., Spencer, B.F. Jr., Sain, M.K. & Carlson, J.D.(1998) An experimental study of MR dampers for seismic protection, *Smart Mater. Struct*, 7, pp.693-703.

[5] Sinan, B., Dynamic modeling analysis of motorized spindles for optimizing the spindle cutting performance, *Proceedings of the Conference 19-th*, Manchester Editor Institute of Science and Technology, 2005, pp.89-198.

WOBBLER HF COMANDAT PE PC
WOBBLER HF ORDERED ON PC

Cosmin Tãmaº, Alexandru Vasile, Gaudenþiu Vãrzaru, Andrei Drumea
Universitatea Politehnica Bucureºti,
Facultatea de Electronicã, Telecomunicaþii ºi Tehnologia Informaþiei
Centrul de Electronicã Tehnologicã ºi Tehnici de Interconectare
cosmin.tamas@cetti.ro

1. Introducere

Aparatul cercetat ºi realizat face parte din categoria echipamentelor de mãsura destinate laboratoarelor pentru studierea comportãrii circuitelor pasive la diferite frecvente ºi nivelele de semnal, putând fi utilizat insã cu succès ºi în cazul circuitelor active. Simplitatea ºi costul mic al echipamentului îl poziþionează în zona aplicativã de costuri reduse, construcþia lui putând fi realizatã în serie chiar ºi de cãtre un începãtor în lucrul cu componente SMD (surface mountain devices). Aparatul este proiectat să lucreze într-un domeniu de la 0 la 60 MHz. Spre deosebire de aparatele profesionale de mii de euro, cel realizat prezintã avantajul unei rezoluþii mai bune de 1 Hz , citirea fãcându-se cu mare uºurinþã cu ajutorul markerilor de pe ecran sau prin plasarea cursorului mausului in punctul dorit. Un exemplu concret îl reprezintã echipamentul HP4396B (Agilent) care costã câteva mii de euro, pe care nu poate fi vizualizatã caracteristica decât sub forma unui ac foarte îngust. Caracteristica unui filtru SSB, care este de 3-4 KHz nu este analizatã de aparat deoarece nu coboarã sub 300 de KHz. La generatoarele actuale de tip DDS asemãnãtoare cu cel realizat, putem baleia pe întreg ecranul chiar la benzi de 1 KHz.

2. Schema bloc

Aparatul a fost realizat practic în cadrul UPB-CETTI ºi este folosit pentru studierea circuitelor pasive (circuite cuplate RLC, filtre ceramice, sau realizarea filtrelor de bandã foarte îngustã, Q de ordinul 10^4 folosind componente tip cristale cu cuarþ procurabile din comerþ la preþuri modice). Realizarea Wobbler-ului are la bazã schema bloc din figura 1.

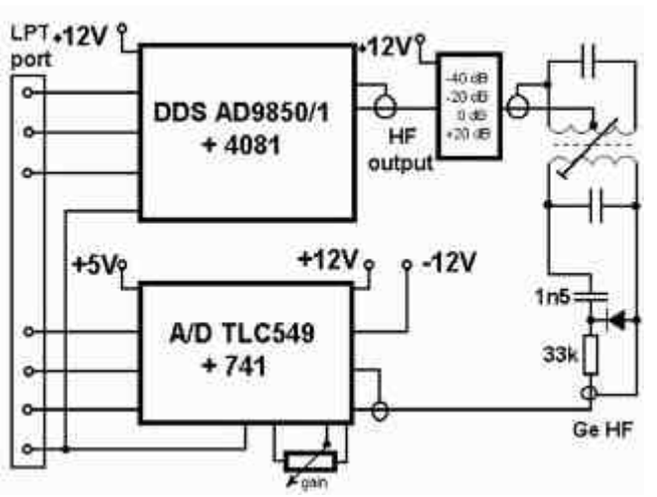

Figura 1. Schema bloc a Wobbler-ului

Analizând schema bloc din figura 1, sistemul este compus din blocul generator de semnal vobulat, realizat in jurul circuitului AD9851 (Analog Devices), blocul de demodulare ºi amplificare, construit cu un amplificator operaþional ºi un convertor ADC TLC549.

Blocul generator de semnal: este construit pe baza circuitului AD9851, un sintetizor digital direct, ce poate genera prin procedee digitale un semnal analogic sinusoidal cu o rezoluþie de ordinul zecimilor de micro-Herti . Acest circuit DDS (vezi schema bloc din figura 2) este alcãtuit dintr-o unitate matematicã de control, un acumulator de fazã (in esenþã un numãrãtor) care comandã un convertor de tip amplitudine/frecvenþã, însã semnalul ºi de aceastã datã este tot unul digital. Pentru obþinerea semnalului analogic se foloseºte un convertor pe 10 biþi Digital/Analogic care oferã informaþia analogicã. Bineînþeles în urma conversiei digital/analog semnalul trebuie filtrat folosind un Low Pass Filter (Filtru Trece Jos).

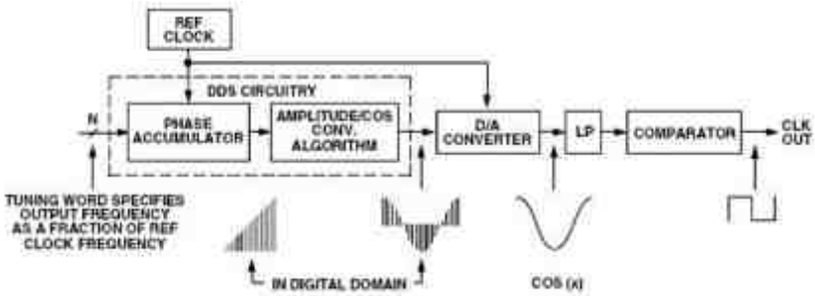

Figura 2. Schema internã a generatorului DDS

3. Functionare

Vobularea semnalului se realizeazã prin comanda primitã din PC de cãtre unitatea DDS. Pentru comunicaþie, existã un pin de clock (pentru sincronizarea datelor intre PC si unitatea matematicã din DDS), pinul de date (se trimit bidirectional, atât datele cat ºi adresele, care pot fi sub forma de 8 biþi, date transmise paralel sau pe un singur bit de date (transmisie serialã). O altã comandã este Frequency_Update (pinul care dã comanda de reînprospatare a bufferului dupã ce informaþiile de la PC au intrat în registrul de date al circuitului DDS). Circuitul este astfel în permananþã interogat ºi comandat de catre PC pentru generarea semnalului vobulat. Acest bloc reprezintã partea de generare a semnalului, fiind partea de emisie din partea calculatorului. La capãtul opus se aflã modulul de recepþie, cel care preia informaþia de la circuitul aflat sub testare ºi o trimite mai departe calculatorului pentru afiºare pe ecran si feedback pentru DDS.

Blocul de conversie Analog/Digital este realizat în jurul convertorului TLC549 produs de Texas Instruments, un convertor pe 8 biþi, cu transmisie de date serialã. Acest circuit preia semnalele care sunt demodulate cu ajutorul unei diode cu germaniu (pentru a realiza un prag cât mai mic de detectie) si amplificate de etajul realizat cu un amplificator operational.

Rezultatul este convertit în semnale digitale pentru a putea fi afisate de cãtre calculator. Comunicatia cu calculatorul este realizatã prin folosirea portului paralel, în felul acesta fiind evitate nivelele diferenþiale (ca in cazul comunicatiei seriale RS 232), interfatarea fiind realizatã direct cu calculatorul. Blocul generator de semnal contine si un amplificator de semnal, care realizeazã o amplificare în tensiune necesarã în cazul circuitelor pasive care prezintã o anumitã atenuare. De asemenea pentru circuitele care necesitã un semnal mic, a fost inclus si un atenuator în scalã, având diferite valori predefinite: -40, -20, 0 dBm, raportatã la semnalul de referinþã de 1mW/50 ohmi.

4. Realizarea prototipului

Aparatul funcþionează cu ajutorul unui soft de calculator specializat, vizualizarea datelor ºi a rezultatelor finale realizându-se tot pe ecranul PC-ului (vezi figura 3). În figura 3 este prezentatã caracteristica unui filtru de bandã foarte îngustã realizat cu un cuarþ.

Programul are de asemenea posibilitatea de a salva datele obþinute sub forma unei imagini de tip jpg utilã în diverse alte aplicaþii / prezentãri.

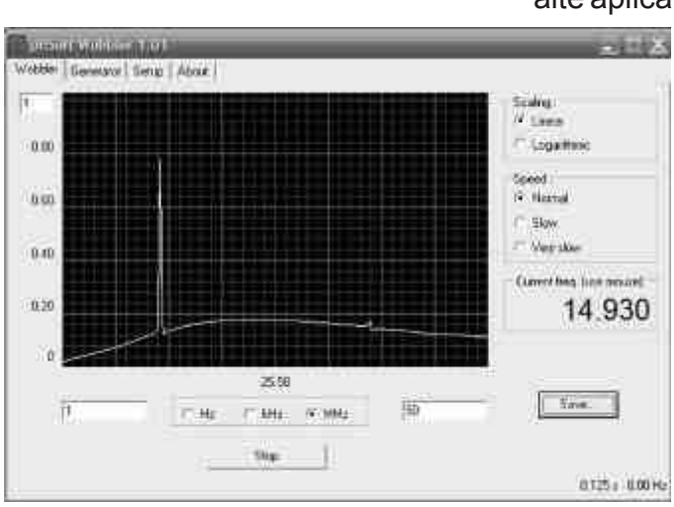

Figura 3. Interfaþa graficã de comandã ºi afiºare a Wobbler-ului

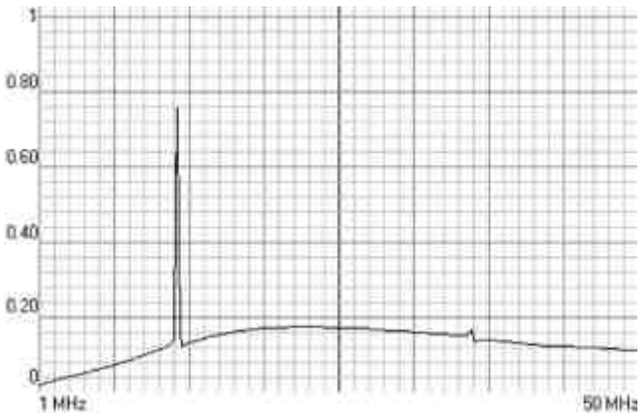

Figura 4 – Rezultatul grafic din figura 3 sub forma unui fiºier jpg

Prototipul cu alimentare independentã la reþeaua electricã de 230Vac, a fost multiplicat într-o producþie de serie micã la UPB - CETTI (vezi figura 5) care se conectează la orice PC cu performanþe modeste prin intermediul portului paralel.

Fig. 5- Produsul final

In figura 6 este prezentat aparatul cu modul de realizare practica internã .

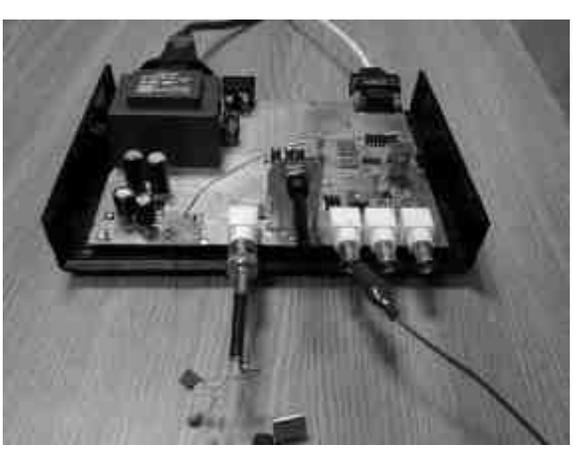

Fig. 6 - Realizara internã a produsului

Bibliografie:
1. http://www.analog.com/en/rfif-components/direct-digital-synthesis-dds/
2. http://focus.ti.com/docs/prod/folders/print/tlc549.html
3. http://www.qsl.net/om3cph/

RESEARCH AND TESTING INFRASTRUCTURE OF THE HYDRAULICS AND PNEUMATICS RESEARCH INSTITUTE- INOE 2000 IHP

INFRASTRUCTURA DE CERCETARE SI TESTARE A INSTITUTULUI DE CERCETARI PENTRU HIDRAULICA SI PNEUMATICA- INOE 2000 IHP

Dr. ing. Petrin DRUMEA* and Dr. ing. Corneliu CRISTESCU*

*Hydraulics and Pneumatics Research Institute- INOE 2000-IHP Bucharest, ROMANIA, ihp@fluidas.ro, cristescu.ihp@fluidas.ro

Abstract: *In the paper are presented the capabilities of scientific research and technological development of INOE 2000 IHP in the field of hydraulics, pneumatics, centralized lubrication, sealing, mechatronics, servo control and ecology and it is emphasized the importance of the development of test and research laboratories, including their accreditation. There are presented the main laboratories created and developed within the institute for providing the research infrastructure required for participating at the European research programs, on one hand, and, on the other hand, for adapting the activity developed by the institute to the needs of the fields industry which confronts with imply high quality standards for the manufactured products, in the developing a competitive economy.*

Keywords*:* Hydraulics and pneumatics, research and development, testing laboratories, testing procedures, research infrastructure, research laboratories.

1 GENERAL PRESENTATION OF THE INSTITUTE

The Hydraulics & Pneumatics Research Institute (IHP) from Bucharest - Romania is a research, design and production unit in the field of hydraulics and pneumatics a subsidiary of the National Institute of Research & Development for Optoelectronics - INOE 2000. The institute, holding over 50 years of experience in its activity fields: hydraulics, pneumatics, servo-commands, mechatronics and ecology, and is structured on research-development divisions, research and test laboratories as well as one micro manufacturing and service base. To conduct these activities, the institute has a section of prototypes.

IHP personnel are highly qualified manpower, while its divisions hold an adequate endowment consisting of cutting-edge devices, electronic equipment and automatic adjustment and control systems and, also, the monitoring and recording on-line system in order to watch the evolution of the main functional parameters.

The main sections of the institute's research are:

- Division of servo techniques, electronics and mechatronics;
- Division of basic hydraulics;
- Division of special equipment.

In the current research, besides the theoretical aspects needed to be clarified in the institute to pay particular attention to experimental research designed to confirm the theoretical research, or showing certain performance of the components or for the equipment which are investigated.

Therefore, in the institute were developed *10 research laboratories*, specialized care needs for each area of activity of the institute, assuring thus the research infrastructure needed to operate within national and European research.

Meanwhile, in order to meet the needs of market operators, from the hydraulics and pneumatics fields, which face special requirements in terms of ensuring product quality, the institute, in collaboration with RENAR, obtained already, certificate of accreditation for 2 test laboratories and soon for the third test laboratory.

2 RESEARCH COMPARTMENTS PRESENTATION

The main sections of the institute's research are:
- Division of basic hydraulics;
- Division of special equipment;
- Division of servo techniques, electronics and mechatronics.

Further, this will be presented each research compartment

2.1 Division of basic hydraulics

This division has specialists in general use hydraulic and pneumatic equipment (valves, directional control valves, throttles, regulators, cylinders, rotary motors and hydraulic and pneumatic driving installations). This division designs and develops presses and other devices used for environmental protection, extrication equipment as well as mechano-hydraulic systems for disabled persons.

This division coordinates the activity of *four laboratories*

1. Laboratory of General Hydraulic;
2. Laboratory of Fluid Mecanics;
3. Laboratory of Hydrostatic Transmissions;
4. Research laboratory for Tribology and lubrification equipments.

2.2 Division of special equipment

This division has engineers specialized in design, development and technical support for sealing equipment and devices, for the pneumatics devices and equipments, for the irrigation systems and, also, in design of power generating systems through non-conventional methods. This division coordinates the activity of *three laboratories:*
1. Laboratory of Sealing Systems;
2. Laboratory of Pneumatic equipment;
3. Laboratory of Environmental Protection;

2.3 Division of servo techniques, electronics and mechatronics presentation

This division has specialists in servo valves, proportional hydraulics devices, control electronics devices, electro-hydraulic control systems and automation of the complex equipment that include hydraulic and pneumatic devices. By combining mechano-hydraulic equipment with electronic systems and implication of the software programs in control and adjustment of the process complex, *mechatronic systems* can be created. This division coordinates the activity of *three laboratories*:

1. Laboratory of the mechatronics and robotics;
2. Laboratory of Electro-hydraulic control equipment;
3. Laboratory of Electronics equipment.

3. RESEARCH LABORATORIES PRESENTATION

Developing capacities for scientific research and technological development of INOE 2000-IHP in the fields of hydraulic, pneumatic, centralized lubrication, seals, servo-commands, mechatronics and ecology has led to the creation, in the institute, a current research infrastructure, which allows research activities on national and European programs.
In order to create conditions for experimental research, in the institute were established *10 research laboratories*, oordonate by the departments of research, mentioned above, which covers all areas of institute specific activities.

3.1 The Research Laboratory for General Hydraulics

The Research Laboratory for General Hydraulics, figure 1 a and b, is intended to develop both applicative research works and experimental verifications of hydraulic equipments [1,2].

The laboratory is endowment with stands to be equipped with data acquisition, with transducers for pressure, flow, temperature, speed, moving.

This endowment make successful research work and experimental verifications for hydraulic equipments. In laboratory are achieved applicative researches regarding the processes and phenomena which appear in operation of typical elements and equipment in the field of the hydraulics drives and the hydraulics machines (pumps and engines), flow adjustment devices, pressure adjustment equipments, distribution elements and auxiliary equipments (filtration and oil conditioned, etc.)

Also, in laboratory are made experimental verifications and static and dynamic functional testing of the specifical elements and equipments of field, such as:

- checking volumic efficiency of pumps with radial pistons and geared pumps;

- checking adjustability and obtaining the adjustment pressure at pressure restriction valves;

- checking the internal flow losses in the restrictive sense at way valves;

3.2 The Research Laboratory for Fluid Mechanics

The research Laboratory for Fluid Mechanics, figura 2a si b, is intended the following:

- measuring contamination of working fluids used in industrial fluid power applications;

- measuring characteristics of working fluids used in industrial fluid power applications (viscosity, temperature);

- measuring flow in circular pipes under pressure with different types of devices (flow sensors, flow transducers, diaphragms, etc.);

- checking interior and exterior tightness at hydraulic cylinders;

- checking functional scheme and feature differential pressure - flow at directional control valves;

- checking adjustability and determination of features flow - stroke at throttles.

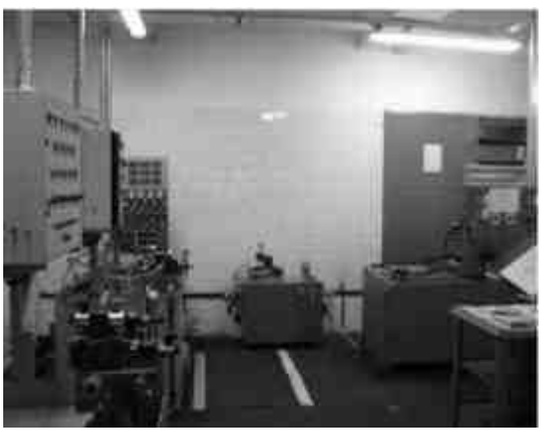

a)

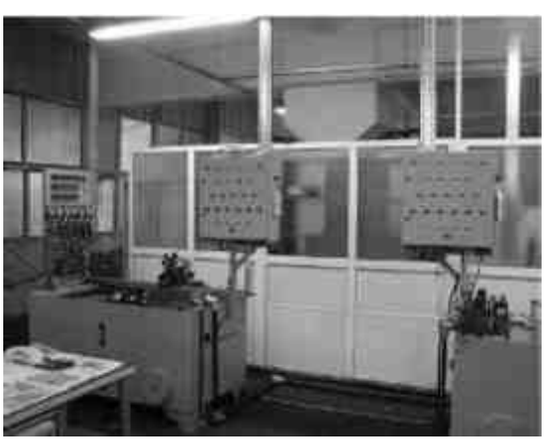

b)

Figure 1 - The Research Laboratory for General Hydraulics

- checking equipment for measuring pressure in fluid power systems;

- measuring the speed of drainage in pipes of circular section;

- measuring switching forces in some distribution equipment;

- determining the average rate of leakage in pipes of circular section

a)

b)

Figure 2 - The Research Laboratory for Fluid Mechanics

3.3 The Research Laboratory for Hydrostatic Transmissions

In the Research **Laboratory for Hydrostatic Transmissions,** figure 3 a si b, are made researchs in the field of hydrostatic transmission, in order to optimize them with a view to functional and energetic efficiency.
Also, the laboratory performs a range of verification and functional tests, static and dynamic parameters for the determination of transmission and functional evaluation of their performance [1,2]. The laboratory is proficient in the field of rotating hydrostatic transmission, with or without recovery systems for energy, which are included in fixed equipment (industrial) and mobile equipment (hauled vehicles and motor vehicles), including their subsystems, for which the following verification and
functional tests are performed :
- verifications and functional tests, static and dynamic;
- simulations of specific schemes of work for various equipments;
- tests for determining performance parameters of various sub-components of the equipment that use a hydrostatic transmission for actuation or propulsion power.

a)

b)

Figure 3 - The Research Laboratory for Hydrostatic Transmissions

3.4 The Research Laboratory for Tribology And Lubrication Equipments

The Research Laboratory For Tribology And Lubrication Equipments, figure 4 a si b, is meant for research in the general field of tribology, especially for the systems and equipments centralized lubrication, that are important for the security of technological systems. Laboratory performed a range of checks and functional tests, static and dynamic. The laboratory has modern equipment, appliances and devices of the latest generation, technical computing performance, pumping electro-hydraulic groups, and aggregates of lubrication, oil filtration units, devices for measuring and

recording parameters functional, stand proof of specific equipment Centralized lubrication.
In the laboratory there is an electro-mechanical-hydraulic *testing device* for bearings and radial sealing, enables the development of research for industrial applications.
Also, a *second device,* an electro-mechanical-hydraulic device, allows the experimental research of the frontal bearings and sealing for industrial applications.
The laboratory has a number of functional panels, for the main systems of centralized lubrication, namely for volume dosing systems, progressive dosing systems, the lubrication systems with two lines, the recirculation system, the micro lubrication systems and spray lubrication systems..
These functional panels materializing, small scale, the lubrication systems of the machines and technological equipment from the industry, and can be used for testing for specific lubrication components, for the training activities in the lubrication field, and, also, for functional demonstrations of the main/based lubrication systems.

3.5 The Research Laboratory for Sealing Systems

In the **Research** laboratory **for Sealing Systems,** figure 5 a and b, are being conducted the research in the field of sealing elements and working fluids.

The main directions of the research are:

- research on influences and compatibility between the application and technical possibilities of sealing elements, relationships between profiles, seats, fluids, working speed, material, roughness, pressure, temperature, etc.

- research on the use of novel sealing materials, new sealing profiles, sealing under conditions imposed by non-typical parameters (pressure, working speed, non-standardized size), sealing without contact, sealing with magnetic fluids [1];

- research on development of sealing required by European environmental standards and solutions for environmental action systems in the event of damage.

a)

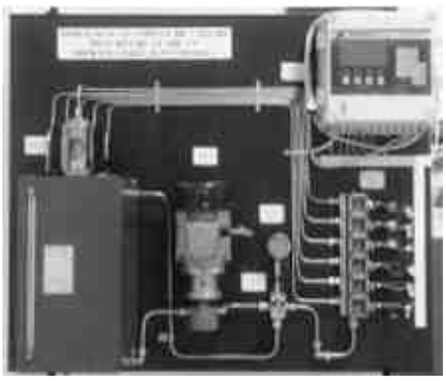

b)

Figure 4 - The Research Laboratory For Tribology And Lubrification Equipments

a)

b)

Figure 5 - The Research Laboratory for Sealing Systems

3.6 The Research Laboratory for Pneumatic Equipment

The Research Laboratory for Pneumatic Equipment, figure 6 a si b, is intended to carry out research and applied activities in the fields of [1]:
A. Classic pneumatics
B. Intelligent pneumatics
C. Fields of interference with other research areas of high priority at present where pneumatics is involved (medicine, robotics, environment).
Areas of regulation and assessment of the categories of laboratory tests carried out: 1. European Community Directive 97/23/EC - Pressure Equipment
2. European Community Directive 98/37/EC - Industrial Machinery

a)

b)

Figure 6 - The Research Laboratory for Pneumatic Equipment

3.7 The Research Laboratory for Environmental Protection

The research directions of **the Laboratory**, ***figure 7 a and b, are***:

- monitoring water quality of irrigation sources with data transmission via GSM; - technical solutions to capitalize rainfall water for irrigation in greenhouses;

- system for measuring parameters of air pollution in samples from air infested with exhaust gases (i monitoring micro station type Environment SA - France for CO, NO, NO2, NOx, optical analyzer for powder in suspension, portable, type DUST TRAK 8520 - TSI (USA); SO2 analyzer (Environment SA - France)

- installations of drop irrigation, with automatic operation, for greenhouses;

testing systems for soil and water quality

- monitoring the chemical structure of groundwater in areas vulnerable to pollution;

- modular laser systems for the actuation of the operating parts in navvy equipment type DOZER and GRADER, to perform leveling with controlled slope automatic;

- stand for testing in laboratory conditions modular laser systems (hydraulic servo mechanism for adjusting position with laser feedback), which contains two servo cylinders: one that simulates random profiles of uneven ground, the other (upon which are mounted modular system components), which simulates operation of the navvy equipment blades during the automatic operation when performing leveling in accordance with an optical reference plane, horizontal or inclined);

- hydraulic measurements to determine several specific sizes (roughness, wall thickness, flow of absorbing drain pipe, hydraulic parameters of pump stations, temperature (water, air), the depth of phreatic water.

a)

b)

Figure 7 - The Research Laboratory for Environmental Protection

3.8 The Research Laboratory for Mechatronics And Robotics

This Research Laboratory Of The Mechatronics And Robotics, *figure 8 a si b,* is design for research upon the electro-hydraulic and electro-pneumatic control equipments for improving the static and dynamic performances using a special device for detection and sensors that can be controlled with micro controller systems.
Another activity orientation of this is laboratory is the development of the intelligent direction actuated with pneumatic and hydraulic devices and the development of the pneumatic and hydraulic control systems of robots and the development of the intelligent sensors design for the hydraulic and pneumatic actuation.

a)

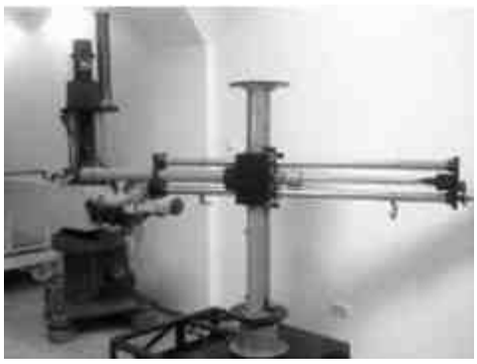

b)

Figure 8 - The Research Laboratory for Mechatronics And Robotics

3.9 The Research Laboratory for Electro-hydraulic control equipment

The research laboratory **of Electro-hydraulic control equipment** *[3]*, figure 9 a and b, is equipped with testing stands for electro-hydraulic devices as follows:

1. Testing stand of electro-hydraulic adjustment elements in static and dynamic operating schemes, with maximum flow 120 l/min and maximum pressure 315 bar.

The types of equipment under tests are: electro-hydraulic servo valves, hydraulic proportional directional control valves and hydraulic proportional valves

2. Testing stand of electro-hydraulic equipment in static operating scheme at low flow and Pmax 325 bar,Vg = 18ccm / rev; Pmax = 315 bar

The types of equipment under tests are: electrically actuated distributors RD 6, Pmax = 315 bar and hydraulic valves RD 6, Pmax = 315 bar

a) b)

Figure 9 -The Research Laboratory for Electro-hydraulic control equipment

3.10 The Research Laboratory for Electronics equipment

In the electronics laboratory, figure 10 a and b work is carried out on more specific plans: design scheme electronic / electrical computer-assisted; layout simulation, layout implementation specific electronic modules, computer-assisted, assembly and test electronic modules, blocks electric automation logic with relays or programmable logic for low voltages. Closely with the laboratory work of electronic equipment is held in the laboratory robotics and mechatronic elements, both providing support for research work developed in the laboratories of IHP. Regarding the laboratory facilities of electronic equipment, this equipment consists recent of which include: soldering stations and rework component THD and SMD; Osciloscoape with 2 or 4 channels - a working analog or digital, variable voltage sources stabilized; generator signal standard and with the possibility of arbitrary wave.
Also, the laboratory of electronic equipment has software for design, simulation and realization layout electronic modules.

a)

b)

Figure 10 - The Research Laboratory for Electronics equipment

4. ACCREDITED TESTING LABORATORIES PRESENTATION

In order to connect the Institute to industry needs, in pneumatic and hydraulic fields, which face special requirements to ensure product quality economic development in the context of competition, in collaboration with RENAR, the Institute has started the accreditation of testing laboratories.

Until now, have been accredited three testing laboratories, namely:
- The Testing Laboratory for hydraulic equipment for high and medium pressure;
- The Testing Laboratory for hydraulic equipment for high pressure adjustments;
- The Testing Laboratory for lubrication system and equipment.

4.1 The Testing Laboratory for hydraulic equipment for high and medium pressure

The Testing laboratory for hydraulic equipment for medium and high pressure of INOE 2000 - IHP, figure 11 a and b is dedicated to functional tests that will lead to achieving realistic characterization of performances of tested equipment [1,2]. The specialized stands are equipped with cutting edge devices, the generation of working fluid is performed by modern pumping modules; control and distribution equipment is included in the data acquisition system so that the working parameters can be adjusted directly by the user from within the testing application. Monitoring of functional parameters is performed using the data acquisition system that includes modern transducers to determine pressure, flow, displacement, data acquisition boards, and computing machinery. The specific testing applications are developed using TestPoint platform. It should be pointed out that to meet the requirements of European directives, the functional tests on hydraulic equipment are performed in accordance with the prescriptions inside the harmonized European standard EN SR 982 which establishes security requirements related to hydraulic and pneumatic actuation systems and their components.

The equipment which can be tested n the accredited tests are:
- Hydraulic cylinders - testing of attempt tightness interior / exterior;
- Distributing the drawer - the feature differential pressure- flow;
- Volumetric pumps with constant displacement, lock in open circuit- determination of the functional parameters in the permanent working regime, pressure, flow;
- Electro-hydraulic servo valve- the determination of static characteristic;
- One-way valves - the internal flow loss;
- Throttles-adjustmentand attempt to determine the feature race-flow;
- Batteries hydro-pneumatic body - testing to pressure resistance;

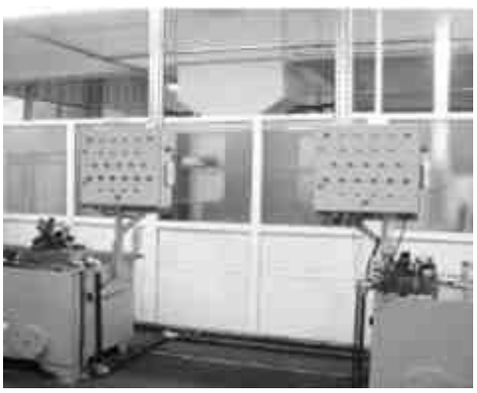

a)

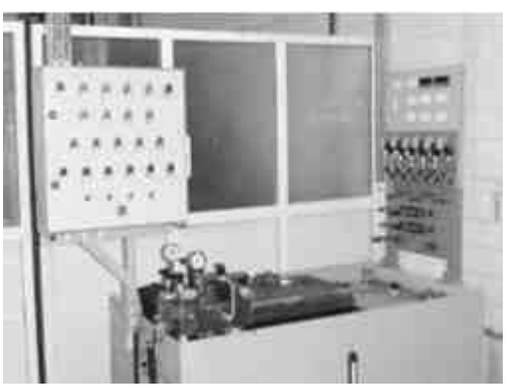

b)

Figure 11 -Testing Laboratory for hydraulic equipment for high and medium pressure

- Hydraulic distributor - functional testing of the working schema;
- Pressure valves - adjustment attempt, the characteristic curve.

4.2 Testing Laboratory for hydraulic equipment for high pressure adjustments

The testing laboratory **for hydraulic equipment for high pressure adjustments, figure 12 a and b** is designed to test the devices, components and equipment used in fluid power field [1,2]. It is equipped with: three testing stands equipped with devices and the testing annex, high precision MCAs, sensors, transducers and data acquisition systems. The stands can perform tests (for batch or endurance tests) on:
- hydrostatic rotating machinery (pumps and motors);
- hydraulic cylinders;
- adjusting and control systems (valves, directional control valves, throttles, etc.). Various devices

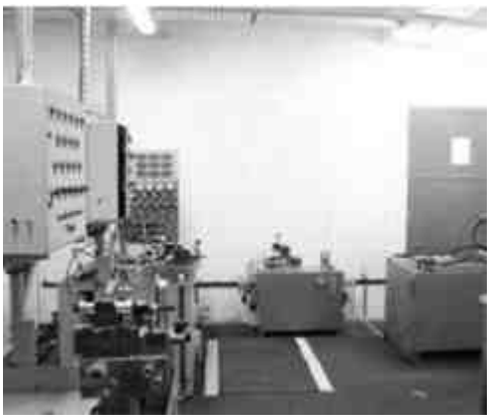

a)

b)

Figure 12 - Testing Laboratory for equipment for high pressure adjustments

4.3 The Testing Laboratory for lubrication systems and equipment

Testing laboratory **of lubrication system and equipment** figure 13 a and b following checks and perform functional test [1,2]::

- determination of the internal flow losses within the meaning of the restrictive effect of valves;
- checking adjustability and realize the pressure setting relays pressure;
- determination of the volume efficiency from the gear pumps;
- determination of the internal losses flow from the progressive dosages
- checking adjustability and realize the pressure regulating valves to limit pressure from the lubricating systems.

Verification and determinations shall be made according to procedures developed under the requirements of the standard [5] and data sheets of products subject to tests, using the laboratory facilities, including measuring devices and transducers calibrated by National Institute of Metrologie. Testing Laboratory for the systems and equipment lubrication, is in the final phase of accreditation , when is expected The certificate of accreditation.

a)

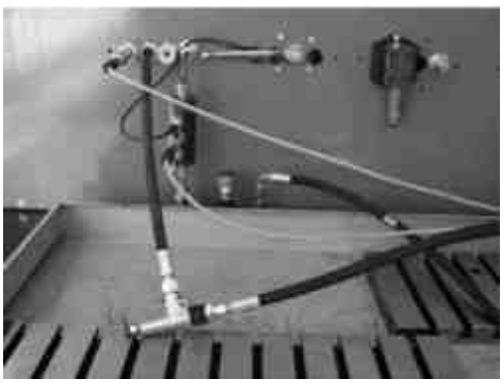

b)

Figure 13 - The Testing Laboratory for lubrication systems and equipment

5. CONCLUSIONS

In article is presented research infrastructure of the institute INOE 2000-IHP, especially for the experimental research, which consists of *10 research laboratories* and *3 testing laboratories*, the lasts being already accredited RENAR.

Besides the 3 research departments, presented above, the 10 research laboratories is the research institute base, which allows to operate both on national research programs, as well as European programs.

The 3 testing laboratories accredited to date, are the Institute interface with industry, which the institute will be conected with the operators in the hydraulics and pneumatics, face with special requirements to ensure product quality,on the competitive economic development.

REFERENCES:

[1] Avram, M., Acţionări Hidraulice şi Pneumatice. .Echipamente şi sisteme clasice şi mecatronice. Editura Universitară, Bucureşti, 2005.

[2] Sisteme hidraulice de acţionare şi reglare automată V.Marin, R.Moscovici, D. Teneslav, Editura Tehnică 1981.

[3] Vasiliu, D., Vasiliu, N., Catana, I. Transmisii hidraulice volumice, vol II. Reglarea masinilor hidraulice volumice. Editura Tehnica, Bucuresti, 1997.

[4] Tudor, I. **TRIBOLOGIE**, Editura Universităţii din Ploieşti, 2001.

[5]Standard SR EN ISO/CEI 17025:2005.General requirements for the competency of the test and sampling labs.

PORNIREA LENTĂ A ECHIPAMENTELOR DE MARE PUTERE
START SLOW OF HIGH POWER EQUIPMENT

Cosmin Tãmaº, Victor Vulpe
Universitatea Politehnica Bucuresti,
Facultatea de Electronica, Telecomunicatii si Tehnologia Informatiei
Centrul de Electronica Tehnologica si Tehnici de Interconectare
cosmin.tamas@cetti.ro

1. Introducere

Sistemul de pornire lentã este destinat echipamentelor industriale de mare putere, monofazate sau trifazate, acolo unde este necesarã acþionarea unui motor electric la momentul iniþial cu o vitezã micã, preîncalzirea ºi incãlzirea unui cuptor dupã anumite praguri de temperaturã, etc.

Circuitul este comandat ºi controlat cu ajutorul unui microcontroler din familia Microchip PIC16F676, putând fi setate diferite niveluri de protecþie la supracurent ºi supratensiune.

2. Funcționare

Pornirea lentã (Soft – Start) se bazeazã pe alternarea numãrului de sinusoide complete aplicate sarcinii. În felul acesta sunt eliminate perturbaþiile spectrale care apar în cazul variaþiei amplitudinii (modalitatea clasicã de variaþie a puterii). Schema bloc este prezentatã in figura 1.

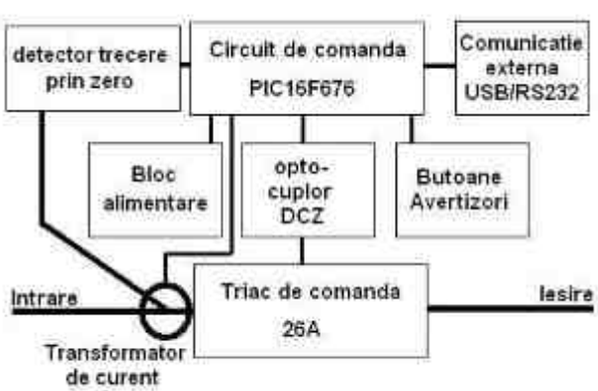

Fig. 1 – Schema bloc a dispozitivului «Soft Starter»

Schema bloc din figura 1 ilustrează modul general de realizare a SoftStart-ului. Elementul de decizie este reprezentat de unitatea microcontroler PIC16F676 [1].

Pentru sincronizarea perfectã a comenzii de tip sinusoida completã, este prevazut un bloc de « detector trecere prin zero » care realizeazã detecþia fazei ºi atunci când aceasta se aflã in zona de zero (trecerea de la o alternanþã pozitivã la alta negativã ºi invers) este generat un impuls dreptunghiular care comandã una dintre porþile de intrare ale microcontrolerului. În acest mod microcontrolerul se poate sincroniza ºi poate calcula cu exactitate frecvenþa reþelei respective. În mod uzual reþeaua din Romania prezintã o tensiune de 230Vca între oricare dintre cele trei faze ºi Nul, ºi o frecvenþã teoretica de 50Hz. În realitate, abaterile pot fi mai mari, frecventa putând sã varieze cu ordinul herþilor, fãrã a lua în discuþie ºi variatia tensiunii. În acest scop se face aceastã detecþie a trecerii prin zero.

La intrarea dispozitivului este plasat un transformator de curent, cu ajutorul caruia realizeazã protecþia la supracurent. În varianta actualã au fost implementate patru praguri de curent ce pot fi în permanenþã selectate prin intermediul celor doua butoane (pragul de 1A, 5A, 10A sau 20Amperi) .

Blocul de comunicaþie cu exteriorul este un bloc de tip serial, legatura fizicã cu calculatorul putându-se realiza prin portul serial clasic RS232 sau portul USB . Prin acest mod de comunicaþie, sarcina poate fi comandatã ºi controlatã de la distanþã; se poate defini un program software de comandã având mai multe parametri sau, intregul dispozitiv « SoftStarter » poate fi integrat într-un lanþ mai complex (de exemplu sistem de incãlzire, sistem complex pneumatic ºi actionãri mecanice, etc), fiecare unitate fiind comandatã individual printr-un port serial. Comanda sarcinii este prezentatã sub forma schematicã în figura 2.

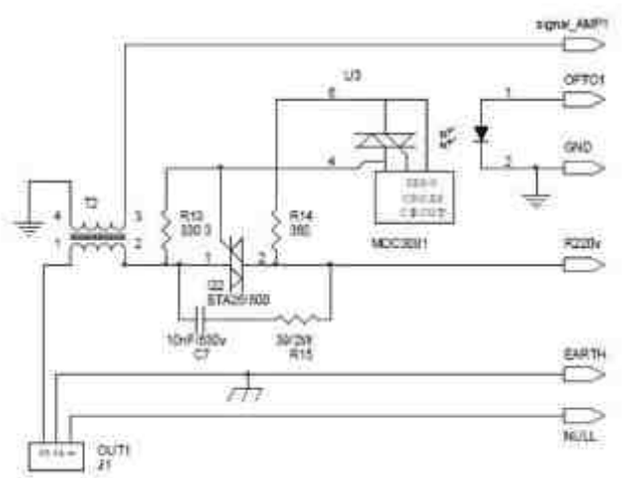

Figura 2 – schema etajului de comandã de putere

Microcontrolerul comandã partea de putere (reprezentatã prin triacul de tip BTA26/800 [3]) cu ajutorul unui optocuplor (MOC3081 [2]), care are integrat un detector de trecere prin zero. În felul acesta, pe lângã comanda iniþialã primitã de la primul detector de trecere prin zero este realizatã º i a doua verificare a poziþiei frontului, repectiv comanda se face numai pe alternanþe complete (pozitive sau negative). În acest mod se eliminã mare parte din perturbaþiile ce apareau la comanda sarcinii folosind în fond alternanþe incomplete (variind amplitudinea). Prin folosirea optocuplorului în partea de comandã, a transformatorului de curent în partea de detecþie a curentului maxim º i a transformatorului de alimentare, este realizatã separarea completã a dispozitivului de joasã tensiune (inclusiv comunicaþia cu PC-ul) de cea de înaltã tensiune.

Ultimul bloc este cel al comenzilor º i semnalizãrilor optice/acustice. Existã douã butoane, unul Verde care permite pornirea aparatului , însã, pentru a evita pornirea accidentala trebuie menþinut apasãt timp de 3 secunde. Pentru oprirea aparatului este necesarã acþionarea butonului Roºu (care actioneazã instant) . Din cele doua butoane, la pornirea aparatului se poate realiza º i selectarea treptei de puere în care va funcþiona sarcina (respectiv treapta curent de protecþie, la care se acþioneaza autoprotecþia) prin apãsarea simultanã a celor doua butoane un anumit timp.

Starea de funcþionare corectã este semnalizatã de Led-ul Verde, sau starea de Avarie de cel Roºu. Aprinderea simultanã a Led-urilor semnalizeazã selectarea unei anumite trepte de putere.

3. Produsul final

In figura 3 este prezentat produsul final “SoftStarter” in versiunea 2.1 dezvoltat º i realizat în cadrul UPB - CETTI.

Figura 3 (A si B) – produsul “Soft-Starter” versiunea ST02.01

Versiunea actualã *SoftStarter ST02.01* permite comanda sarcinii atat monofazate cât º i a celei trifazate. Produsul a fost construit într-o cutie standard folosite in tablourile electrice. Este proiectat sã postã fi folosit într-un sistem de sine stãtãtor, însã, opþional poate fi realizatã º i conexiunea cu PC-ul pentru realizarea unor funcþii suplimentare de control continuu al procesului , de monitorizare pe ecranului PC-ul al datelor în timp real provenind de la mai multe asemenea aparate, etc. Codul sursa a fost dezvoltat în C++ [4] permiþând astfel o flexibilitate º i portabilitate mãritã, sistemul putând fi cu mare usurinþã adaptat în funcþie de cerinþe.

4. Bibiografie

[1]http://www.microchip.com/ - documentatie PIC16F676
[2]http://www.fairchildsemi.com/pf/MO/MOC3081-M.html
[3] http://www.**st**.com/ -informatii BTA26/600
[4] http://ccsinfo.com/ - documentatie programarea in PIC C Compiler C++

MECHATRONIC APPROACHES OF PNEUMATIC POSITIONING UNITS

ABORDÃRI MECATRONICE ALE UNITĂȚILOR DE POZIȚIONARE PNEUMATICE

Mihai AVRAM, Valeriu BANU, Constantin BUCª AN, Despina DUMINICÃ,
Viorel GHEORGHE, LUCIAN BOGATU
Universitatea POLITEHNICA din Bucureºti

Abstract

Pneutronics has appeared naturally as a result of a synergetic binding between three fields: pneumatics – electronics –informatics. Pneutronic systems are based on the advanced theories control: the process signals become data flux which must be processed real-time using a control strategy developed after the process has been modeled and simulated as a whole. In this way pressures and flows can be controlled, the same as the actuator's movements, speeds, forces, torques and so on. The informational and energetic fluxes can be digital or analogical; same can be said for the sensors.

1. INTRODUCTION

Based on such configuration with a certain level of intelligence, a pneutronic system becomes more stable, precise and has a quicker response.

Today and its future potential puts pneumatics in a well deserved place in industry. In a recent book [1], some of the most important specialists evaluates, providing strong arguments, the bright future development for this field. To ensure this success, the main disadvantages of the working fluid must be diminished though research: low viscosity and high compressibility. Those are the main barriers that stand against building advanced precise pneumatic systems.

As shown before, more and more applications demand precise positioning, some only in specific points, and others in any point of the working range. There are different approaches for those situations. For the first category there are several existing solutions; all depends in how many stop are needed. The stop points can be the ends of the working range or intermediary points, marked by mechanical stop mechanisms. Once the stop points number rises, the positioning becomes more and more difficult. There are several special motors that can deal with this problem, but they had a low penetration into the market.

The problem that has not been solved yet properly is precise positioning in any point of the working range. In this context, a research project [2] that intends the developing of a number of modular rotary and linear pneumatic units' prototypes with accurate positioning is currently deployed at the National Research and Development Center for Mechatronics, in the frame of “POLITEHNICA” University of Bucharest.

2. GOALS AND STATE OF ART OF THE PROJECT

The main goal of the project is the building of three variants of pneutronic positioning units, based on an original concept. Innovations appear in the miniaturized and modularized construction, in integration of the command electronics into mechanical structure, in the software that controls the unit, which is easy to use, highly adaptable. Further, dedicated applications will be designed and manufactured for the above pneutronic systems.

Project's secondary objectives are the following:

? raising the level of knowledge in the field of accurate pneumatic systems designed in an mechatronic approach - the electronic components being integrated into the mechanical structure and governed by software;

? theoretical and practical research regarding the structure of pneutronic units; identifying the proper original structures which will be developed;
? designing and manufacturing the experimental models - experimental testing - designing and manufacturing prototypes - patenting solutions.
At the beginning of the design stage, three principle solutions were considered:
? A positioning unit, which has among the usual equipments (rotary or linear pneumatic actuator, a positioning sensor, proportional distribution equipment) sensors which monitor the perturbation factors;
? A incremental positioning unit with a special custom design motor, which enables the incremental movement of the load. The position sensor is no more a crucial component, thus the unit can work without it in a open loop fashion.
? A pneumo-hydraulic positioning unit that assures the position control by using a hydraulic circuit governed by a proportional valve; in this way the liquid flow is accurately controlled. The unit speed is controlled rigorously and full stop is achieved by blocking the hydraulic circuit.
Based on these principle solutions, a number of original designed positioning units were already built and can be found in the laboratory of Accurate Driving Systems and Robotics from the Chair of Mechatronics and Precision Mechanics, “POLITEHNICA” University of Bucharest. Control algorithms and software are currently developed and implemented, in order to assure increased positioning accuracy.

3. VARIANT I - PNEUTRONIC POSITIONING UNIT INCLUDING SENSORS FOR THE MONITORING OF PERTURBATION FACTORS

A first variant of pneutronic positioning unit was based on a design that included sensors for the monitoring of perturbation factors.
The connection diagram of this variant is presented in figure 1. The developed experimental model is presented in figure 2.

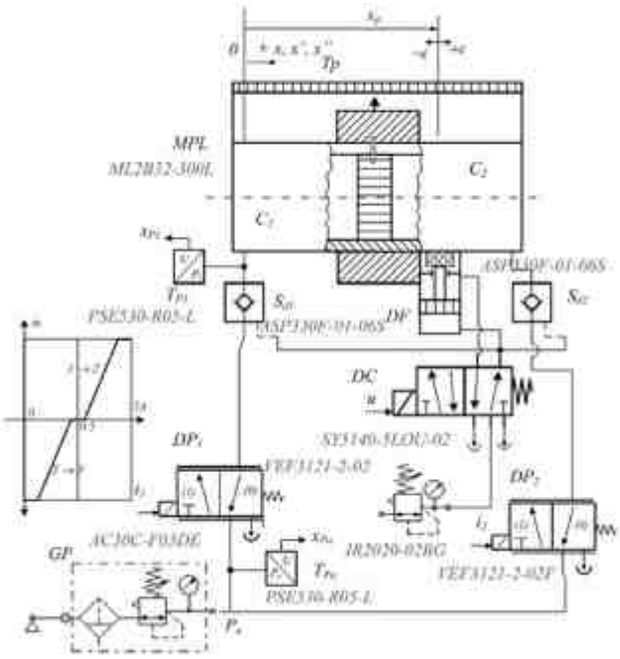

Fig.1. Variant I - Connection diagram

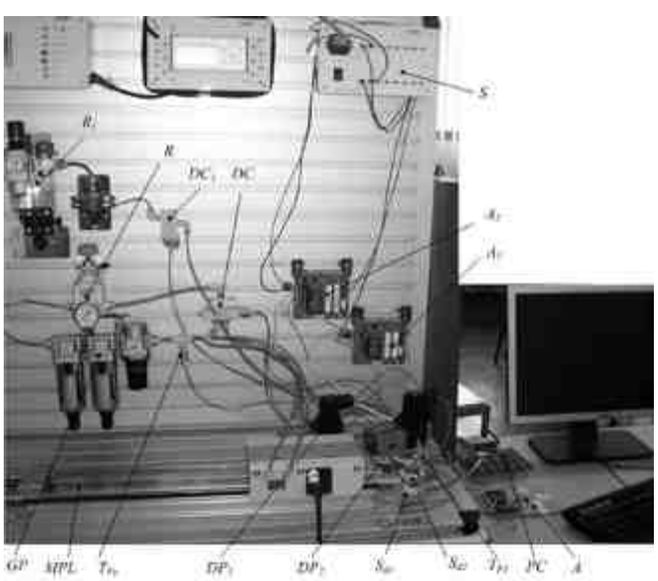

Fig.2. Variant I – Physical Model (Model I)

The following notations were used: *MPL* – Linear pneumatic motor; T_p – Position sensor; DP_1, DP_2 – Proportional pneumatic direction control valves 3/2; *DF* – Braking device; Sd_1, Sd_2 – Unlockable speed controllers with pilot check valves; TP_a, TP_1 – Pressure sensors; *GP* – Modular air filter/regulator; *R*, R_1 – Pneumatic pressure regulators;

DC, DC_1 – Classical pneumatic direction control valves; A_1, A_2 – Electrical amplifiers; *A* – Electronic adapter used for the supply and control of the two proportional magnets included in the construction of the two classical pneumatic direction control valves; *S* – Electrical power source.

The pressure regulator R_1 allows the independent adjustment of the pressure installed on the control circuit of the unlockable speed controllers.

In the STOP phase, the classical distribution control valves *DC* and DC_1 (fig. 3) find themselves in the preferred position in which the incorporated braking device is locked and the control signal of the check valves is null. The programmed position is thus maintained. In order to displace the load, the magnets of the two valves *DC* and DC_1 have to be supplied as well as one of the two proportional magnets integrated in the construction of the proportional direction control valves DP_1 and DP_2. Due to the fact that the only one magnet is supplied, the flow section inside the other valve is equal to the nominal section.

4. VARIANT II – INCREMENTAL PNEUTRONIC POSITIONING UNIT WITH CUSTOM DESIGN MOTOR

A second variant of pneutronic positioning unit featured a special custom design motor, enabling the incremental movement of the load.

The connection diagram of this variant is presented in figure 3. The following notations were used: *MPPP* – Pneumatic stepper motor; D_1, D_2, D_3 - Proportional pneumatic valves 3/2; C_1, C_2, C_3 – Pneumatic microcylinders with profiled rod; *C* – Cam; *P* – The pitch thread of the transformation mechanism.

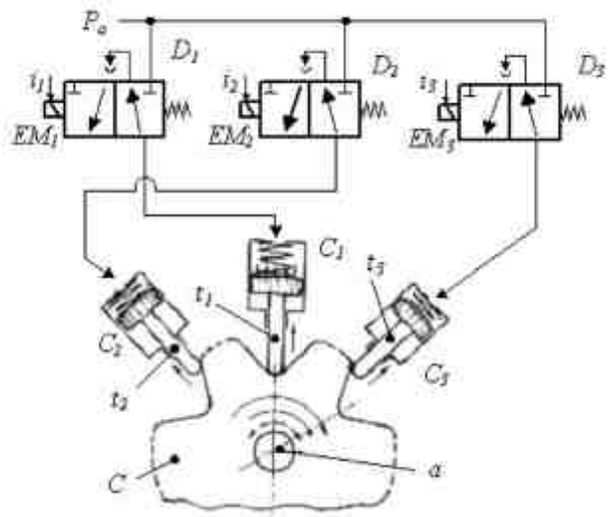

Fig.3. Variant II – Connection Diagram

The construction and functioning of the custom design stepper motor can be understood from figure 4, where its virtual model is presented. As shown in the exploded view, the distribution block 1 features a switch board and three electro distributors (one for each phase). The cam followers 2 are directly connected to the pistons (execution elements). The motor includes also the cylinder block 3, the rotor 4, consisting of a multiple cam and the exit shaft, and the cover 5 with included bearing for the shaft.

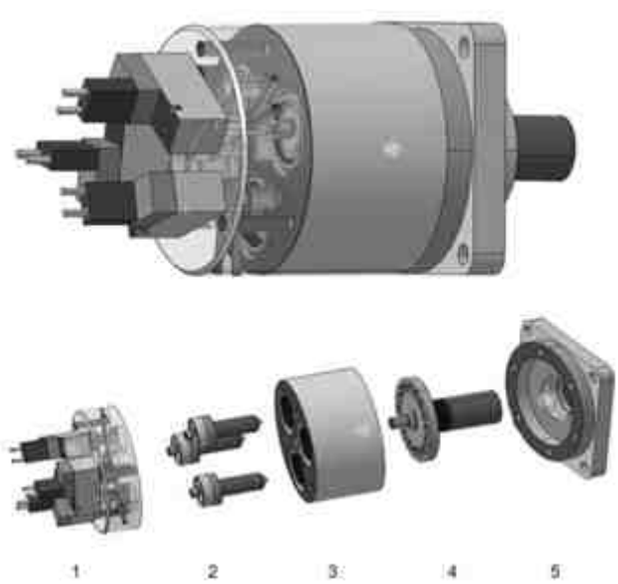

Fig.4. Variant II – Virtual Model of the Stepper Motor

The physical model based on these designs is presented in figure 5. The following subassemblies can be noticed: the translation unit (positions 1…6), the modular air filter/regulator 7, of type *AW30-F03DE*, manufactured by SMC, and the control unit, that contains the electronic unit 8 (programmable controller *CPM2A-30*, manufactured by OMRON) and the panel on which control knobs 9 are placed.

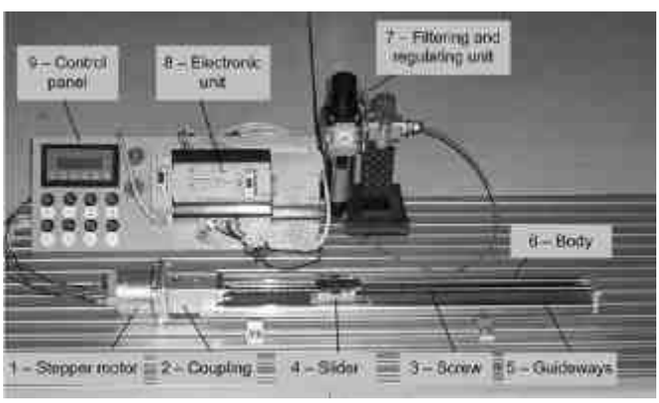

Fig.5. Variant II – Physical Model (Model II)

5. VARIANT II – INCREMENTAL PNEUTRONIC POSITIONING UNIT WITH CUSTOM DESIGN MOTOR

A third direction of research was focused on the development of an accurate pneumo-hydraulic unit controlling the position via a hydraulic circuit governed by a proportional valve. The connection diagram for this solution

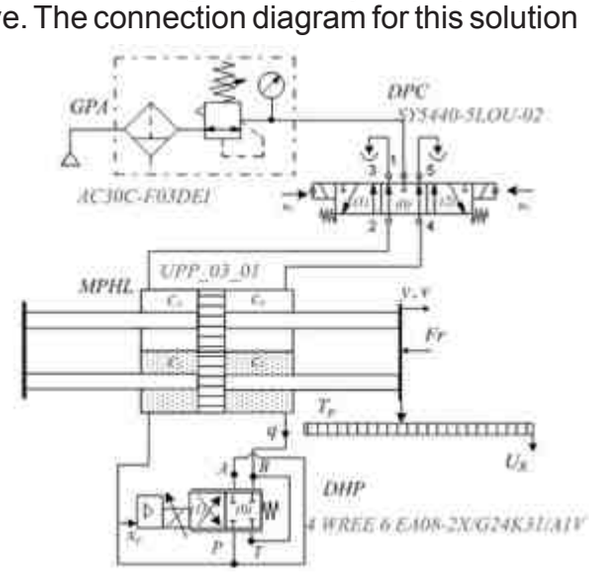

Fig.6. Variant III – Connection Diagram

The following notations are used: *MPHL* - Linear pneumo-hydraulic motor; *DHP* – Proportional hydraulic valve; *DPC* – Classic pneumatic valve; T_p - Position sensor; *GPA* - Modular air filter/regulator.

Starting from this design, three experimental models were physically built.

In the case of the first one, labeled *Model III.1* and presented in figure 7, the linear pneumo-hydraulic motor was obtained by putting the pneumatic driving cylinder with incorporated position sensor *CE1B40-500* in parallel with the control hydraulic cylinder *CHD2FWB40B-700A*.

The classical pneumatic direction control valve *SY5440-5LOU-02* was mounted directly on the sleeve of the pneumatic motor.

The hydraulic control subassembly consisted of the hydraulic motor with bilateral rod and the hydraulic proportional throttle *4 WREE 6 EA08-2X/G24K31/A1V*, mounted on the connection way between the two motor chambers using the support *S*.

The two subassemblies (pneumatic and hydraulic) were mounted with the two longitudinal axes parallel on the common support *S*. A flange union *B* was used for the stiffening of the two rods.

The whole assembly was mounted on a base plate *PB*.

Specialized I/O modules manufactured by National Instruments allowed the interfacing with the PC.

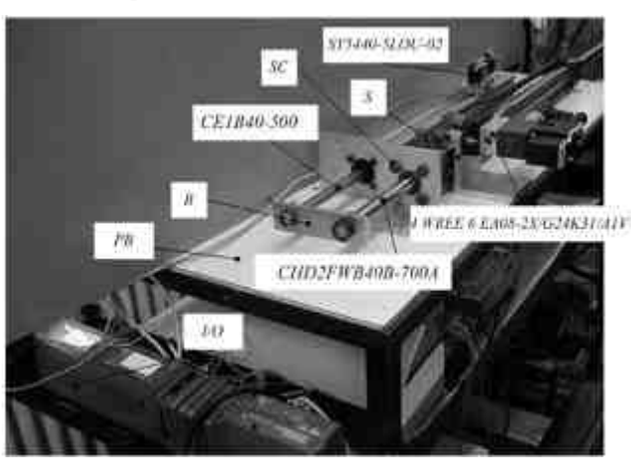

Fig.7. Variant III – Physical Model (Model III.1)

The *Model III.2*, shown in figure 8, differs from the previous due to the fact that the rods of the pneumatic and hydraulic cylinders are mounted in continuation and coupled via a special system *SC* that includes a spherical joint for the compensation of contingent deviations caused by non-coaxiality.

The third experimental model, presented in figure 9 and labeled *Model III.3*, features an original construction of pneumo-hydraulic motor integrating a incremental position sensor. The hydraulic flow control is achieved via a proportional hydraulic equipment *DHP* driven by an electronic amplifier *AE*, both manufactured by Festo. Specialized I/O modules connected to the system via the connection strip *R* allow as previously the interfacing with the PC.

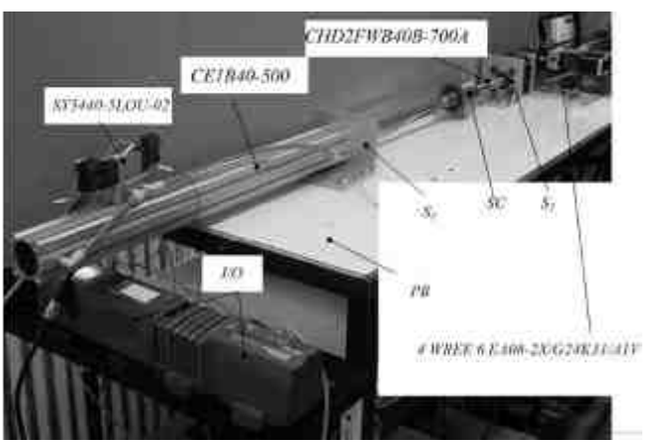

Fig.8. Variant III – Physical Model (Model III.2)

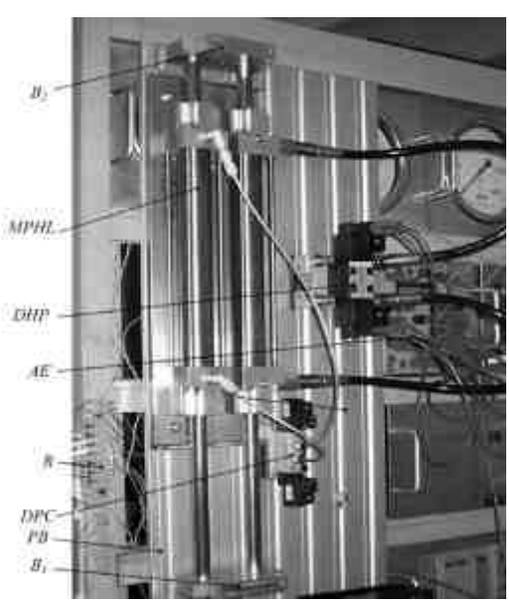

Fig.9. Variant III – Physical Model (Model III.3)

6. CONCLUSIONS

All the developed experimental models were subjected to various tests, in order to monitor their functioning and to establish the main functional parameters.

The behavior of the variants I and II corresponded to the design specifications, fact that recommended them for further development.

The tests showed that, in the case of the variant labeled *Model III.1*, an eccentric resistant force created by the hydraulic control circuit subjected the guideways of the two motors to serious efforts, leading to the jamming of the mobile assembly. In the case of *Model III.2*, the coaxial mounting of the two rods helped to avoid this phenomenon. Even if the rods of *Model III.3* were also mounted in parallel, stiffening via flange unions B_1 and B_2 was possible due to their bilateral construction, thus correct mounting allowed appropriate functioning.

Consequently, only variants *I*, *II*, *III.2* and *III.3* proved to be valid. Further research will tackle the developing of original control algorithms and software in order to increase the positioning accuracy.

REFERENCES

[1] Vogel, G. (editor), “L'univers fascinant de la pneumatique”, Hope International Communications, Freiburg, 2003.

[2] Research Project no.71-090/2007 “Modular rotary and linear pneumatic units”, 2007-2009.

[3] Avram, M., “Hydraulic and Pneumatic Actuation – Classical and Mechatronic Equipment and Systems” (in Romanian), Editura Universitarã, Bucharest, Romania, 2005.

[4] Belforte, G., Bertetto, A.M., Mazza, L., “Pneumatico – curso complete”, Techniche Nuove Publishing House, Milano, Italy, 1998.

LABORATORY FOR TESTING OF THE COMPONENTS AND LUBRICATION EQUIPMENTS

LABORATOR PENTRU TESTAREA DE COMPONENTE SI ECHIPAMENTE DE UNGERE

Dr. ing. Corneliu CRISTESCU* and Dr. ing. Petrin DRUMEA*

*Hydraulic and Pneumatics Research Institute- INOE 2000-IHP
Bucharest, Romania
cristescu.ihp@fluidas.ro ,ihp@fluidas.ro

Abstract: *In this paper it is presented the importance of the lubrication systems and equipments for providing reliability and optimum functionality of the machines and equipments and it is mentioned the imperative need for providing and maintaining quality and performances of the lubrication parts and systems. It is presented the new laboratory for testing lubrication systems and equipments from INOE 2000 IHP which is going to be accredited soon as well as the methodologies and the test stand.*

Keyword: testing laboratory, lubrication systems, accredited laboratory, quality standards

1. INTRODUCTION

The lubrication equipments have known in the latest years a special development, as a result of understanding the need for lubrication in the industrial processes and of applying ney concepts of tribology. The progress recorded in the wear, friction and lubrication calcula have led to new cocepts regarding the lubricant transport systems at the lubrication point, which, beside the principle scheme must allow a precise dosage in terms of volume, frequency and time. In these situations are taken into account from the beginning the real needs of the equipment and the operational circuits are dimensioned for each lubrication point.
A lubrication system represents a complex structure, capable to transport the lubricant in the friction and wear area and, eventually, to carry it back to the storage basin. Beside this the system provides the refreshening, cleaning and maintaining the lubricant at a normal temperature.

By means of specific elements must be provided a lubrication control and monitoring of the way the system works. Monitoring the work of a lubrication system consists of a set of techniques and means which provide collecting data from the lubrication system which are then displayed and processed. The display of the functional parameters (pressures, flows, speeds, time, etc.) may be made by means of classical elements or by means of modern computers.
The main lubrication systems are:

- The recalculating lubrication system the lubricant after lubricating the area where appears friction turns back to the system. In this way the lubricant can recalculate, being provided a minimum consumption.
- The lubrication system with total loss, - the lubricant is sent periodically or permanently in the area effected by friction, which means that it can not be recovered
- The individual lubrication system - the lubricant is sent to a single friction point
- The centralized lubrication system the lubricant is sent in two or more friction points in the same time
- The specialized lubrication system in this case lubrication is performed using physical phenomena like: capillarity, adherence, centrifugal force, gravity

At present the most commonly used are the centralized systems which have been continuously modernized in what regards dosage and electronic control of the lubrication processes. The most popular types of centralized lubrication are: the systems with simple line, with two lines, with multiple lines, with volumetrically dosage, with progressive dosage, with spraying and recirculation.
In the last years have appeared some specialized companies which produced modern parts for the transport, dosage and automation of the lubrication processes, which are on sale in Romania, these replacing either the worn parts of the old installations or the entire installations.
In order to maintain the standard operational parameters of the machines and equipments it is necessary to provide and maintain the quality of performance of the lubrication parts and systems, which must be checked and accredited periodically, according to the European standards existent in the field.
Due to this fact INOE 2000 IHP pursued to get the accreditation for a laboratory for testing lubrication apparatus, equipments and installations, which to be authorised and ambled to issue test reports, according with the standards in use.

2 THE ACCREDITATION OF THE LABORATORY FOR TESTING OF THE COMPONENTS AND LUBRICATION EQUIPMENTS

The accreditation of the laboratory for testing lubrication systems and equipments has been made just for certain tests necessary to be made for some key component parts of the lubrication systems, for which have been elaborated adequate methodologies, in accordance with the national and European standards in the field.
The key component parts of the lubrication systems which have been tested are: the tooth wheel pumps, pressure relays, the direction valves, progressive dosimeters and the valves limiting the operational pressure in the lubrication systems which use oil. For checking and trying these components have been elaborated the following 5 technical procedures:

1. Test the adjustability and provide the adjustable pressure at the pressure relays used in the circuits of centralized lubrication
2. Determine the internal flow losses in the meaning of flows at unidirectional valves used in the circuits of centralized lubrication
3. Determine the tightness of the progressive dosimeters used in the circuits of centralized lubrication
4. Determine the volumetric flow at pumps with tooth wheels, used in the circuits of centralized lubrication
5. Test adjustability and provide the adjustable pressure at the valves which limit pressure used in the circuits of centralized lubrication

The document of reference which represented the groundwork for elaborating the technical methodologies used at tests has been the standard SR EN ISO/CEI 17025: 2005 (1) which specifies the general requirements for having the competence to perform these tests, after standardised and non standardised methods and also after methods developed in the lab. This standard has been used in the development of the management and quality systems and also of the administrative and technical work of the lab. For developing the quality system has been used also the standard SR EN ISO 9001:2001 Systems for quality management Requirements (2)
All the tests and check ups are performed on the test stand, as is shown in figure1, which is placed the laboratory.
In what follows will be presented the object of the procedures and their referential groundwork and also some significant results.

2.1. Test adjustability and provide the adjustable pressure at the pressure relays used in the systems of centralized lubrication

The procedure aims to determine the conditions and method of checking adjustability and providing the adjustable pressure at the pressure relays used in the systems of centralized lubrication. The tests are performed on the test stand purposefully purchased, figure.2, from the laboratory.

This test is made for the lubrication equipments which use oil as lubricant.

Figure 1 Test stand

Figura 2 Test perfomed at the pressure relays

Beside the general standards mentioned [1] si [2], for elaborating the technical methodology have been also used other standards for hydraulic drives, especially for determining the methods of measurement [3], the general conditions of quality [4] and the special technical conditions of quality [5].

2.2 Determine the internal flow losses in the restrictive meaning of flow at unidirectional valves used in the systems of centralized lubrication

The procedure is used for determining the conditions and the best method for checking the internal flow losses. The tests are performed on the test stand purposefully provided in the laboratory figure 3**.** As before for elaborating the technical methodology have been used also other standards of hydraulics for determining the methods of measurement [3], for general conditions of quality [4] and for special technical conditions of quality [5].

Figure 3 Ttest the direction valves

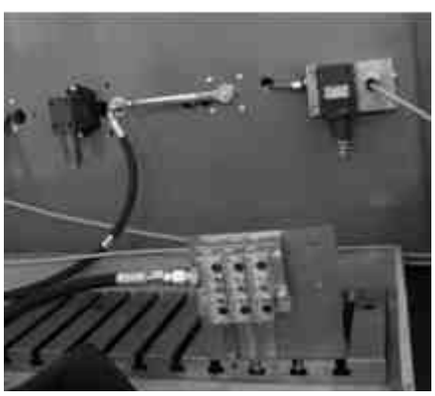

Figure 4 Test the dosemeters

2.3 Determine tightness at progressive dosimeters used in the systems of centralized lubrication

The procedure is used for determining the conditions and the method for checking tightness for progressive dosimeters. The tests are performed on the test stand which is purposefully provided in the laboratory, figure 4, and are applied at equipments which use mineral oil as lubricant.

For determining tightness at progressive dosimeters used in the circuits of centralized lubrication, the laboratory is using an original method, purposefully elaborated and which takes into account the standards in use. [3,4,5].

2.4 Determine the volumetrically output at pumps with tooth wheels used in the circuits of centralized lubrication

The procedure is used for determining the conditions and the method to be used for determining the volumetrically output at pumps with tooth wheels [6], used in the circuits of centralized lubrication.
The tests are performed on the test stand purposefully provided in the laboratory, figure 5.

Figure 5 Test pumps

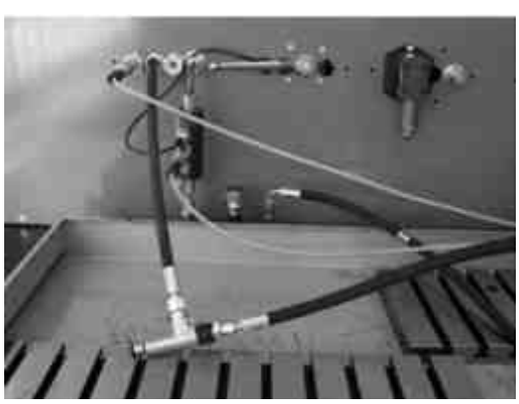

Figure 6 Test pressure valves

2.5. Test adjustability and provide adjustable pressure at the valves limiting pressure used in the circuits of centralized lubrication

The procedure is used for determining the conditions and best method to be used for testing adjustability at the valves limiting pressure in the circuits of centralized lubrication. The tests are performed on the test stand purposefully provided in the laboratory of INOE 2000 IHP, figure 6.
The test methodology which represents the subject of this paper, it is applied to the lubrication equipments which work with mineral oil.

3. CONCLUSIONS

From the information presented above results very explicitly that our institute, INOE 2000-IHP disposes of the conditions required for testing lubrication elements, systems and equipments. The technical procedures have already been elaborated for the 5 components and we are expecting to get soon the accreditation certificate from RENAR, for working in accredited conditions, in order to comply with the needs of the beneficiaries from the field.
For INOE 2000-IHP, the laboratory for testing the lubrication systems and equipments will represent a real interface with the industry lubrication equipments.

REFERENCES

[1] Standard SR EN ISO/CEI 17025:2005. General requirements for the competency of the test and sampling labs
[2] Standard SR EN ISO 9001: 2001 - "Quality management systems Requirements"
[3] Standard STAS 9817-80: "Hydrostatic drives. Main parametersi. General methods of measurement."
[4] Standard. STAS 8533-85: "Hydrostatic drives. Hydrostatic drive elements General conditions of quality".
[5] STAS 8536-85: "Hydrostatic drives. Apparatus. Special technical conditions of quality."
[6] STAS 8536-85: "Hydrostatic drives. Apparatus. Special technical conditions of quality."

SIMESIM- THE MECHATRONIC SYSTEM FOR RECOVERY OF THE LOCOMOTORY DISABLED

SIMESIM- SISTEMUL MECATRONIC PENTRU RECUPERAREA PERSOANELOR CU DIZABILITATI LOCOMOTORII

Petre Lucian SEICIU*, Ioan Dan FILIPOIU*
Tiberiu LAURIAN*, Valentin BARBU*

*Machine Elements and Tribology Department
POLITEHNICA University Bucharest
313, Spl. Independentei, sect. 6, Bucuresti, ROMANIA
lucian.seiciu@as.info.ro, http://www.omtr.pub.ro

Abstract: - *The proper design of a mechatronic system for recovery of the locomotory disabled persons (SIMESIM) have to take into account the state-of-art theretical aspects of the human walking. There aree are two main theories that are to be taken into account: "The Six Determinants Of Gait" (SDG) theory "The Inverted Pendulum Analogy" (IPA) theory. Both theories explain human walking but have shortcomings that may be resolved through a new theory: "The Dynamic Walking Theory" DWT. These theories describe more or less appropriate walking of healthy persons. The theoretical aspects presented are to be considered at the design of a mechatronic system for the locomotory disabled persons. The paper presents also a state-of-art mechatronic system for recovery of the locomotory disabled persons: SIMESIM*

Key-Words: - mechatronic system, locomotory disabled persons, rehabilitation.

1. Introduction

Walking is one of the most important features of humans. Therefore the scientific study of the human movement is mandatory both for its theoretical understanding and for medical purposes.
Walking failure leads to serious problems in fulfilling the most common daily activities such as stair climbing, sidewalk walking and street crossing leading in time to total loss of the limb control.
The mechatronic technology and virtual reality in rehabilitation proved to be promising research directions.
Several scientists showed that training reduce disabilities provoked by stroke, even if the rehabilitation takes place in the chronic phase (several months after the date of the stroke).
Theoretically, prolonged and intensive rehabilitation is needed to treat poststroke patients but the real life situation is different for most of them.
This is why virtual reality (VR) is a technology suitable for rehabilitation therapy.
VR has the capacity to simulate reallife tasks while providing the means to better measure and evaluate the patient's performance. VR also provides real-time data collection from the sensors attached to the patient's body.
These data are used for the requested feedback and for recording in databases for future evaluation.
The modern rehabilitation methods were used only in the last period at a small level, due to a lack of equipments.
The designing and assembling of the state-of-art mechatronic system (MS) presented in this paper lead the authors to the conclusion that a more thorough scientific study of the walking is needed in order to improve MS functioning.

2. Theoretical aspects

Human walking is theoretically explained by two prevailing, but contradictory theories. The first theory called "The Six Determinants of Gait" (SDG) aims to minimize the energetic cost of locomotion by reducing the vertical displacement of the body centre of mass (COM).

The second theory called "The Inverted Pendulum Analogy" (IPA) suggests that walking is a movement combination of two pendulums: the inverted pendulum for the stance leg and a direct pendulum for the swing leg. Walking efficiency is considered for these two theories in order to design properly the mechatronic system.
According to the SDG theory, the cost of transport depends on the relative proportions of single and double support. Double support is more costly than single support.
The six determinants of gait theory (Saunders, Inman, & Eberhart, 1953) is based by the model in which the gate is fragmented in six different phases due to the relative position of the legs. For example, one of the determinants is the stance phase knee flexion. The main idea is that vertical and horizontal displacements of the body center of mass (COM) are energetically costly. This leads to a set of kinematic features that help to reduce the COM displacement. Motions such as flexion of the knee during the stance phase and rotations of the pelvis are therefore coordinated so as to reduce displacements of the COM (as seen in Fig. 1) so that it follows a flat trajectory.

The analysis is made with a simple walking model presented in fig.2. COM moves at constant height h with constant speed $\vec{v}_{COM}$. The two legs produce the forces $\vec{F}_1$ and $\vec{F}_2$. The geometric variables are the height h of the COM, the step length s, and the moment arm of body weight about the knee r, all normalized by leg length. Fx and Fy are the reaction forces in the horizontal and vertical directions for the single support. $\vec{F}_1$ is the vertical force of the trailing leg during double support.
The most economical flat COM trajectory is achieved with single support dominating the step and with an instantaneous double support phase. The dimensionless positive work rate is (Kuo et al., 2007)

$$WR = \frac{s^2 \cdot f}{4 \cdot \sqrt{4 - s^2}} \qquad (1)$$

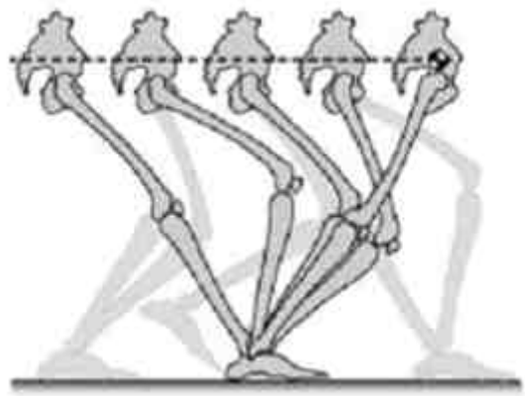

Fig. 1 The Six Determinants of Gait (Kuo, 2007)

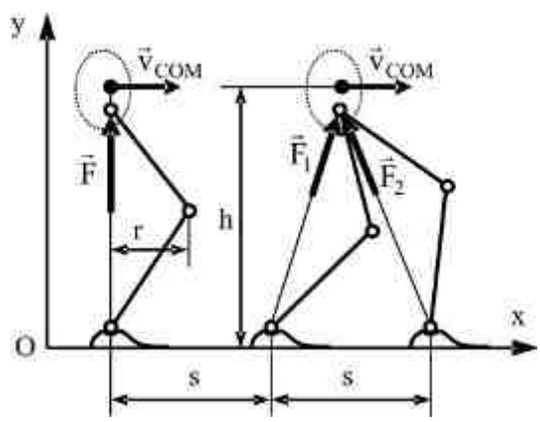

Fig. 2 Simple Walking SDG Model

The inverted pendulum theory states that the stance leg is relatively straight and supports the COM. The COM moves in a pendular arc, with no mechanical work needed to sustain the motion (Fig. 6).
The simple walking IPA model presents a different approach than SDG theory (Fig. 7). In this case, the COM is supported by a weightless leg acting as an inverse pendulum during single support. The stance leg the stance leg remains fairly straight during single support (SS), so little knee torque is needed to support body weight. In midpoint the ground reaction force is directed from the center of pressure to the COM. Along the whole length of the SS line, the COM velocity is directed perpendicular to the ground reaction force and no work is performed on the COM, which may be transported along the pendular arc with no energy input. At the same time, the swing leg moves like a pendulum and this leads to the conclusion that the energy-conserving properties of both require no work.

This is in direct conflict with the SDG theory. The pendulum analogy therefore offers multiple explanations for why walking should cost no energy whatsoever, and not why it costs any energy at all. It is therefore necessary to consider how walking deviates from pendulum behavior, and whether this deviation might cost energy.

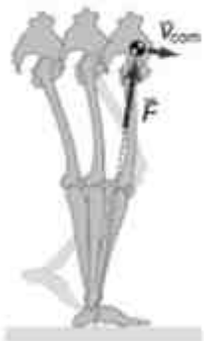

Fig. 3 The Inverted Pendulum (Kuo, 2007)

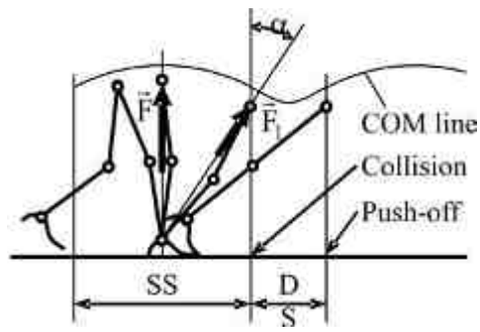

Fig. 4 Simple Walking STS Model

This model offers a strategy for reducing energy expenditure to zero which is not logical since it doesn't explain the actual energy cost of walking.

In fact the IPA model can be considered only a start model for a realistic energy efficiency walking analysis. A more realistic model is the step-to-step (STS) model, presented in Fig. 4. This model states that the energetic cost occurs only in step-to-step transitions.

The IPA theory states that the dimensionless positive work rate is (Kuo et al., 2007)

$$WR = \frac{1}{8} \cdot f^2 \cdot s^2 \qquad (2)$$

Where s is the step length and f is step frequency, normalized by the natural frequency of the leg.

The theoretical lower limit for the cost of transport (Collins et al., 2005) in walking models is $c_{mt} = 0$. This can be achieved by swaying the upper body with springs in such a manner as to totally eliminate the collision losses. Without swaying the upper body, a motion that would have significant energetic cost in humans, a rough lower bound on energetic cost can be estimated from the point-mass small-angle model

$$c_{et} \geq c_{mt} \geq J \frac{(s - s_f)^2 \cdot v^2}{2 \cdot g \cdot d \cdot l^2} \approx 0.0003 \qquad (3)$$

where J is the collision reduction factor, which is 1/4 for push-off before heel-strike, s ˜ 0.4 m is the step length , s f˜ 0.2 m is the foot length, l ˜ 0.8 m is the leg length, v = 0.4 m/s is the average velocity, and g ˜ 10 m/s2 is the gravity constant.

Another dynamical model (Kuo et al., 2002) find out that $c_{et} = 0.0003$

Other values of $c_{et} = 0.0003$ for real models (Collins et al., 2005) are presented in table 1

Cornel biped	Deft robot	MIT learning biped
0.2	5.3	10.5

Table 1. Estimated cost of transportation for various robots

Of the two important walking theories, the authors use the SDG theory to compute the work efficiency, the results being used for the mechatronic system design.

The design also must take into account some cinematic particularities that result from the use of a special developed crank-reciprocating rod mechanism.

3. The Mechatronic System

The paper presents the mechatronic system for the rehabilitation of locomotor disabled persons. The system is based on a basic training gait at which there were added several sub-systems necessary for a complex and full recovery.

The importance of the research consists in developing a state-of-art mechatronic system able to respond to the utmost complex requirements. For example, in addition to the normal walking movement (limbs opposition), the system allows, for the first time, a tandem (skier) movement: simultaneous movement of the side limbs (right hand-leg and left hand-leg).

In this respect, the system is designed and developed based on the latest achievements of human movement science, mechanisms theory, medical science and IT.

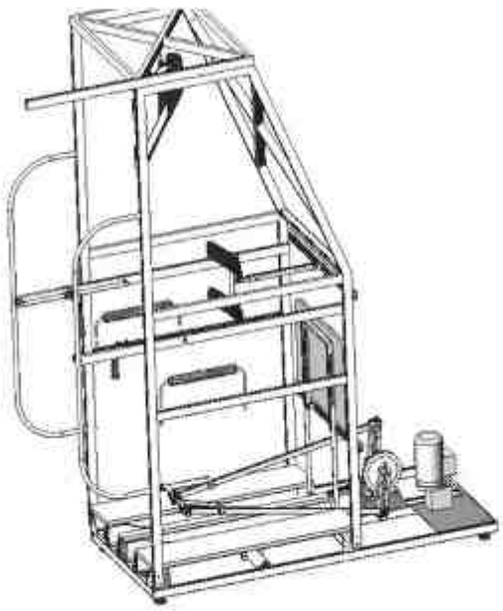

Fig. 5 SIMESIM (mechanical part).

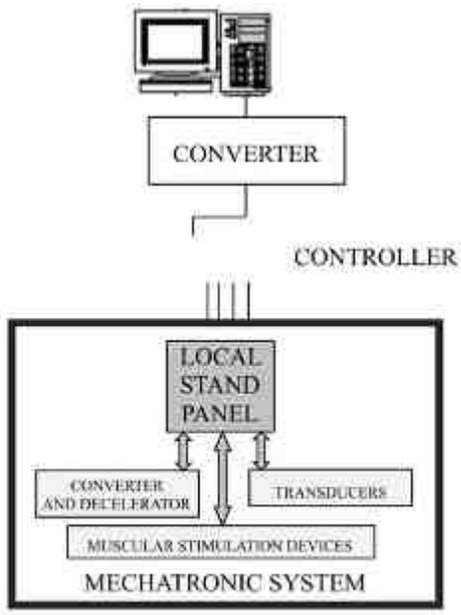

Fig. 6 The Hardware System Architecture

The system has several important parts: mechanical, electronic, measurement, control.
The mechanical part (main rig) is presented as a CAD view in figure 5. It is composed of:
1 - the patient positioning frame; 2- the feet driving module; 3 - the hand guiding system;
4 - the oscillating lift mechanism (harness, pulleys and a winch).
Figure 6 presents the hardware system architecture for three different recuperation processes.
The hardware interfaces are:
* serial communication interface between PC stand and converter;
* serial communication interface between converter and controller stand;
* process interface between controller stand and stand transducers and working elements.
Unified signals are brought by in the local screen.
The stall automated/informatics driven solution is based on an open hardware-software architecture that will allow further development of the current research, at minimum costs.
This simulation system interacts through sensor devices and driving mechanisms with the human body in order to obtain an optimum recuperation both from quality and from duration process point of view.

The system is elaborated to act in different ways based on personalized programs for each individual case, being adapted to each patient even during the recuperation period of time.
In all cases, basis elements of above mentioned intelligent systems consist primarily of the following:
- Data retrieval and command transmittal system (SCADA)
- Real-time database
- Batch database
- Infrastructural leveling interfaces
- End-user interfaces
The system frame has two operating types (regimes): automated (computer driven) and local (manual).

Figure 7 presents the software system architecture.
The main software interfaces are:
- Communication Interface between real-time database and high level batch processing database;
- Communication Interface between levels MODBUS Protocol components installed on the PC (OPC - for the Master Hub Server) and communication software MODBUS on the Controller (for the Slave Hub).

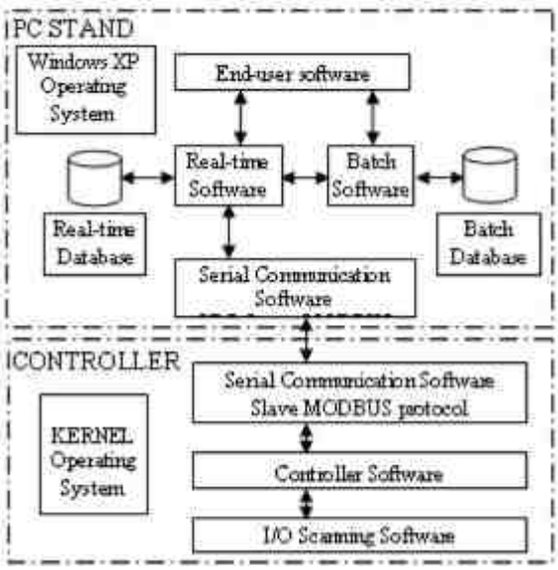

Fig. 7 The Software System Architecture

Fig. 8. Dialog graphic screen.

The system presents also several Batch Database Interfaces:

- main batch database operating screen;
- patient ID entering screen;
- patient rendering-back screen for biometric data entering;
- biometric data screen;
- patient browsing screen for file completion/checking etc.

The system has real-time database and batch database.

The system presents an end-user interface that is updated and reloaded every time it is used.

The Real-time Database Interface is done through user friendly dialog graphical screens like the one presented in Fig. 8.

4. Conclusions

Of the two important walking theories, the authors use the SDG theory to compute the work efficiency, the results being used for the mechatronic system design.

The cost of transport can be estimated easily, but the results vary largely from one application to another. The authors aim to reach low cost of transport values with the newly designed MS.

Pictures SIMESIM present state

The design also must take into account some cinematic particularities that result from the use of a special developed crank-reciprocating rod mechanism.The gait trainer enables severely disabled patients the repetitive practice of a physiologic walking movement.
SIMESIM will allow locomotory disabled subjects to practice the gait-like movement without overstressing therapists. The device simulates the phases of gait, supports the subject's weight according to their abilities, and controls the body movement in the vertical and horizontal directions.
Video analysis of gait and the kinesiological EMG will be used to assess the pattern of movement and the corresponding muscle activity. Walking on the gait trainer is characterized by a symmetrical, sinusoidal movement. In summary, the new gait trainer generates physiological gait-like movement which is important for the restoration of walking ability.

5. References

Collins, S.; Ruina, A.; Tedrake, R. & Wisse M. (2005). Efficient Bipedal Based on Passive-Dynamic Walkers, *Science Magazine*, Vol. 307, no. 5712, February 2005 p. 1082-1805, ISSN: 0036-8075

Filipoiu, I. D.; Seiciu P. L.; Laurian, T. & Carutasu, N. (2007). Mechatronic System for Neuro-Motor Disabled Persons: Computer Simulation, *Ann. DAAM proc. Int. DAAM Symposium*, Katalinic, B. (Ed.), pp. 281-282, ISBN 3-901509-58-5, Zadar, Croatia, 24-27th. October 2007, DAAAM International Vienna, Vienna

Filipoiu, I. D.; Seiciu P. L.; Laurian, T. & Carutasu, N. (2007). SIMESIM The Mechatronic System For Neuro-Motor Disabled Persons, In.: *DAAM International Scientific Book 2007,* Katalinic, B. (Ed.), pp. 387-398, DAAAM International Publishing, ISBN: 3-901509-60-7, Vienna

Kuo, A. D. (2002). Energetics Of Actively Powered Locomotion Using the Simplest Walking Model, *Journal Of Biomechanical Engineering*, ASME, Vol. 124, Issue 1, February 2002, pp. 113-120, ISSN: 0148-0731

Seiciu, P. L., Laurian, T., Filipoiu, D., Special Training Gait for Locomotion Disabled Persons, *European Workshop On Movement Science*, Sportverlag Strauß, 2006, p. 216.

Seiciu P. L., Filipoiu I. D., Laurian T., Alionte C. G, Barbu V., *Monitoring Equipment for Patients Using SIMESIM Mechatronic System*, Mecatronica, 2/2007, ISSN 1583-7653, pp.56-59. 40-43.

Seiciu P. L., Filipoiu I. D., Laurian T., SIMESIM - *Sistem mecatronic pentru recuperarea persoanelor cu handicap locomotor*, Simpozion naţional VIASAN-CEEX 2008, 28-30 septembrie 2008, Sinaia, Romania.

Seiciu, P. L., Filipoiu, I. D., Laurian, T., *Theoretical Aspects Related to the Design of a Mechatronic System for Recovery of the Disabled Persons*, Proceedings of the "9th WSEAS International Conference on Automation & Information (ICAI '08) ", Bucharest, Romania, June 24-26, 2008, ISBN 978-960-6766-77-0, ISSN 1790-5117, published by WSEAS Press, pp. 230-235.

Seiciu, P. L., Laurian, T., Filipoiu, I. D., Parvu F., *New Design Aspects of a Locomotory Rehabilitation Mechatronic System*, Annals of DAAM for 2008 & Proceedings of the 19th International DAAAM Symposium, ISSN: 1726-9679, ISBN 978-3-901509-68-1, pp.1241-1242, editor B. Katalinic, Published by DAAAM International, Vienna, Austria 2008.

Zajak, F. E.; Neptune, R. R. & Kautz, S. A. (2002). Biomechanics and Muscle Coordination of Human Walking. Part I. *Gait and Posture*, Vol.16, Issue 3, December 2002, pp. 215-232, Elsevier, ISSN: 0966-6362

Zajak, F. E.; Neptune, R. R. & Kautz, S. A. (2003). Biomechanics and Muscle Coordination of Human Walking. Part II. *Gait and Posture*, Vol.17, Issue 1, February 2003, pp. 1-17, Elsevier, ISSN: 0966-6362

SISTEME MECATRONICE COMPLEXE DE ACȚIONARE ELECTROHIDRAULICĂ

COMPLEX MECHATRONIC SYSTEMS FOR ELECTROHYDRAULIC DRIVE

Mat.ing. Gabriel RÃDULESCU*, drd.ing. Radu RÃDOI*, drd.ing. Iulian DUÞU*

**INOE 2000 -IHP*

Abstract:
The paper presents a few types of complex mechatronic driving systems such as: sequential driving of a jointed arm, speed control in rotary motion, driving of a motion bridge and primary and secondary regulation in rotary motion and also their functional characteristics.

1. INTRODUCERE

Categoria sistemelor mecatronice complexe priveºte sisteme în care acþionarea se face cu mai multe motoare liniare sau rotative comandate secvenþial electric, în tandem sau cu reglare secundarã în trepte sau continuã.

2. TIPURI DE SISTEME

Sistem de acționare secvențial tip „brat articulat”

Sistemul descris de fig. 1 este de tip „braþ articulat”, având trei centre de rotaþie acþionate, douã cu motoare liniare ºi unul cu motor oscilant fig. 1 b.

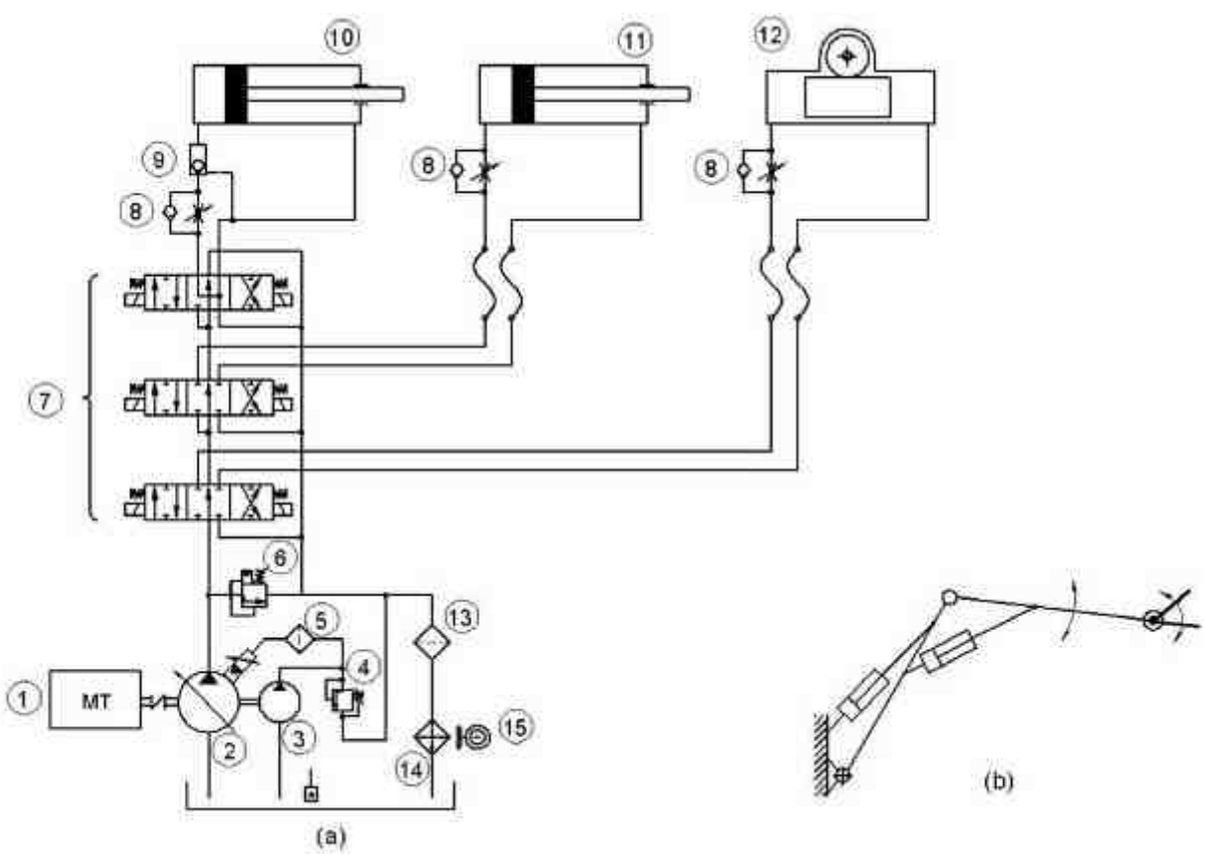

Fig. 1

1. Motor termic; 2. Pompa variabilã; 3. Pompa auxiliarã; 4. Supapa de presiune;
5. Filtru 10...15 m; 6. Supapa de siguranţã secţiunea de intrare a sistemului de distribuţie
7. Baterie de distribuitoare; 8. Drosele de cale; 9. Supapa deblocabilã pilotatã;
10,11. Cilindrii diferenţiali; 12. Motor oscilant; 13. Filtru retur 25...40 m
14. Schimbãtor cãldurã; 15. Electroventilator; 16. Senzor temperaturã

Caracteristicile funcţionale sunt:

- Motopompa are ca motor primar un motor Diessel rapid cuplat cu o pompã variabilã comandatã de un regulator de vitezã electric proporţional şi care hidraulic este alimentat de o pompã auxiliarã coaxialã celei principale
- Comanda „braţului articulat" se face printr-un distribuitor baterie în 8 canale cu centru deschis, pilotat electric, care are în componenţã o secţiune de intrare care conţine supape de suprapresiune, trei secţiuni de distribuţie şi o secţiune de ieşire.
- Sistemul de comandã electric al braţului este indiferent ca ordine de funţionare, dar schema hidraulicã impune acţionarea în ordinea înserierii secţiunilor de distribuţie.
- Volumul geometric al pompei principale ilustrat de fig. 2 poate fi comandat în buclã închisã cu un distribuitor proporţional sau redus la zero prin poziţia preferenţialã a servomotorului (2) acţionându-se distribuitorul electric (10).

Sistem de acționare în mişcare rotitoare cu gamă mare de variație a turației

Fig. 3 reprezintã schema hidraulicã în circuit închis a unui sistem de variaţie a turaţiei cu reglare primarã continuã şi reglare secundarã în trepte conform diagramei din fig 3 b.

Caracteristicile sistemului:

- Panoul hidraulic al sistemului antrenat de motor printr-o cutie de distribuţie are în componenţã pompa principalã (4) al cãrui dispozitiv de reglare este detaliat de fig. 4, pompa dublã auxiliarã cu accesoriile de protecţie şi filtrare
- Secţiunea a II a a schemei (poz. 5, 6, 7) asigurã protecţia şi rãcirea circuitului închis
- Secţiunea a III a (poz. 8,9) este sistemul de distribuţie care asigurã

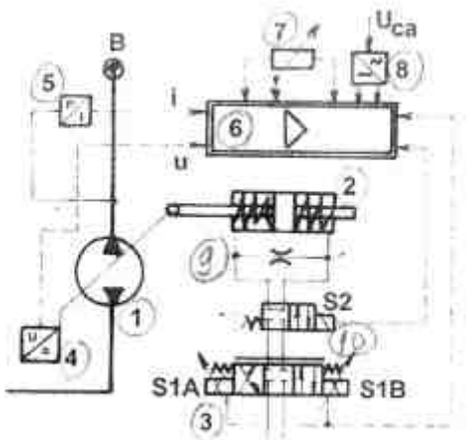

1. Pompã variabilã cu pistoane axiale;
2. Servomotor reglare volum geometric;
3. Distribuitor proporţional; 4. Traductor cursã servomotor;5. Traductor presiune;
6. Regulator electronic; 7. Potenţiometru;
8. Redresor; 9. Duza;
10. Distribuitor scurtcircuitare

Fig. 2

- Alternanţa alimentãrii motorului lent sau rapid
- Alternanţa conectãrii motoarelor la sistemul de transmisie mecanic al sistemului
- Secţiunea a IV- a (poz. 17, 18, 19) este sistemul hidromecanic de acţionare compus din motoarele propriu zise, ambreiajele de cuplare şi angrenajele conice de transmisie.
- Sistemul de automatizare are douã bucle
  - Controlul corelaţiei comandã - unghi de basculare pompã (4)
  - Controlul corelaţiei unghi de basculare pompã (4) – turaţie finalã mecanism
- Parametrii hidraulici: presiuni comandã 7 Mpa, acţionare 18 Mpa; putere 2,2 kW (la $\omega_{max} = 1{,}4\frac{rad}{sec}$ şi cuplu 18 daNm)
- Recomandarea în utilizare: mecanisme funcţionând în gamã largã de viteze unghiulare la puteri mici (N ~ 10^0 kW)

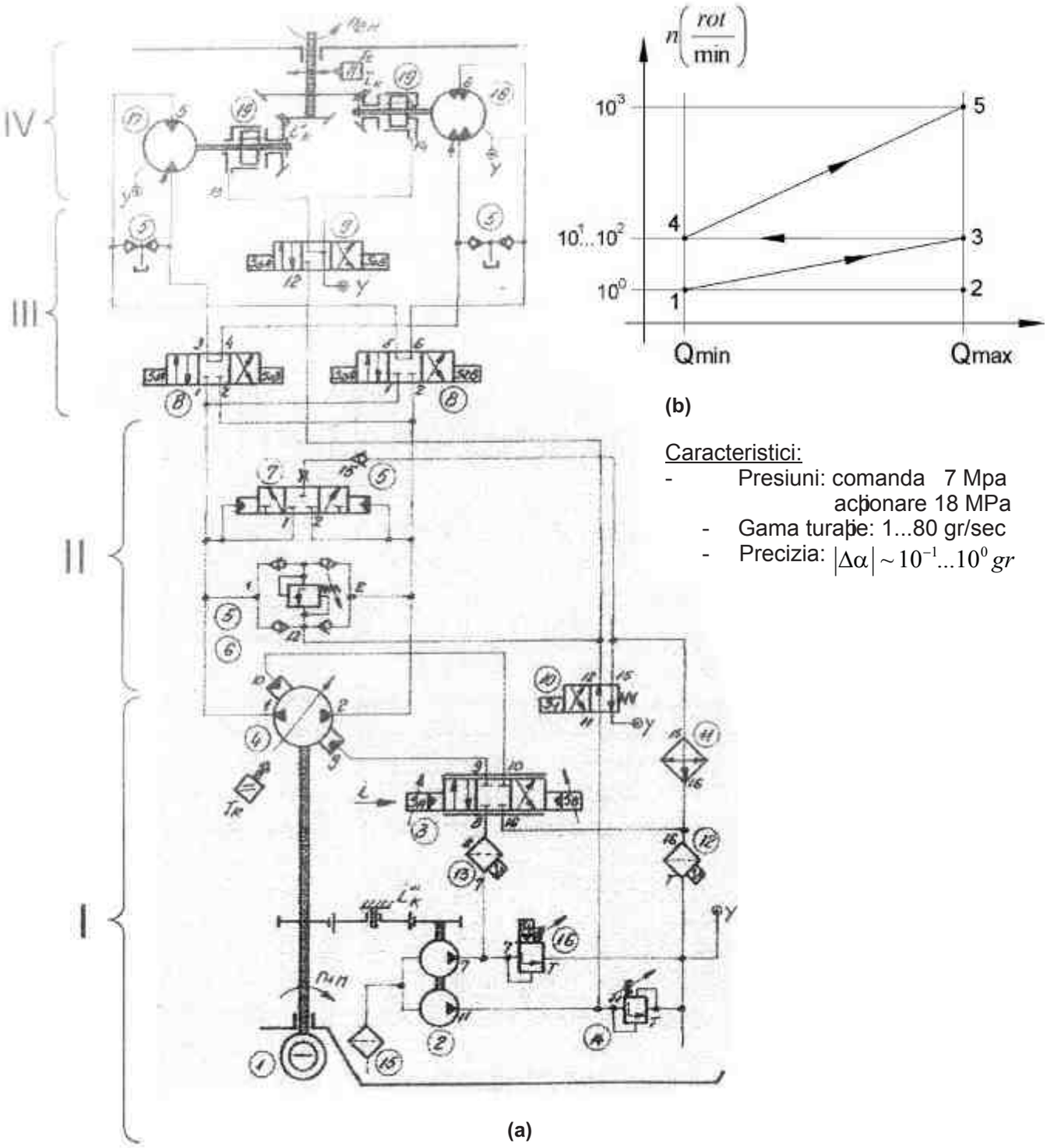

1. Motor electric 24 Vcc; 2. Pompã dublã; 3. Distribuitor proporional; 4. Pompã variabilã; 5,6,7. Dispozitiv împrospãtare protecie; 8. Distribuitoare electrice schema 04 N; 9. Distribuitor electric schema 02; 10. Distribuitor electric schema 01; 11. Rãcitor; 12. Filtru retur; 13. Filtru presiune; 14. Supapã presiune comandã directã; 15. Filtru aspiraie; 16. Supapa de presiune cu conectare electricã; 17. Motor rapid; 18. Motor lent; 19. Ambreiaje

Fig. 3

Sistem de acționare în mişcare de rotație a unei punți motoare

Fig. 4 prezintă schematizarea sistemului de acționare în punte în circuit închis cu reglarea primară a vitezei, comandat cu servovalvă cu următoarele caracteristici:

- Secțiunea de generare compusă din o pompă cu pistoane axiale cu volum geometric reglabil cu acționare hidraulică și comandă prin servovalvă și o pompă auxiliară înglobată a cărui debit este divizat de un ventil de prioritate cu favorizarea circuitului de împrospătare.
- Secțiunea de protecție îndeplinește funcțiile de protecție la suprasarcină și cavitație și funcția de răcire $a \cong 20\%$ din fluidul de lucru prin aportul pompei auxiliare și care parcurge circuitul filtrare - răcire
- Secțiunea de comandă a cuplării motoarelor la roți prin acționarea hidraulică a ambreiajelor înglobate în reductoarele planetare în regimul următor:
  - La acționarea controlerului care comandă servovalva pe oricare din circuitele A sau B se stabilizează presiunea care este selectată de (7), iar electromagnetul S este alimentat și cuplează hidraulic contra arc ambreiajele (1.1) și (1.2) permițând transmiterea puterii
  - În cazul când S nu este alimentat arborii mecanismelor de la ieșirea reductoarelor planetare se pot roti datorită unor cupluri exterioare sistemului fără a antrena motoarele (de exemplu în cazul remorcării)
- Utilizări posibile: punte motoare pentru utilaje mobile cu restricție în circulația rutieră

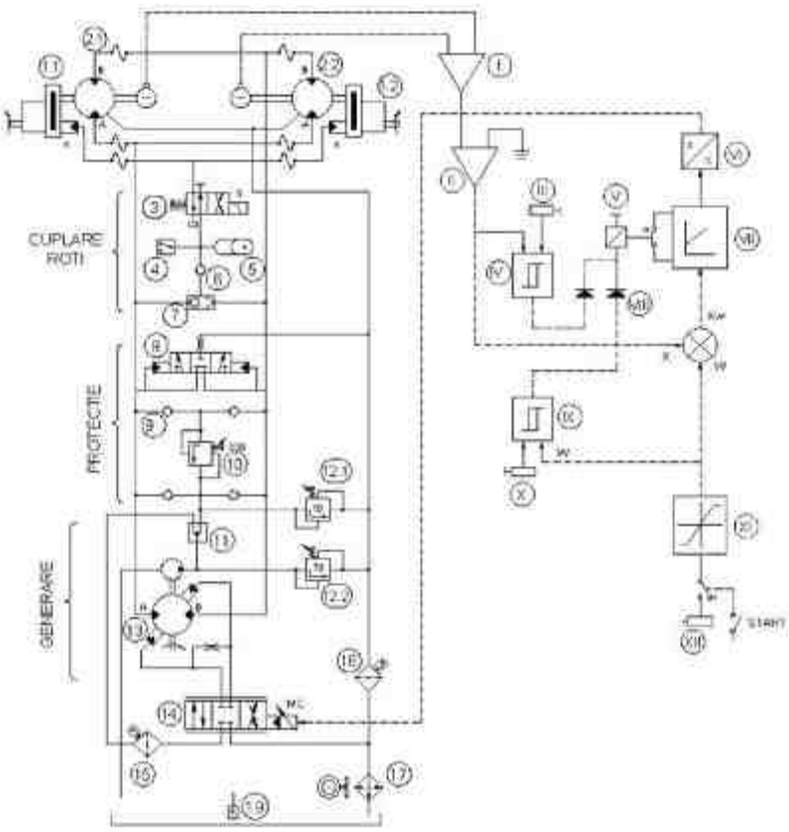

Fig. 4

Componența hidraulică: 1. Reductoare planetare cu ambreiaj încorporat acționat hidraulic (i = 20...25, M ≈ 400...500 daN); 2. Motoare rapide 40...63 cm^3/rot cuplate cu traductoare de turație; 3. Distribuitor electric; 4. Releu presiune; 5. Acumulator 3 dm^3; 6. Supape de sens; 7. Supapa de selectare; 8,9,10. Dispozitiv împrospătare protecție; 11. Ventil de prioritate; 12. Supape de presiune; 13. Pompa reglabilă; 14. Servovalva cu două etaje; 15. Filtru 5...10 m; 16. Filtru de retur 25...40 m; 17. Răcitor; 18. Ventilator; 19. Traductor de temperatură.

Componența electronică: I. Sumator; II. Amplificator - adaptor; III, IV, IX, X. Amplificator de cuplare; XI. Generator de rampă; VI. Convertor tensiune - curent; V, VIII. Regulator PI; XII. Potențiometru pentru valoare nominală.

Sistem de acționare în mişcare de rotație cu reglare continuă primară şi secundară

Fig. 5 prezintă un sistem în circuit închis cu reglarea turației proporțional electric realizând următoarele funcții:

- Generatorul are pompă cu pistoane axiale (tip A4V) cu pompă auxiliară înglobată cu reglare hidraulică, comandată hidraulic proporțional
- Pompa auxiliară debitează prin supapa de prioritate spre circuitul de răcire și circuitul de comandă al pompei principale
- Circuitele de lucru A, B și circuitul de comandă sunt monitorizate ca nivel de presiune de traductorii de presiune (1) și (2) fig 5 d care convertesc presiunile $P_{A,B}$ și P_C în tensiunile electrice care intră în subansamblul (3) în care sunt amplificate, modulate și convertite în curentul (i) care se aplică electromagnetului S_2.

Sistemul funcționează ca regulator de putere conform relației $(q_1 + q_2) \cdot p_L = ct$ care ca funcție este echivalentă unui regulator de putere care în principiu la o presiune de lucru p_L ce corespunde unui debit $Q_L = n_i \cdot q_1$ pentru care produsul $p_L Q_L$ este mai mare sau egal cu puterea maximă, curentul (i) comandă S_2 astfel ca p_c să scadă, ceea ce conduce la scăderea volumului geometric al pompei.

- Sistemul de protecție asigură evitarea suprapresiunii, a cavitației și permite evacuarea unei cantități de fluid de lucru în vederea răcirii sistematice
- Motorul variabil posedă un sistem propriu de reglaj proporțional electric în care S_1 este alimentat astfel ca să realizeze caracteristica $q_n \rightarrow i_1$

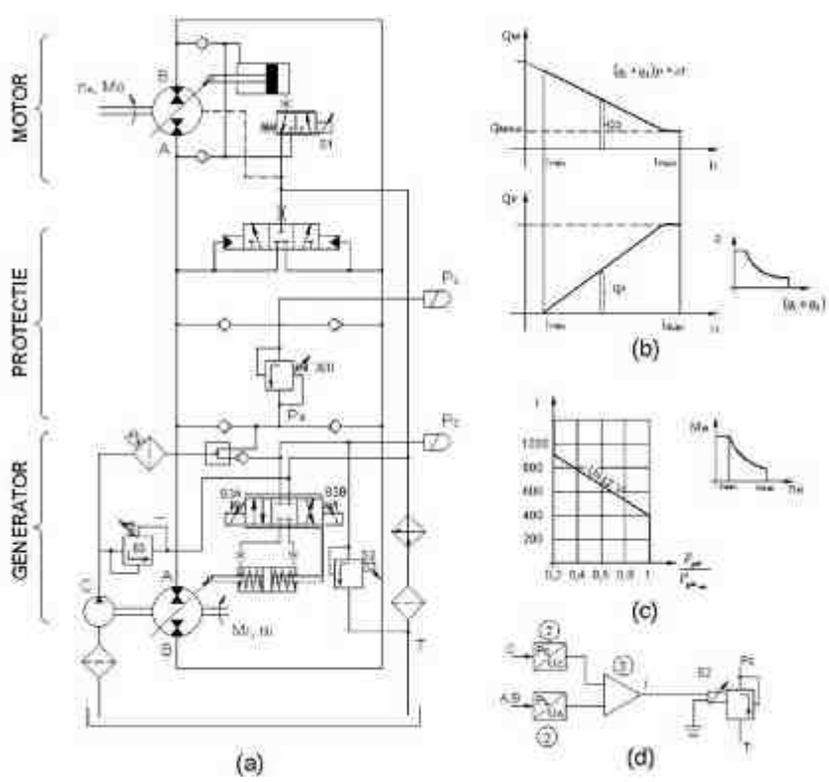

Fig. 5

BIBLIOGRAFIE

[1] R. Ionescu º .a. - Roboþi industriali - MEC, 1996
[2] Vasiliu N., Catanã I. - Transmisii hidraulice º i electrohidraulice vol. I Maº ini hidraulice volumice - Ed. Tehnicã, Bucureº ti, 1998
[3] Ionescu, D.Gh. - Lecþii de termodinamica fluidelor vâscoase - Ed. Tehnicã, Bucureº ti 1997
[4] Backe W. Servohydraulic RTWH, Aachen, 1984
[5] Wesswls A.C.E. Mynett J.K., Kostense J.K., Prins J.E. -Modern laboratory techniques Delft University of Technology, Delft hydraulic publications, 1989
[6] Guillon M. - L'asservirssement hydrauliques et electrohydrauliques
[7] Johnson J. - Electrohydraulic servosistems. Industrial Publishing Company, Cleveland, 1973
[8] Keller G.R. - Automatique. Hermes, Paris, 1993

SISTEM DE ACHIZIȚIE PENTRU SENZORI DE PRESIUNE CAPACITIVI ÎN TEHNOLOGIA LTCC

ACQUISITION SYSTEM FOR CAPACITIVE PRESSURE SENSORS IN LTCC TECHNOLOGY

Cosmin Tamas, Cristina Marghescu, Ciprian Ionescu
Universitatea Politehnica Bucuresti,
Facultatea de Electronica, Telecomunicatii si Tehnologia Informatiei
Centrul de Electronica Tehnologica si Tehnici de Interconectare
cosmin.tamas@cetti.ro

1. Introducere

Sistemul studiat are la bazã un senzor de presiune capacitiv realizat în tehnologie LTCC (senzorul are la bazã o membranã deformabilã care se deformeazã datoritã diferenței de presiune ceea ce are ca efect modificarea valorii capacității). Aceastã tehnologie, având la bazã ceramica prelucratã termic la temperaturi joase (acronimul LTCC provenind din limba englezã - **Low Temperature Co-fired Ceramic) a devenit în prezent unele dintre cele mai studiate şi cercetate tehnologii, având în vedere principalele calități de material ale ceramicii in microelectronică mai ales in zona frecvențelor înalte (ordinul zeci si sute de GHz).**

2. Principiul de funcționare al sistemului de achiziție

Capacitatea senzorului este monitorizatã în permanențã (vezi figura 1) de cãtre sistemul realizat in jurul circuitului Analog Devices AD7745. Pe lângã citirea capacității acest circuit dispune º i de un senzor de temperaturã integrat având o bunã stabilitate, sistemul oferind astfel pe lângã informațiile legate de senzorul capacitiv studiat º i o referințã în temperaturã. Comunicația cu microcontrolerul se realizeazã prin intermediul protocolului „I2C". Citirea datelor prelucrate în final de cãtre microcontroler sunt afiºate pe un mic LCD, însã pentru realizarea unor studii de lungã duratã (de ordinul zilelor sau lunilor) a fost prevãzutã º i o conexiune opționala prin USB cu PC-ul, pentru stocarea datelor, generarea de grafice º i, respectiv, de tabele cu valorile înregistrate.

Structura ceramicã include pe lângã senzorul de temperaturã º i circuitul desenat necesar funcționării AD7745, pentru a se obține o influențã parazitã minimã externã asupra senzorului de mãsurã.

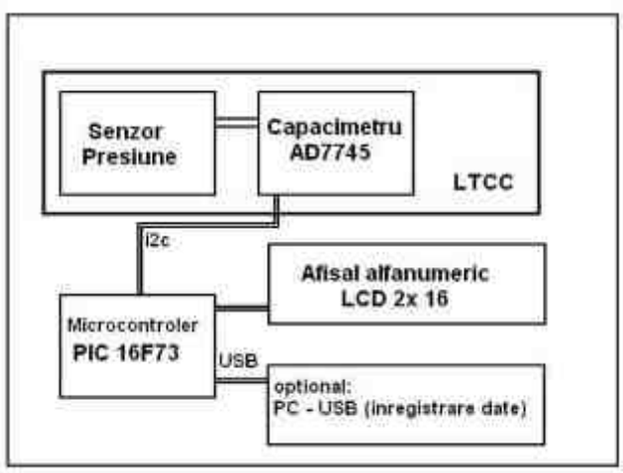

Figura 1–Sistemul de achiziție destinat senzorului capacitiv

2. Funcționarea senzorului

Pe plan internațional, piața este dominatã de senzorii de presiune realizați în siliciu. În unele aplicații, senzorii de presiune realizați în tehnologia straturilor groase reprezintã o alternativã. O variantã de realizare mai nouã a senzorilor de presiune ceramici o reprezintã tehnologia LTCC (Low Temperature Cofired Ceramic). În comparație cu senzorii pe bazã de materiale semiconductoare, senzorii ceramici au dimensiuni mai mari, sunt mai robuºti º i au o senzitivitate mai micã dar pot funcționa pe un domeniu mai larg de temperaturã .

Cei mai mulți senzori aflați pe piața funcționează pe principiul piezorezistiv. Acest fapt se datorează senzitivității relativ ridicate și ieșirii de semnal proporționale cu presiunea pe un domeniu larg de valori. Impedanța de ieșire este mică, având avantajul protecției la perturbații. Senzori capacitivi pe de altă parte au o senzitivitate intrinsecă mult mai mare decât cea a senzorilor piezoelectrici. Pe de altă parte senzorii capacitivi sunt mai sensibili la temperatură dar au un consum redus de energie. Dezavantajul major al acestora este capacitatea mică ce trebuie măsurată, impedanța mare de ieșire și răspunsul neliniar. Capacitatea mică a acestora îi face susceptibili la efecte parazite.

Majoritatea senzorilor ceramici în tehnologia straturilor groase au ca element sensibil o diafragmă deformabilă. Deformarea este produsă de presiunea aplicată și apoi este convertită într-un semnal electric prin modificarea caracteristicilor unor componente realizate în straturi groase. Tehnologia LTCC oferă posibilitatea de a realiza structuri tridimensionale (3D) care constau dintr-o diafragmă circulară susținută la margine. Structură de bază a unui asemenea senzor constă din doi electrozi, unul fiind fix iar celălalt lipit de diafragmă, vezi figura 2. Valoarea capacității este determinată de distanța dintre electrozi, suprafața electrozilor și natura dielectricului utilizat.

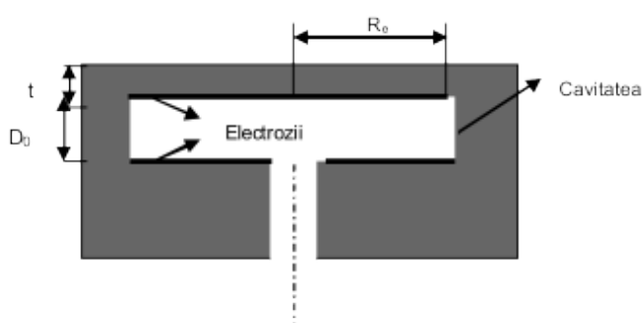

Figura 2 Construcția senzorului de presiune capacitiv

Presiunea ce se aplică diafragmei produce o deformare elastică. Deformarea poate fi calculată cu relația (1) preluată din teoria plăcilor deformabile:

$$y(r) = \frac{3P(1-\upsilon^2)(R_d^2-r^2)^2}{16Et^3} = y_0(R_d^2-r^2)^2 \quad (1)$$

Neglijând câmpul de margine capacitatea se poate calcula cu:

$$C(P) = \varepsilon_0\varepsilon_r \int_0^{2\pi} d\theta \int_0^{R_d} \frac{rdr}{D_0 - y(r)} \quad (2)$$

Au fost utilizate următoarele notații : *y(r)* deformația la poziția *r* de la centru atunci când se aplică presiunea *P*, *E* modulul de elasticitate (Young), *v* coeficientul Poisson, *t* grosimea diafragmei și R_D raza diafragmei. *C(P)* este valoarea capacității când se aplică presiunea P. Este posibil să se rezolve analitic integrala (2) prin înlocuirea *y(r)* din (1). Pentru simplificare se introduce un parametru adimensional $=y_0/D_0$ și se schimbă variabila din *r* în *x* :

$$r = \sqrt{\beta}\left(R_d^2 - r^2\right) \quad (3)$$

Aceasta conduce la:

$$C(P) = \frac{\pi\varepsilon_0}{\sqrt{\beta}D_0} \int_{\sqrt{\beta}R_d^2}^{0} \frac{dx}{x^2-1} \quad (4)$$

Respectiv,

$$C(P) = \frac{\pi \cdot \varepsilon_0}{2D_0\sqrt{\beta(p)}} \ln\left|\frac{\sqrt{\beta(p)}R_d^2+1}{\sqrt{\beta(p)}R_d^2-1}\right| \quad (5)$$

Aceste ecuatii sunt valabile în cazul aplicarii presiunii pe latura de sus.

Se constată că mărimea de ieșire este influențată de permitivitatea mediului - ε_r, raza electrozilor - R_e, distanța dintre electrozi fără deformare - D_0 și evident de deformarea *y(r)*.

Câteva din caracteristicile de material sunt prezentate în tabelul 1:

Tab. Proprietățile materialelor pentru substrat LTCC

Caracteristici	Valoare
Densitate (ρ)	3.1 [g/cm^3]
Coef. de dilatare	5.8x10^{-6}[1/K]
Conductivitate termică (k)	3.3 [W/mK]
Modul Young (E)	110 [GPa]
Coef. de temperatură al modulului (TCE)	-240x 10^{-6} [1/K]
Coef. Poisson (v)	0.17

Referitor la realizare, senzorii prezentați au fost realizați la institutul Jozef Stefan din Ljubljana în cadrul unei cooperări bilaterale dintre acesta și UPB-CETTI.
Un exemplu de realizare este prezentat în figura 3 :

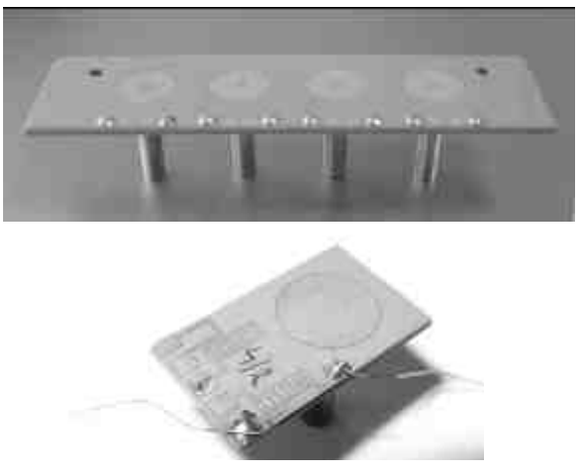

Figura 3. Variante de realizare a) patru structuri b) o singură structură cu spațiu pentru plasarea circuitului de măsură AD7745.

4. Funcționarea sistemului de calcul

Semnalul furnizat de senzorul capacitiv este prelucrat de sistemul de achiziție prin intermediul circuitului AD7745. Schema bloc a acestui circuit este prezentată în figura 4. Acesta este in esență un convertor de mare rezoluție de tip capacitate-semnal digital (la bază se află un convertor analog-digital de tip sigma/delta, având rezoluția de 24 biți și 21 de biți efectivi) cu performanțe ridicate, liniaritate foarte ridicată ±0.01% și acuratețe foarte bună ±4 fF (deci se ajunge la măsurarea nivelelor de femto 10^{-15} Farazi). Circuitul mai conține și o referință de tensiune și un senzor de temperatură (rezoluție de 0.1°C). Comunicarea circuitului cu exteriorul se realizează prin interfața I2C, cu o unitate de control a semnalului (construită în jurul circuitului PIC 16F73) unde are loc prelucrarea semnalului și transmiterea informațiilor externe către un afișor LCD si/sau spre PC pentru înregistrarea și memorarea datelor pe termen îndelungat prin protocolul USB.

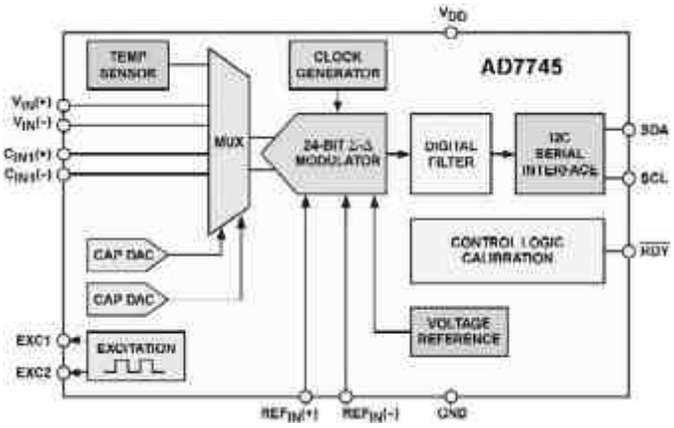

Figura 4- Schema bloc a circuitului AD7745

La baza funcționarii circuitului AD7745 se află generatorul de semnal dreptunghiular si convertorul sigma-delta. În figura 5 este prezentat în mod simplificat principiul de măsură al capacității : generatorul de semnal dreptunghiular (excitația) încarcă condensatorul C_x , iar modulatorul este antionează datele primite de la condensator.

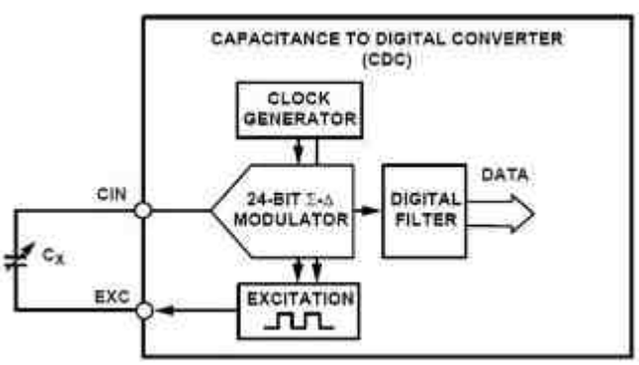

Figura 5 Principiul de măsură a capacității

Sistemul de achiziție a fost realizat folosind un microcontroler Microchip PIC16F73. Acesta conține o unitate de control al magistralei i2c (necesară comunicării cu circuitul AD7745), un convertor ADC pe 10 biți, un oscilator calibrat intern, memorie EEPROM, etc. Funcționarea programului se bazează pe folosirea unei rutine de calibrare a senzorului și citirea permanentă a datelor, atât a celor furnizate de către senzorului de presiune capacitiv cât și de cel de temperatură.

Valoarea in semnal hexazecimal este convertitã in semnal în baza zece iar apoi sunt aplicate o serie de corecţii, in final valorile sunt afişate pe un afişaj LCD. Există posibilitatea, atunci când se doreşte monitorizarea sistemului pe un termen îndelungat şi realizarea unor grafice, ca întreg sistemul sã rãmânã conectat la PC , comunicaţia fiind realizatã printr-un circuit FTDI FT232R (convertor Seria-USB).

4. Măsurători

În urma mãsurãtorilor au rezultat urmãtoarele valori ale capacitãţii :

Tab. Valorile capacitãţii rezultate în urma mãsurãtorilor

Temperatură (°C)	Presiune (mbar) 0	50	100	200	300	400	500	600	700
70	4,642	4,638	4,634	4,626	4,619	4,611	4,604	4,596	4,589
50	4,644	4,640	4,636	4,629	4,621	4,614	4,606	4,599	4,591
25	4,650	4,646	4,642	4,635	4,627	4,620	4,612	4,605	4,597
0	4,657	4,653	4,650	4,643	4,635	4,627	4,620	4,613	4,605
-25	4,664	4,660	4,657	4,649	4,642	4,634	4,626	4,619	4,611

5. Mulţumiri

Această lucrare a fost realizatã în urma activitãţilor desfãşurate în cadrul CETTI, în cadrul proiectului de cercetare bilateralã *Dezvoltarea de senzori şi traductoare de presiune avansate* (DAPST) desfãşurat cu sprijinul Autoritãţii Naţionale pentru Cercetare ştiinţificã (ANCS).

6. Bibliografie

[1] S. Beeby, G. Ensell, M. Kraft, N. White, "MEMS Mechanical Sensors", Artech House, 2004, Cap.6.

[2] D. Belavič, M. Santo Zarnik, M. Jerlah, M. Pavlin, M. Hrovat, S. Maček, "Capacitive thick-film pressure sensor: material and construction investigation", Proceedings of the XXXI International Conference of IMAPS Poland 2007, Rzeszów, Krasiczyn, Polonia, pp. 249-253, Septembrie 23-26, 2007.

[3] D. Belavič, M. Santo Zarnik, S. Maček, M. Jerlah, M. Hrovat, M. Pavlin, "Capacitive pressure sensors realized with LTCC technology", Proceedings of the 31st International Spring Seminar on Electronics Technology (ISSE 2008), Reliability and life-time prediction, Piscataway: IEEE, Budapest, Hungary, 7-11 Mai, 2008. pp. 271-274, 2008.

[4] C. Ionescu, P. Svasta, C.Marghescu, M. Santo Zarnik, and D. Belavič, "Study on optimization of capacitive pressure sensorusing coupled mechanical-electric analysis", ISSE 2009 Proceedings, Brno, Republica Cehã, Mai 13-17, 2009.

[5] C. Ionescu, P. Svasta, C.Marghescu, M. Santo Zarnik, and D. Belavič, **"The Design and Improvement of LTCC-based Capacitive Pressure Sensors Employing Finite Element Analysis", EMPC 2009 Proceedings, Rimini, Italia, Iunie 15-18 2009.**

[6] Cristina Marghescu, Darko Belavič, Marina Santo Zarnik, Ciprian Ionescu,Paul Svasta, Marko Hrovat, Sandi Kocjan, Igor Lipušček, "Evaluation of a Ceramic Capacitive Pressure Sensor in Different Media", MIIDEM Conference 2009, 45th International Conference on Microelectronics, Devices and Materials, Postojna,Slovenia, Septembrie 9-11, 2009.

[7] ***, PIC16F73 Datasheet, http://www.microchip.com // PIC16F73/4/6/7 Datasheet (4/1/2003)

[8] ***, AD7730 Datasheet, http://www.analog.com/static/imported-files/Data_Sheets/AD7730_7730L.pdf

[9] ***, MPXA6115A Datasheet, http://www.freescale.com/files/sensors/doc/data_sheet/MPXA6115A.pdf

[10] http://www2.dupont.com/MCM/en_US/tech_info/products/ltcc.html // low temperature co-fired ceramic (LTCC) materials

DINAMICA TRADUCTOARELOR PNEUMATICE CU CONSUM REDUS DE ENERGIE PENTRU MĂSURAREA FORȚELOR ÎN PROCESE LENTE

THE DYNAMICS OF THE PNEUMATIC TRANSDUCERS WITH LOW ENERGY CONSUMPTION FOR MEASURING FORCES IN SLOW PROCESSES

Erol Murad *, Edmond Maican*, Alexandru Marin*, Cãtãlin Dumitrescu **
(*)Universitatea POLITEHNICA Bucureºti (**) INOE 2000-IHP

Abstract
For measuring forces with slow variation was created a pneumatic transducer at which were applied the concepts of reducing energetic consumption and keeping low costs for the automatic system. This kind of unconventional pneumatic transducer does not require a special source of pressurized air the consumption being extremely low which simplifies structure, use and cost of this device. The power consumed is very low which represents a very positively ecological aspect.
In the paper is presented a model and a simulation software for studying the dynamic behavior of this transducer and also the results of the tests performed with this software.

1. Aspecte generale

In multe procese din agriculturã ºi din industria alimentarã trebuiesc mãsurate forțe ºi greutãți care variazã lent în timp.

A fost studiatã o familie de traductoare pneumatice, compacte, simple, ieftine, fiabile ºi nu în ultimul rând cu un consum foarte redus de energie la o precizie de mãsurare foarte bunã, ne afectatã de histeresis ºi de temperatura mediului în care funcționeazã. Utilizarea aerului comprimat la presiuni reduse nu este periculoasã, este perfect ecologicã ºi necesitã, în varianta studiatã un cosum foarte redus de energie. Acest tip de traductoare se pot utiliza ºi în mediile EX deoarece nu prezintã pericol de explozie.[1,5,6]

Familia de traductoare are valori nominale în domeniul F_{mn}\{20, 400\}N, cu trei suprafețe efective ale membranelor S_{ef}\{10, 20, 40\}cm^2 la trei presiuni de alimentare p_{al}\{25, 75, 140) kPa.

In această lucrare s-a studiat funcționarea capului de serie, traductorul cu S_{ef}=10 cm^2, alimentat la p_{al}=25 kPa ºi cu valoarea nominalã a forței de mãsurat de F_{mn}=20 N.

Pentru modelarea traductorului, pentru validarea stucturii ºi funcționalității, precum ºi pentru determinarea comportãrii dinamice ºi a consumului de aer comprimat s-a realizat un program de simulare în mediul de simulare MEDSIMFP10 dezvoltat în FeePascal.

2. Modelul dinamic al traductorului

Schema principialã a traductorul de forțã pneumatic este prezentatã în figura 1.

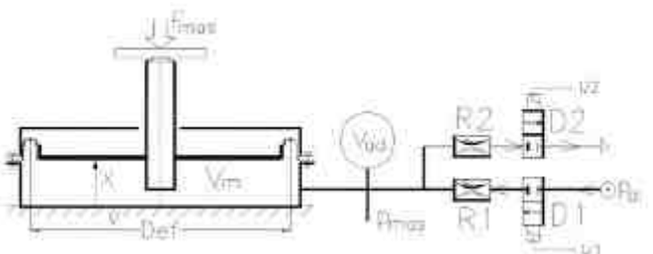

Fig. 1 Schema funcționalã

Schema funcționalã detaliatã a sistemului de mãsurare pneumatic studiat este prezentatã în lucrarea [6].
In timpul funcționãrii poziția Ht a tijei traductorului poate varia între Ht_{min} ºi Ht_{max} cu revenire spre Ht_{med} (fig.2).

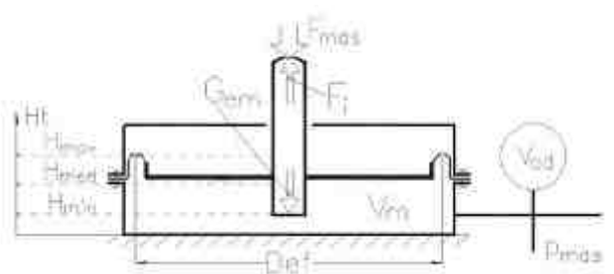

Fig. 2 Celula pneumaticã de sarcinã

Pentru dezvoltarea modelului întregului sistem de măsurare s-a utilizat schema bloc prezentată în figura 3.
Sistemul se compune din cinci componente: celula de sarcinã, traductorul de poziþie, algoritmul de conducere, blocul elementelor de execuþie º i convertorul presiune-tensiune.

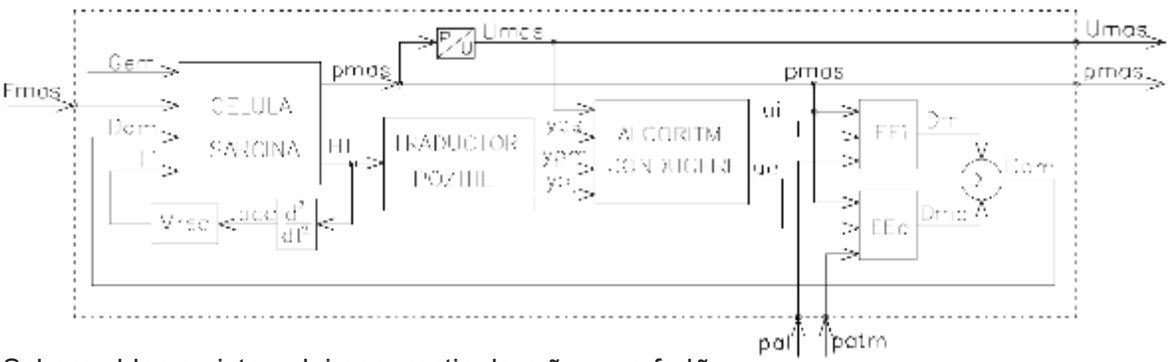

Fig. 3 Schema bloc a sistemului pneumatic de mãsurare forþã

Elementul principal, celula de sarcinã, are la intrare urmãtoarele mãrimi: forþa de mãsurat F_{mas}, greutatea G_{em} echipamentului mobil, forþa de inerþie F_i a maselor reduse M_{red} la tijã º i debitul masic de aer D_{am}. La ieºire se obþin presiunea de mãsurare p_{mas} º i cursa tijei Ht.

Din traductorul de poziþie ies trei semnale binare y_{pj}, y_{pm} º i y_{ps} corespunzãtoare pozitie tijei în Ht_{min}, Ht_{med} º i Ht_{max}.

Aceste semnale binare se aplicã algoritmului de conducere care elaborează mãrimile de comandã u_i º i u_e corespunzãtoare introduceri sau evacuãrii de aer în celula de sarcinã.

Elementele de execuþie EE_i º i EE_e, sunt compuse din distribuitoare de tip 3x2 în serie cu rezistenþe pneumatice variabile. In funcþie de mãrimile de comandã u_i sau u_e se poate introduce un debit Dm_i în camera de mãsurare, sau se poate evacua un debit Dm_e din camera de mãsurare.

Pentru cuplarea la sistemele de conducere automatã presiunea de mãsurã p_{mas} este convertitã în 0-5V, variantã adoptatã deoarece consumã mai puþinã putere electricã.

Modelele dinamice utilizate pentru funcþionarea celulei pneumatice de sarcinã sunt [6]:

- pentru presiunea de mãsurã p_{mas}:

$$p_{mas}(t) = \frac{F_{mas}(t) + F_i(t) + Gem}{S_{ef}} \quad (1)$$

unde: $F_i(t) = M_{red}\dfrac{dHt(t)}{dt}$ (2)

- pentru variaþia volumului din camera de mãsurare $V_m(t)$:

$$\frac{dV_m(t)}{dt} = -\frac{dF_{mas}(t)}{S_{ef}\,dt}\frac{S_{ef}}{F_{mas}(t)}\left(V_m(t) + V_{ad}\right) \quad (3)$$

- pentru deplasarea Ht(t) a tijei º i a echipamentului mobil:

$$\frac{dHt(t)}{dt} = -\frac{dF_{mas}(t)}{dt}\frac{\left(V_m(t) + V_{ad}\right)}{F_{mas}(t)} \quad (4)$$

Traductorul de poziþie are ieºiri binare care sunt definite similar cu cea pentru poziþia medie Ht_{med} :

$$if\ \ ABS(Ht(t) - Ht_{med}) < \varepsilon\ then\ ypm = 1\ else\ ypm = 0;$$

unde: este eroarea de poziþionare (mm).

Deoarece se studiazã dinamica traductorului în regimuri lente se face ipoteza cã procesele termodinamice sunt de izoterme.

Distribuitoarele pneumatice sunt cu acþionare electromagnecticã, au timpi de deschidere º i închidere foarte reduºi, sub 20ms, care a fost neglijaþi în modelul realizat.

In rezistenþele pneumatice curgerea aerului este în regim subsonic º i ca urmare s-a utilizat pentru calculul debitului masic un model de forma [2,7]:

$$D_{ma}(t) = Kdm \frac{p_{\text{int}}(t)}{\sqrt{T_a}} \cdot \left(kp(t)^{2/\chi} - kp(t)^{(1+\chi)/\chi}\right) \quad (6)$$

unde: Kdm este un coeficient global de debit, în care este inclus º i distribuitorul;

$$kp(t) = p_{ev}(t) / p_{\text{int}}(t)$$

unde p_{int} (t) º i p_{ev}(t) sunt presiunile la intrare º i la evacuare;

- =1,4 coeficient adiabatic.

Pentru a se păstra caracterul izoterm al procesului s-au reglat rezistenţele pentru a se obţine debite mici. S-au calculat valorile necesare coeficientului de debit Kdm pentru a se obţine un debit, în condiţii medii, de 1 cm^3/s atât la umplere cât º i la golire.

Cu modelul prezentat anterior s-a dezvoltat un program de simulare, DINTRFRPN5.PP, în mediul software de simulare procese MEDSIMFP10.

Pentru a se determina comportarea dinamică a traductorului pneumatic de forţă s-au utilizat semnale de intrare specifice pentru procese lente: pantă lent crescătoare, pantă lent descrescătoare, variaţii periodice cu frecvenţă redusă.

3. Experimente cu modelul de simulare

In figura 4 este prezentat răspunsul traductorului la un semnal de intrare constant F_{mas}(t)=15N. Acest experiment s-a realizat pentru un timp total de simulare de 20s pentru a se observa în detaliu cum funcţionează traductorul în perioada de iniţializare a perioadei de măsurare, de la cuplarea la PLC la stabilizarea semnalului de măsură, p_{mas}(t). Intrarea în regim normal este reprezentată de saltul variabilei Reg de la valoarea 0 la 1.

Se observă că tija traductorului rămâne sprijinită pe corpul celulei de sarcină până când presiunea din celulă egalează presiunea de măsurare; apoi de produce ridicarea echipamentului mobil până la poziţia medie Ht_{med}. In acel moment se consideră că traductorul este normal funcţional

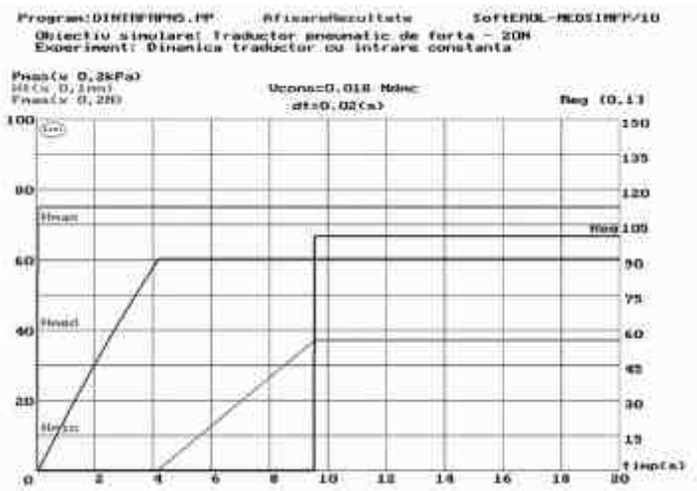

Fig. 4 Răspuns la un semnal de intrare constant

In figura 5 este prezentat răspunsul traductorului la un semnal de intrare rampă crescătoare cu o pantă de +0,2 N/s.

Se constată că după stabilizarea regimului de funcţionare presiunea de măsură p_{mas} variază strict proporţional cu F_{mas}(t), fără º ocuri la schimbările de sens de deplasare a tijei.

Modificarea poziţiei tijei se face datorită creº terii forţei măsurate, ceea ce produce comprimarea aerului din camera de măsurare º i coborârea tijei. Când s-a ajuns la Ht_{min} algoritmul de conducere aplică o comandă u_i=1 elementul de execuţie EEi prin care se introduce în camera de măsurare un debit masic D_{mi} care, sub presiune constantă egală cu p_{mas}, determină ridicarea tijei până la Ht_{med} când u_i=0. Dacă în continuare forţa de măsurat creº te se va repeta secvenţa anterioară.

Acest comportament s-a obţinut prin reglaea debitului mediu de intrare la 1 cm^3/s. Ca urmare pentru secvenţa simulată se constată un consum foarte mic de aer V_{cons}=18 Ncm^3, ceea ce corespunde unui nivel ridicat de independenţă în alimentarea cu energie pneumaticã.

Pentru procese mai rapide se poate modifica reglajul rezistenţei de intrare R1 pentru a se mării debitul umplere în vererea creº terii vitezei de urmărire a variaţiei mărimi de măsurat F_{mas}.

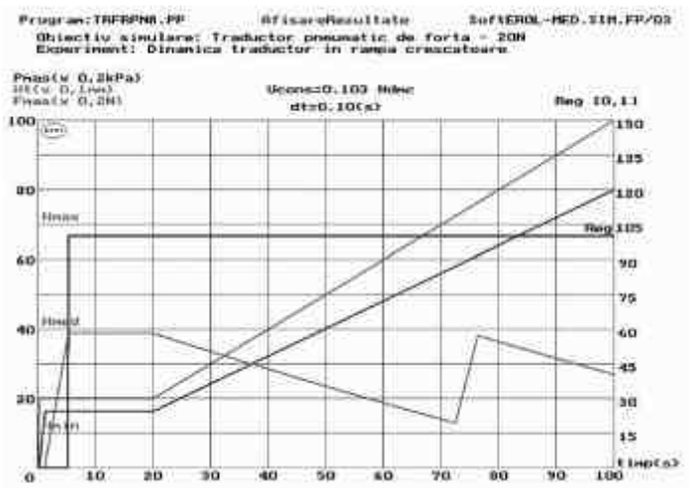

Fig. 5 Răspuns la o rampă crescătoare

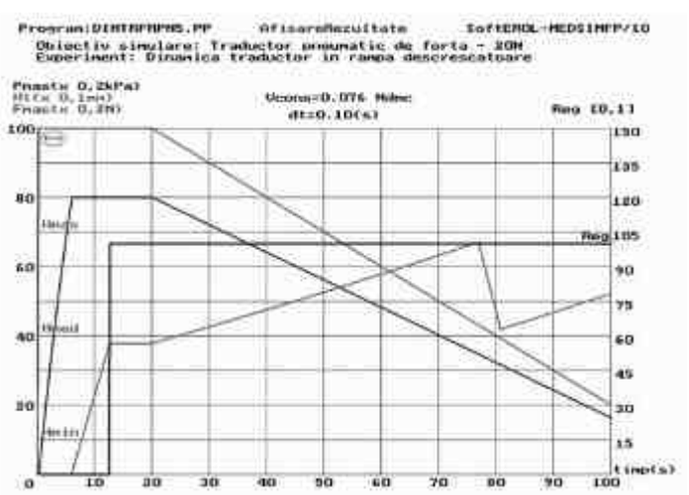

Fig. 6 Răspuns la o rampă descrescătoare

In figura 6 este prezentat răspunsul traductorului la un semnal de intare rampă descrescătoare cu o pantă de -0,2 N/s .

Se constată că după stabilizarea regimului de funcționare presiunea de măsură p_{mas} variază strict proporțional cu $F_{mas}(t)$, fără șocuri la schimbările de sens de deplasare a tijei. Modificarea poziției tijei se face datorită scăderii forței măsurate ceea ce produce destinderea aerului din camera de măsurare și ridicarea tijei. Când s-a ajuns la Ht_{max} algoritmul de conducere aplică o comandă u_e=1 elementul de execuție EEe prin care se evacuează din camera de măsurare un debit masic D_{me} care, sub presiune constantă, determină coborârea tijei până în Ht_{med} când u_e=0. Dacă în continuare forța de măsurat scade se va repeta secvența anterioară.

In figura 7 este prezentat răspunsul traductorului la un semnal de intrare oscilant periodic cu o perioadă de oscilație T_{osc}=30s, o amplitudine A_{osc}=8N și o medie F_{med}=10N.

Se constată că după perioada de stabilizare a regimului de funcționare, circa 5 secunde, presiunea de măsură p_{mas} urmărește precis variația forței de măsurat $F_{mas}(t)$, fără șocuri la schimbările de sens de deplasare a tijei. Poziția tijei oscilează între Ht_{min} și Ht_{max} cu revenire în Ht_{med}.

4. Estimarea consumurilor energetice

La funcționarea în regimul oscilant periodic s-a consumat din sursa de alimentare pneumatică 83 Ncm^3 în 100s, adica circa 3 Ndm^3/h, valoare foarte mică care confirmă că se poate realiza cerința de independență în alimentarea cu energie pneumatică.

Traductorul de poziție nu consumă putere electrică deoarece este realizat cu relee reed acționate de un magnet permanent montat pe tijă.

Microelectrodistribuitoarele pneumatice moderne au un gabarit și un consum extrem de mic de energie electrică [8,9].

Un astfel de electrodistribuitor, produs de SMC, este de tipul SJY312MT5M-M3 care este acționat în 24 Vcc cu numai 0,1W; are un coeficient de debit de 0,9 dm^3/sbar și o perioada de cuplare/decuplare de 10 ms.

Intr-o perioadă de oscilație a forței de măsurat se efecuează două comenzi, u_e și u_i de circa 4 s, deci se consumă 0,8 J. Intr-o oră sunt 120 perioade de oscilație și se consumă 96 J/h energie electrică, ceea corespunde unei puteri electrice medii continue de 0,0267 W.

In structura sistemului de măsurare analizat un alt consumator de energie electrică este convertorul presiune-tensiune, care a fost selectat din clasa micro. Astfel convertorul Motorola tip MPXV5100, este alimentat cu 5Vcc și consumă în medie 7 mA, deci o putere de 35 mW. El are un volum de 4 cm^3 și o masă de 4g. [10]

Insumând toate consumurile de energie electricã rezultã o putere necesarã de 63 mW. Aceastã valoare foarte micã, împreunã cu consumul foarte redus aer comprimat, 3 Ndm^3/h la 25 kPa, adica circa 5 mW putere pneumaticã, confirmã cã traductorul corespunde cerinţelor impuse pentru utilizare în sisteme autonome cu consum minim de energie.

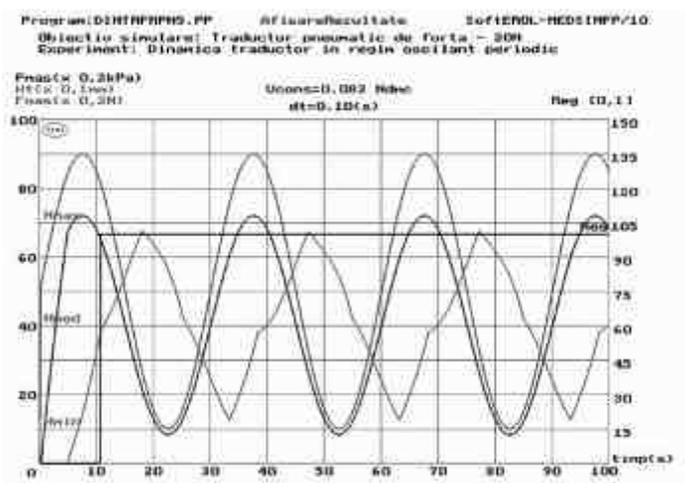

Fig. 7 Răspuns la un semnal oscilant periodic

5. Concluzii

Pentru mãsurarea forţelor cu variaţie lentã s-a elaborat un principiu şi o soluţie constructivã pentru un traductor pneumatic la care s-au aplicat conceptele de minimalizare a consumului energetic, de independenţã energeticã şi de elemente de automatizare cu cost redus. Acest tip de traductor pneumatic neconventional nu necesita o sursã specialã de aer comprimat, consumul într-un regim oscilatoriu cu 120 perioade /h, este extrem de mic, circa 3 Ndm^3/h şi 5 mW energie pneumaticã. Consumul de energie electricã este şi el foarte redus fiind necesarã o putere electricã de numai 63 mW.

Din experimentele simulate rezultã cã datoritã debitelor reduse de umplere şi golire a camerei de mãsurare se obţin forţe de înerţie neglijabile, deci un regim de funcţionare fãrã şocuri şi timpi morţi, cu o precizie mare de mãsurare. Aceste rezultate atestã cã traductorul de forţã analizat corespunde cerinţelor de utilizare în sisteme autonome care impun un consum minim de energie. .

Este necesar ca în viitor sã se continue cercetãrile în vederea optimizãrii constructive şi funcţionale a familiei de traductoare, pentru creşterea preciziei de mãsurare, precum şi a adaptivitãţii la condiţiile variate cerute de sistemele care se automatizeazã

Bibliografie

[1]. Alimov O.D., Gohberg M., Pnevmoprivod i pnevmo-avtomatica c nestandartnami shemami, Ed. ILIM, Frunze, 1970

[2]. Avram Mihai, Acţionãri hidraulice şi pneumatice, Editura Universitarã ,Bucureşti ,2005

[3]. Feidt Michel Louis, TERMODINAMICA şi optimizarea energeticã a sistemelor şi proceselor, Editura BREN, Bucureşti, 2001

[4]. Murad Erol, MEDSIMFP10, Mediu suport software simulare sisteme, FreePascal-v2.1.4, UPB, 2008

[5]. Murad Erol, Mãsurarea parametrilor procesului de uscare a produselor ceramice cu traductoare pneumatice neconvenţionale, HERVEX 2007, Cãlimãneşti 14-16 noiembrie 2007

[6]. Murad Erol, Cercheş Tudor, Traductoare pneumatice neconvenţionale cu consum redus de energie pentru mãsurarea forţelor din instalaţii agricole şi în industria alimentarã, HERVEX 2008, Cãlimãneşti 15-17 noiembrie 2008

[7]. Radcenco V., Alexandrescu N., Ionescu E., Calculul şi proiectarea elemenelor şi schemelor pneumatice, Editura Tehnicã, Bucureşti, 1985

[8]. *** Catalog SMC, 2009

[9]. *** Catalog FESTO, 2009

[10]. *** Catalog Motorola 2008

MĂSURAREA PRESIUNII FOLOSIND SENZORI PIEZO-REZISTIVI ÎN TEHNOLOGIA LTCC

MEASURING PRESSURE USING PIEZO-RESISTIVE SENSORS IN LTCC TECHNOLOGY

Cosmin Tãmaº, Cristina Marghescu, Ciprian Ionescu, Norocel-Dragoº Codreanu
Universitatea Politehnica Bucureºti, Facultatea de Electronicã, Telecomunicaþii si Tehnologia Informaþiei Centrul de Electronicã Tehnologicã º i Tehnici de Interconectare-
cosmin.tamas@cetti.ro

1. Introducere

Lucrarea prezenta se refera la un sistem complex de masura al senzorilor realizati în configuratie punte Wheatstone. Pe piata actuala, din punct de vedere constructiv senzorii se pot clasifica în mai multe categorii: în functie de substratul pe care sunt realizati distingem senzori realizati pe structuri de siliciu (cei mai multi, usor de realizat deoarece folosesc o tehnologie foarte bine implementata si studiata, pot fi integrati pe aceeasi placheta pe care deja exista componente semiconductoare, realizând astfel un senzor complex care ofera direct informatia prelucrata, filtrata într-un format digital), senzori realizati în tehnologia straturilor subtiri, straturilor groase, etc. În functie de principiul de functionare, exista senzori care se bazeaza pe deformarea unei diafragme/membrane, iar captarea informatiei legate de aceasta miscare poate fi realizata utilizând diferite principii deja cunoscute: efectul piezorezistiv (pe suprafata membranei se construieste o punte Wheatstone de rezistoare), efectul capacitiv (se creeaza o capacitate variabila chiar în structura mobila, astfel încât deplasarea membranei sa fie proportionala cu marimea furnizata de senzor - capacitate), electromagnetic (deplasarea membranei conduce la variatii ale inductantei - efectul Hall), piezoelectric (se foloseste o structura de cuart, careia membrana îi aplica o forta F, astfel încât apare efectul piezoelectric deja studiat), optic (se foloseste fibra optica pentru a detecta miscarea membranei).

2. Principiul de funcționare al ansamblului senzor-sișem de măsură

Pentru acest studiu a fost aleasã o structurã realizatã în tehnologie LTCC în straturi groase folosind efectul piezorezistiv (constând dintr-o membrana deformabilã în jurul cãreia se afla o punte de rezistoare conform principiului Wheatstone, apãrând un dezechilibru de curent atunci când membrana este pusa in miºcare datorita diferenþei de presiune). Acest nou material având ca suport ceramica prelucratã termic la temperaturi joase (acronimul LTCC provine din limba engleza - Low Temperature Co-fired Ceramic) a devenit în prezent una dintre cele mai studiate º i cercetate tehnologii, datoritã principalelor calitãþi de material ale ceramicii în microelectronica mai ales in zona frecvenþelor înalte (ordinul zeci si sute de GHz).

Schema bloc a sistemului este prezentatã în figura 1; senzorul se aflã pe o structurã de ceramicã LTCC, iar dispozitivul de conversie º i prelucrare a datelor (realizat cu circuitul Analog Devices AD7730) citeºte variaþiile tensiunii, însã acesta parte de prelucrare se aflã in exteriorul senzorului. Mai departe, primul circuit de conversie este º i el separat de restul sistemului de prelucrare º i afiºare construite folosind un microcontroler Microchip PIC16F73. Comunicaþia intre primul circuit de conversie aflat in proximitatea senzorului º i partea de prelucrare de date se realizeazã folosind protocolul I2C. Microcontrolerul interoghează permanent circuitul AD7730, iar informaþiile obþinute sunt prelucrate º i afiºate pe un LCD. Exista posibilitatea utilizãrii unei interfeþe de USB pentru conectarea la PC pentru obþinerea unor înregistrãri pe termen mai lung, salvarea datelor obþinute, etc.

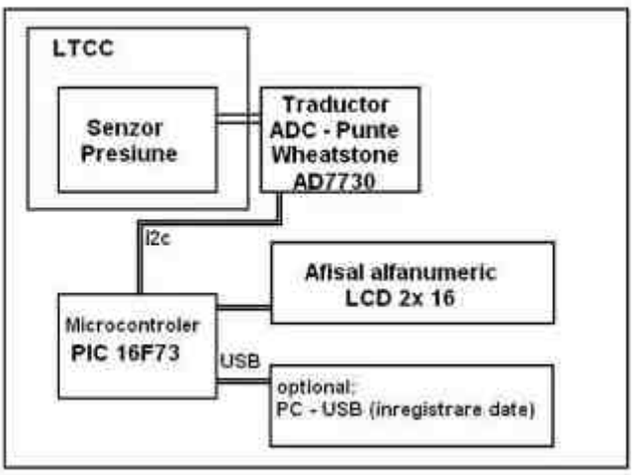

Figura 1 – sistemul de achiziție destinat senzorului piezo-rezistiv

3. Principiul de funcționare şi realizare al senzorilor piezorezistivi

Pe plan international, piata este dominata de senzorii de presiune realizati în siliciu. În unele aplicatii, senzorii de presiune realizati în tehnologia straturilor groase reprezinta o alternativa. O varianta de realizare mai noua a senzorilor de presiune ceramici o reprezinta tehnologia LTCC (Low Temperature Cofired Ceramic). În comparatie cu senzorii pe baza de materiale semiconductoare, senzorii ceramici au dimensiuni mai mari, sunt mai robusti si au o senzitivitate mai mica dar pot functiona pe un domeniu mai larg de temperatura .

Cei mai multi senzori aflati pe piata functioneaza pe principiul piezorezistiv. Acest fapt se datoreaza senzitivitatii relativ ridicate si iesirii de semnal proportionale cu presiunea pe un domeniu larg de valori. Impedanta de iesire este mica, având avantajul protectiei la perturbatii.

Senzori capacitivi pe de altă parte au o senzitivitate intrinsecă mult mai mare decât cea a senzorilor piezoelectrici. Pe de altă parte senzorii capacitivi sunt mai sensibili la temperatură dar au un consum redus de energie. Dezavantajul major al acestora este capacitatea mică ce trebuie măsurată, impedanța mare de ieșire și răspunsul neliniar. Capacitatea mică a acestora îi face susceptibili la efecte parazite.

Majoritatea senzorilor ceramici în tehnologia straturilor groase au ca element sensibil o diafragmă deformabilă. Deformarea este produsă de presiunea aplicată și apoi este convertită într-un semnal electric prin modificarea caracteristicilor unor componente realizate în straturi groase. Tehnologia LTCC oferă posibilitatea de a realiza structuri tridimensionale (3D) care constau dintr-o diafragmă circulară susținută la margine. Elementele sensibile sunt rezistoarele în straturi groase, pe lângă care au fost depuse două rezistoare care nu sunt supuse deformărilor. Acestea au rol în echilibrarea punții, prin ajustarea lor.

Ca și în cazul senzorilor ceramici clasici, elementele sensibile, adică rezistoarele sunt plasate în regiunile cu deformație maximă care se află în partea centrală și aproape de marginea diafragmei circulare. Două rezistoare sunt supuse la întindere iar două la compresiune. Layout-ul este astfel ales încât rezistoarele să poată fi conectate electric la o punte Wheatstone prin conexiunile externe. Atunci când se aplică presiune, diafragma se deformează și induce deformații în rezistoarele în straturi groase și ca urmare, tensiunea de la ieșirea punții variază.

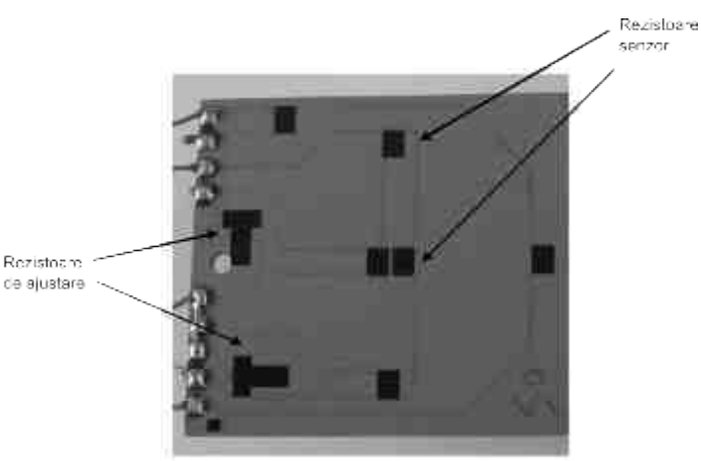

Figura 2. Construcția senzorului de presiune piezorezistiv.

Tab. 1. Proprietãţile materialelor pentru substrat LTCC

Caracteristici	Valoare
Densitate (ρ)	3.1 [g/cm^3]
Coef. de dilatare	5.8x10^{-6}[1/K]
Conductivitate termică (k)	3.3 [W/mK]
Modul Young (E)	110 [GPa]
Coef. de temperatură al modulului (TCE)	-240x10^{-6} [1/K]
Coef. Poisson (ν)	0.17

Referitor la realizare, senzorii prezentati au fost realizati la institutul Josef Stefan din Liubliana în cadrul unei cooperari bilaterale dintre acesta si UPB-CETTI.

4. Funcţionarea sisţemului de măsura

După cum a fost scris si in introducere, sistemul de măsurã este compus din doua blocuri separate: blocul de conversie si interfaţare cu senzorul aflat in proximitatea senzorului (folosind circuitul AD7730) si blocul de prelucrare de date, afiºare si comunicaţie USB (folosind microcontrolerul Microchip PIC16F73).

Schema bloc a circuitului de conversie este prezentata in figura 3.

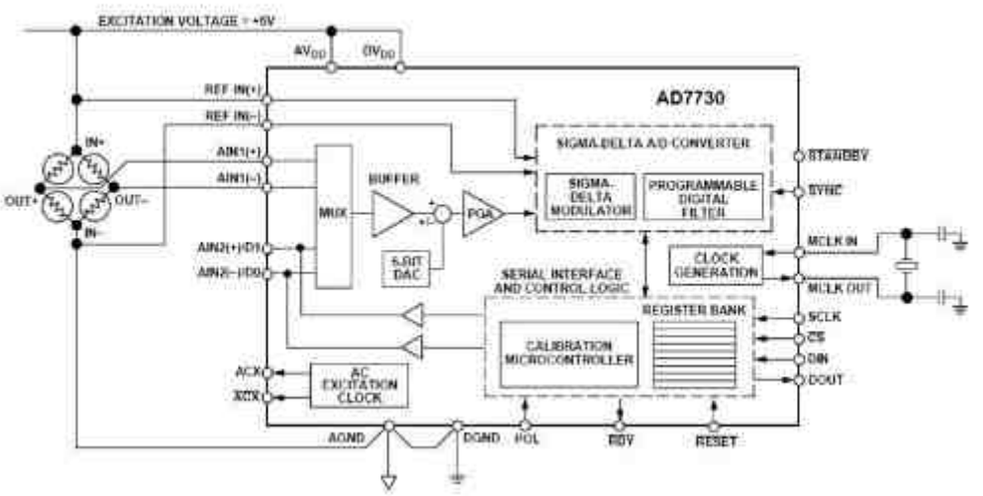

Figura 3 – schema bloc a circuitului de măsurã AD7730 in curent continuu

Pentru descrierea funcţionalã a acestui circuit se va urma o detaliere a blocurilor funcţionale. „MUX” reprezintã un multiplexor analogic, capabil sa accepte semnale diferenţiale. Controlul sau este realizat printr-o interfaţã seriala. Acest bloc generează semnalul analogic multiplexat pentru partea de Buffer. Convertorul DAC pe 6 biţi realizează o tensiune programabilã de offset pentru a fi adãugatã sau eliminatã în lanţul de mãsurã, în felul acesta permiţând o scalare corectã a mãsurãtorii in funcţie de domeniul real de mãsurã. ”PGA” este blocul cu amplificare programabilã, unul dintre cele mai sensibile etaje pe lanţul analogic.

Permite selectarea realizãrii mãsurãtorii dintre patru variante ale tensiuni de intrare unipolare sau patru variante bipolare în limita +10mV ~ +80mV. „AC Excitation Clock” este blocul de excitaţie în cazul utilizãrii unei mãsurãtori in curent alternativ. In felul acesta sunt eliminate erorile caracteristice de curent continuu. „Register bank” este zona unde sunt reţinute toate informaţiile legate de calibrãrile software dorite de cãtre utilizator.

Modulul de conversie sigma-delta realizează cuantizarea si eºantionarea semnalului analogic, având o rezoluţie de 24 biţi utilizabili. Schema bloc a acestui modul de conversie este prezentata in figura 4.

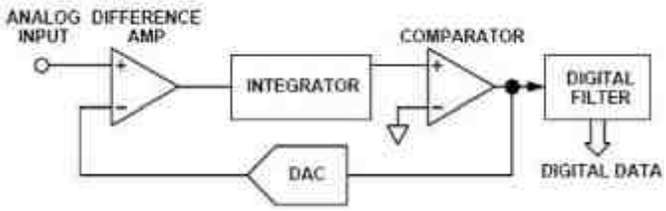

Figura 4 – schema bloc a convertorului sigma-delta

Eºantioanele semnalului analogic sunt injectate în amplificatorul diferenţial alături de semnalul obţinut drept feedback de la convertorul DAC. Diferenţa acestor semnale este integratã in domeniul timp, apoi aplicata etajului comparator. Ieºirea comparatorului furnizează semnal buclei de reacţie negativa pentru a realiza minimizarea diferenţei de semnal. Datele digitale astfel rezultate in urma comparãrii, reprezentând tensiunea de intrare analogica sunt conţinute în trenul de impulsuri de la ieºirea comparatorului. Acest ºir de valori sunt convertite în cuvinte de date folosind filtrul digital. Frecvenţa de eºantionare a buclei de modulaţie este mult mai mare decât banda semnalului de intrare. Urmeazã blocul de filtrare digitala de semnal, reprezentat de douã filtre distincte. Primul este un filtru FIR trece jos. Frecvenţa de tãiere si rata de ieºire a acestui filtru sunt programabile. Al doilea etaj de filtrare are trei moduri diferite de operare. Modul normal (un filtru FIR trece-jos), modul al doilea (Fast Step) în care se face detecţia rapidã la trecerea fiecãrui pas de cuantizare a semnalului analogic de intrare, ºi al treilea mod (Skip Mode) în care acest filtru este scurtcircuitat, rãmânând doar primul bloc de filtrare.

Comunicaţia cu microcontrolerul se realizeazã folosind interfaţa spi (I^2C). O particularitate a acestui circuit o reprezintã selectarea frontului de ceas pe care se face citirea datelor folosind un pin de comanda (POL); daca Pol este legat „High” (Vdd), atunci se va considera semnal de clock fiecare front crescãtor, si analog, daca POL este legat ‚Low” (Gnd) se va considera frontul descrescãtor.

Microcontrolerul utilizat este un circuit PIC16F73, care conţine intern atât magistrala hardware I2C, cat si convertor AD necesar pentru realizarea anumitor mãsurãtori cu alţi senzori pentru obţinerea etalonãrii. De exemplu, in paralel se realizeazã si citirea unui alt senzor in tehnologie clasica (pe siliciu, fabricat de Freescale) care furnizeazã ca informaţie o tensiune proporţionalã cu presiunea. In felul acesta, se ia ca valoare de referinţã senzorul industrial Freescale si se poate compara cu rezultatul obţinut de la senzorul experimental in tehnologie LTCC. Poza circuitului de comunicaţie este prezentata in figura 5. (5A displayul LCD ataºat montajului, 5B vederea TOP a montajului).

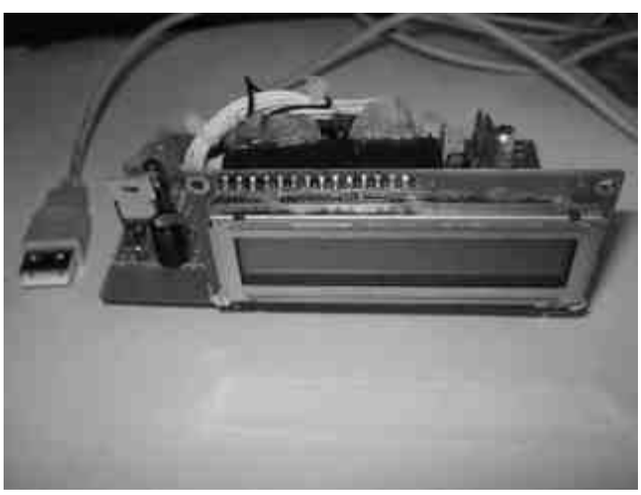

Figura - 5A (circuit comandã)

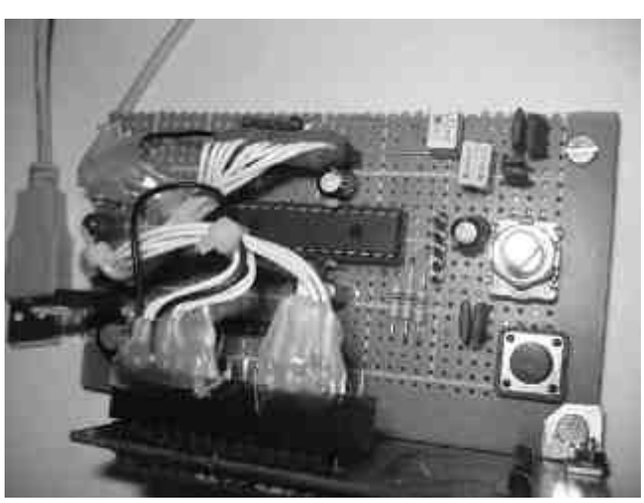

Figura 5B – vedere Top amplasare componente

In figura 6 este prezentat senzorul LTCC (6A si 6B) si senzorul de referinţă produs de Freescale (figura 6C).

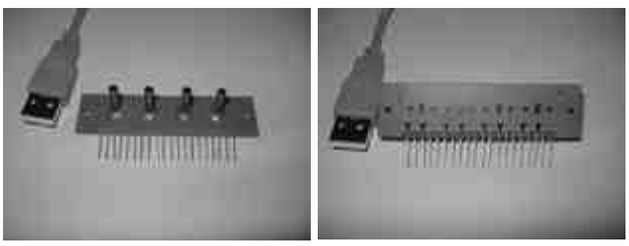

Figura 6 (A, B)–senzor LTCC piezorezistiv Top si Bottom Structura multiplă de cercetare (4 senzori)

Figura 6C - senzor Freescale (MPXA6115)

5. Mulţumiri

Senzorii prezentaţi au fost realizaţi la institutul Jožef Stefan din Ljubljana în cadrul unei cooperări bilaterale dintre acesta şi UPB-CETTI. Mulţumim Ministerelor cercetării din cele două ţări pentru sprijinul financiar.

6. Bibliografie

[1] Marina Santo Zarnik, Darko Belavic, Kazimierz P. Friedel, Artur Wymyslowski, „Finite-Element Analysis of a Piezoresistive LTCC Pressure Senzor", *Conference Proceedings*, Timisoara, SIITME 2003, pp 69-73

[2] ***, PIC16F73 Datasheet, http://www.microchip.com // PIC16F73/4/6/7 Datasheet (4/1/2003)

[3] ***, AD7730 Datasheet, http://www.analog.com/static/imported-files/Data_Sheets/AD7730_7730L.pdf

[4] ***, MPXA6115A Datasheet, http://www.freescale.com/files/sensors/doc/data_ sheet/MPXA6115A.pdf

[5] http://www2.dupont.com/MCM/en_US/tech_info/products/ltcc.html // **low temperature co-fired ceramic (LTCC) materials**

INFORMATIC SYSTEM FOR BLENDED WINES PROCESS

SISTEM INFORMATIC PENTRU PROCESUL DE CUPAJARE

M. Blejan[1)], B. Lupu[1)], I. Ilie[1)], A. Fedorov[1)] and V. Nica[1)]

[1)] *Hydraulics and Pneumatics Research Institute, INOE2000, Bucharest, Romania*
blejan.ihp@fluidas.ro

***Abstract**: Blending is one of the main processes developed for obtaining homogenous wines, with important complementary qualities. By means of an informatics system it is realized the right dosage on the base of a blending recipe determined by an expert system using data from initial analyses, for obtaining a high quality product. Wines are tasted by a group of authorized experts that will make the eventual rectifications. The expert system undertakes these indications and improves the blending recipe. In the end is obtained an expert open system which will be able to acquire in time necessary data for blending wine sorts specific for each producer. The article presents an experimental model of an informatics system for producing blended wines which will be tested for showing its performance and usefulness in the technological process of producing blended wines.*

1. Introduction

The experimental model of the installation for producing blended wines is conceived as an informatics system which receives at entry the measured or appraised parameter values of the wine sorts, which compose the blending recipe, and provides at exit by means of an automatic scale an amount of wine corresponding to the desired sort of blended wine.

Figure 1 shows the functional block scheme of the experimental model and the Figure 2 shows the structural and functional scheme of the subsystem for determining the blending recipes.

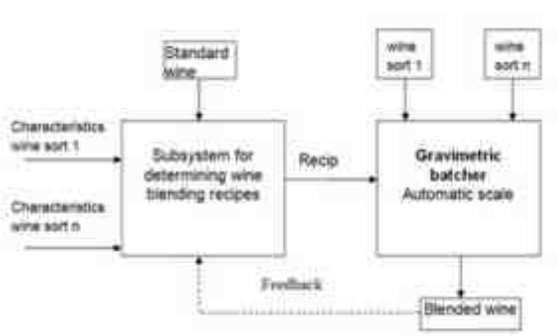

Fig.1 Functional block scheme of the experimental model

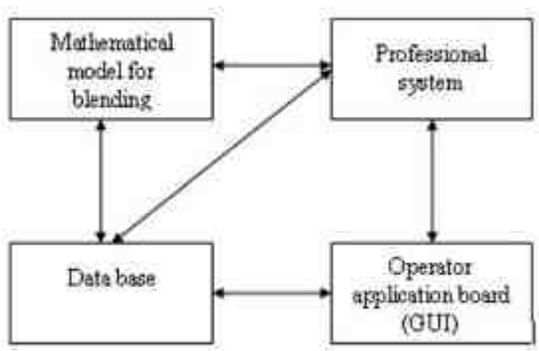

Fig.2 Subsystem for determining blending recipes

The expert system determines, on the base of the characteristics of the wine sorts used and the characteristics of the standard wine, the blending recipe. This blending recipe is applied to a gravimetric batcher which processes it by blending the wines composing the recipe obtains in a bin the blended wine. It is possible to induce a feedback reaction by comparing the blended wine with the standard wine, improving in this way the blending recipe.

2. General Module Description

The electronic module is build based on a general purpose PIC16F877A microcontroller, made by Microchip. Few of the main characteristics of this type of microcontroller are:

- RISC architecture with 35 instructions with one word length (14 bits);
- the instructions are executed within a machine cycle except the jump instructions which need two machine cycle as execution time.
- the maximum operation speed is 200 ns per instruction cycle;
- the program memory is a flash memory with the capacity of 8096 instructions;
- the data memory (RAM) has 386 bytes;
- the parameters memory (EEPROM data memory) consists in 256 bytes.

The PIC16F877A microcontroller has a large variety of integrated peripherals such as:

- a 8 bit timer and two 16 bit timers;
- two Capture/Compare/PWM modules with the speed of 12,5 ns in Capture mode, 200 ns in Compare mode and the maximum PWM resolution of 10 bits;
- synchronous serial communication port with SPI support (Master mode) and I2C;
- USART communication port with address detection;
- brown-out detection circuit for Brown-out Reset (BOR);
- 8 channels 10 bits analog to digital converter;
- two analog comparators;
- programmable voltage reference.

3. Functional Description

The electronic controller is used to obtain the blending recipe by gravimetrical dosage of wines into the collecting container using the dosage recipe assumed from the data base implemented at the level of the informatics system and basing on the weight information for the collecting container provided by the electronic scale or by the weight meter throughout the measuring amplifier; the dosage is successively made by assuming from each wine container the necessary quantities to realize the recipe.

The wine quantities assumed into the collecting container are inspected by the electronic controller using electro valves placed on the circuits between the wine containers and the collecting one.

The communication with the electronic scale and the informatics system is assured by a RS232 serial bus that implements the MODBUS communication protocol into which the electronic controller is “master”.

Constructively, the electronic module is designed in hybrid technology, through hole and SMD, on two printed circuit boards, placed into a plastic case with DIN rail fastening. The electrical connections for the control electro valves and for the power supply are made using screw terminals, and the connection to the RS232 serial bus is made, conforming with the RS232 standard, using a DB9 type connector.

The electronic module is made from the stabilized power supply, analogical input circuits, analogical output circuits, digital input circuits, digital output circuits, a local interface and in-circuit programming (ICSP).

3.1. The regulated power supply

The regulated power supply receives on the input terminal the module's supply voltage, rippled DC voltage within the range of 9...36 V, providing on the output terminal a regulated voltage of 5 V with current limitation at 0,5 A. The power supply is based on the LM2574-05 integrated circuit (LM2574-05 is a “step-down”/buck converter commutation regulator type).

The switching power supply solution has been chosen because it offers advantages regarding high efficiency, wide field of output voltage, small printed boards, reliability and others.

3.2. The analogical circuits

The analogical input circuits allow the connection of four transducers with 4..20 mA output current, powered through 2 or 3 wires. Each input has a two terminal connector: supply and the input current signal which enters the electronic module. A current/voltage converter is placed onto the input signal, that changes the 4..20mA current range into the 1..5 V voltage range. This voltage is applied by one analog input of the analog to digital converter with successive approximations integrated into the microcontroller.

Figure 3 depicts a typical analogical input circuit.

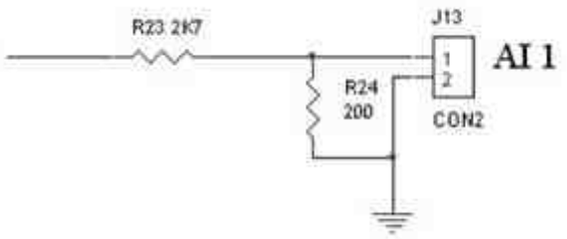

Fig.3 Analogical input circuit

The input voltage signal is available into the microcontroller as a 10 bits integer numeric value. The analog to digital converter is configured to function with a 5V reference voltage; so, the range 0..(5-5/1024=4,995) V will the converted into numeric values within 0..1023 range. The current signal supplied by the transducer will be converted into numeric values corresponding to 1..5 V range respectively 1024/5 = 205 ... 1023; the obtained resolution on transducer's working range is 1023-205 = 818 divisions. To improve the resolution of the signal read from the transducer is used the "circular buffer" mediation technique which contains the last 20 pieces of the signal; in this mode, a resolution of 10.000 divisions onto transducer's measurement range of analog inputs is obtained.

By removing the R24 resistor, which represents the current to voltage converter, the analogical input accepts voltage signals from transducers.

The analogical output circuits allow users to interface the electronic module with various modules which accept at the input voltage or current signals. Depending on the application, the user can configure the two analog outputs for numeric values calculated for the transducers connected at the analog inputs or for indirect measured values. The electronic module's analogical outputs use the two Capture/Compare/PWM modules integrated into the microcontroller; these modules are programmed in the PWM mode allowing a width modulated signal with 0 V and 5 V levels to be obtained, the duty cycle's resolution of 10 bits (1024 values) and a frequency of 19.53 kHz for the output signal.

The logical signal, width modulated, present at the output of the PWM module is applied to a first order low pass filter endowed with an output buffer, which is built with operational amplifier in repeater connection. The output of the low-pass filter is the analog output signal of the electronic module. In other words, the PWM signal, with constant period and duty cycle proportional with the contained information, is converted into analog signal using the first order low-pass filter.

Every analog output is endowed with a two terminal connector at which ground and user desired range analogical output signal are connected.

Figure 4 depicts the typical analogical output.

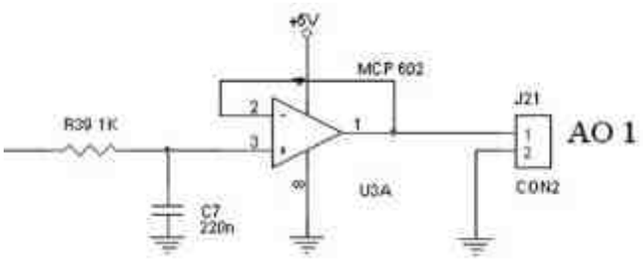

Fig.4 Analogical output circuit

3.3. The digital circuits

The digital input circuits can read the state of micro contacts, stroke limiters, level indicators a.o.

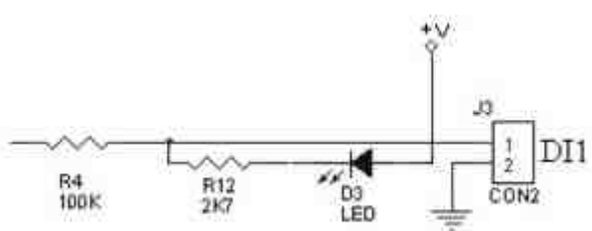

Fig.5 Digital input circuit

Figure 5 shows the schematic of a digital input circuit. The external connector offers two pins, input pin and ground pin. In normal functional conditions, when the switch connected at the digital input is triggered, the state LED lights up and the corresponding bit into the microcontroller port register is being reseted.

The digital output circuits can control electro hydraulic devices like distributors, electro valves and other.

Figure 6 shows the schematic of a digital output circuit.

The digital output consists of a high-side switch BTS409 capable to power the electro hydraulic element, supplying it with 2A current.

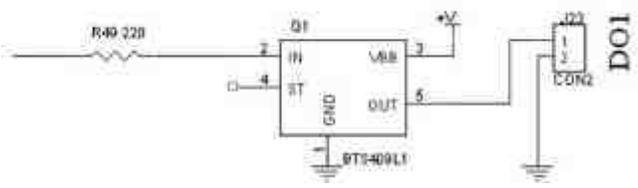

Fig.6 Digital output circuit

3.4. The communication interface

The serial communication allows, using some corresponding level adaptors, the communication with the electronic module using serial communication standards RS232, RS485 and RS422.

The communication connector endows the internal 5V DC regulated power supply, used to power the level adaptor needed for the communication standard, RX and TX TTL level signals, the transmission line (module output) and the receiving line (module input); for the multipoint communication lines an adaptor's working state between receiving and transmission regime selection signal is needed.

The working regime selection signal is a TTL level signal called DIR (direction).

3.5. The local interface

The electronic module is endowed with a *local interface* that includes an alphanumerical LCD display with two rows of twenty characters each and background light, and a four keys input terminal (OK used to save the value or to select a menu, UP used to increment the value or to navigate into the menu, DOWN used to decrement the value or to navigate into the menu, ESC used to exit the value editing mode or to exit from the menu).

The local interface is used to supervise the functionality of the electronic module; the same thing can be made also over the communication bus.

The electronic module has a header type connector, used for programming the microcontroller, ICSP header *(In Circuit Serial Programming)*.

The microcontroller operates with a clock generated by a 20 MHz quartz oscillator which corresponds to an execution period of 200 ns for one instruction.

4. Program Description

The control program, written in the flash memory of the microcontroller, has been developed using the programming language ANSI C. The program consists in a initializing sequence of the integrated peripherals in the microcontroller, the main loop which consists in a state machine implementing the functionality of the electronic module and the interrupt treating routine, which realize: analog acquisition, the real time clock, the actualization of the output circuits and handling of the emission/reception buffers for serial communication.

The PIC16F877A microcontroller, which is contained in the electronic module, manage the interrupts generated by various peripherals when certain events occur, by saving into the hardware stack of program counter and deviating the instruction sequence execution at a fixed program memory location: 0x004 address, where the programmer inserts the interrupt handling code and as last instruction, ***reti*** (the return from interrupt instruction); the ***reti*** instruction continues the program execution from its interrupt point by recalling from stack the program counter. There is to mention that at the beginning of interrupt handling routine, the possibility of another interrupt occurring the interrupt routine execution, is deactivated; the possible interrupt will be memorized and handled later. A typical interrupt routine contains the main program context saving, the generated interrupt source identification, the determination of the event that generated the interrupt, handle of the respective interrupt, recalling the context of the existing situation at interrupt moment and return from interrupt into normal flux of execution.

The implemented interrupt routine handles the interrupts generated by the following peripheral equipments integrated into the microcontroller:

- the 16 bits timer TMR1, is used for 1 ms clock generation. In the initializing sequence, *TMR1* is configured to increment at a 200 ns delay (instruction clock) and the interrupt generation when an overflow event occurs (the *TMR1* content passes from the 0xFFFF value to the 0x0000 value); in the interrupt routine the content of the timer is set to *t1ms* value which allows the overflow event to occur with 1 ms delay *(0xFFFF t1ms) x 200 ns = 1 ms;*
- the analog to digital converter is configured to generate a interrupt when the conversion's result is available; then, after taking over the conversion's result, the next readable analog input is chosen;
- the USART module is configured to generate interrupts when a character has been transmitted / received; the transmission of a character activates the pass to the next character to be transmitted from the transmission buffer, when the receiving of a character means the receiving buffer actualization with the received character. The ending of the transmission is signaled to the interrupt routine by the presence of a 0 ASCII code in the transmission buffer; the transmission ending is signaled to the main program by setting the TXIE bit (transmission interrupt enable) to 0 value. There is to mention that there are two pointers, one at the transmission buffer and one at the receiving buffer, that marks the current character, received or to be transmitted.

The 1 ms interrupt handling routine has the next duties:

- The update of the real time clocks used for processes in time synchronization.
- The analog to digital conversion start.
- The 1 ms interrupt initialization by loading into TMR1 the *t1ms* value and resetting the *T1IF* interrupt flag.

The analog to digital converter interrupt handling routine implements the next duties:

- Fetching the conversion result for the current analog input.
- The current analog input analog signal numeric filtering.
- Establishing the analog input that will be handled at the next interrupt as current analog input.
- The analog to digital converter interrupt initialization by resetting the *ADIF* interrupt flag.

The main execution loop contains a state machine which implements the electronic module functionality.

When needed, local control loops can be closed by implementing them into the software of the microcontroller and into its main execution loop.

5. Experimental Results

The electronic module provides the control of pumps and electroventils involved in the technological process of blending, the receiving of data referring at weight from the automatic scale device as well as the interface with the expert system for determining the blending recipes.

The architecture of the communication software and data base are integrated in the informatics system type “distributed multitier applications” which means multilevel distributed applications (Figure 7). In order to obtain new improved performances to the beneficiary informatics system will be added a new informatics level -the “mechatronic tier”.

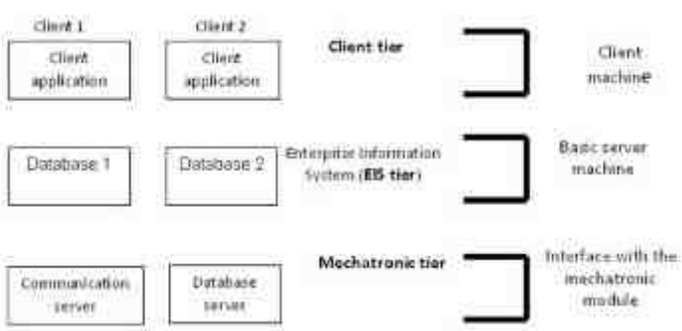

Fig.7 The architecture of the computerized system type distributed multitier applications

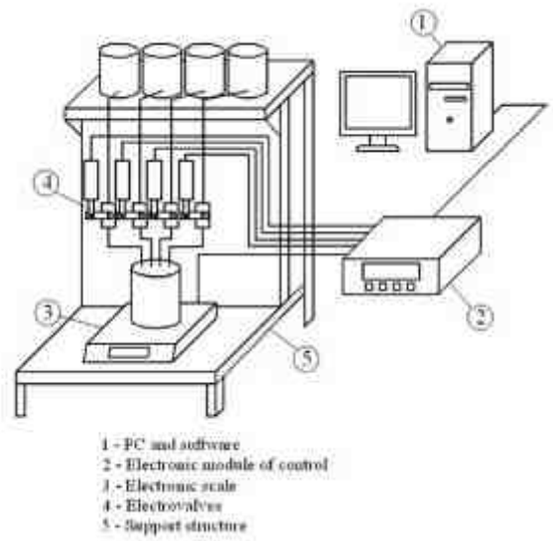

Fig.8 The experimental model of the gravimetric batcher of the informatics system used in the process of production of blended wines.

The mechatronic equipment for gravimetric batcher, presented in Figure 8, is one of the applications in which the “mechatronic tier” is integrated in the classical architecture of the “distributed multitier applications”.

References

[1] Ionescu G, Dobrescu R. “Transducers for industrial automations”, vol I, Technic Press, Bucharest 1985, pp.181-183
[2] M.Ciugudean, V.Tiponut “Linear integrated circuits. Applications”, Facla Press, Timisoara 1986
[3] www.microchip.com,
[4]http://www.omg.org/technology/documents/formal/uml. htm
[5] http://www.modbus.org

THEORETICAL AND EXPERIMENTAL RESEARCH ABOUT MECHATRONIC SYSTEMS USED FOR DRIVING, ADJUSTING AND CONTROL OF THE PRESSURE-FLOW PARAMETERS AT SOME HYDRAULIC AND PNEUMATIC EQUIPMENT

CERCETARI TEORETICE SI EXPERIMENTALE ASUPRA SISTEMELOR MECATRONICE DE ACȚIONARE, CONTROL SI REGLAJ AL PARAMETRILOR PRESIUNE-DEBIT LA ECHIPAMENTE HIDRAULICE SI PNEUMATICE

eng. Mircea RADULESCU[*], eng. Ionita NICULAE[**],
eng. Danut ROTARU[**], eng. Constantin ANGHEL [***], ph.d.eng. Adrian MIREA [****]

[*]*SC HERVIL SA*
[**]*INOE 2000 - IHP*
[***]*INCDMTM*
[****]*SC ROMFLUID SA*

Abstract: *The paper presents three mechatronic systems of driving, adjusting and control of pressure-flow parameters in some hydraulic and pneumatic equipment, that were realized in INNOVATION PROGRAM by SC HERVIL SA together with its partners - INOE 2000 - IHP, INCDMTM and SC ROMFLUID SA. All three systems are based on electromechanical apparatus which have new constructive and functional solutions.*

Taking into account the current guidelines which require working parameters of the mechanisms operated to be established by mechatronic systems, and also the use of proportional elements as simple and constructive but more reliable, SC Hervil SA together with its partners (INOE 2000 - IHP, INCDMTM and SC ROMFLUID SA) has realised in INNOVATION PROGRAM three mechatronic systems of driving, adjusting and control of pressure-flow parameters in some hydraulic and pneumatic equipment: a mechatronic system for adjustment and control of the hydraulic pressure with proportional normally open high flow valve, a mechatronic system for regulating the pneumatic pressure acting with a proportional normally open valve with electrohydraulic command and a system for regulating the flow through the power supply frequency variation of a double electromagnetic pump.

FEATURES
nominal diameter: DN6
maximum pressure: 200bar
nominal flow: 20l/min
voltage power: 220V
pressure sensor: 0-250bar

Figure 1 presents the prototype of the mechatronic adjustment and control system of the hydraulic pressure. It consists of: proportional normally open high flow valve, electronic control unit (which compares the actual pressure in the system with the required pressure and depending on the result, commands the valve's electromagnet) and a pressure transducer with operating field 0…250bar and current output 4...20mA, connected to the electronic control unit. Valve is mounted on a base plate through which the hydraulic pressure, tank and the consumer are connected to the valve. The pressure transducer is mounted on the base plate, in a circuit connected to the consumer, to detect pressure in the system as close to the valve.

Fig.1

The proportional normally open high flow valve used in this system has a constructive and functional solution that is a novelty - patent No.121971/ 30.09.2008. It is presented in figure 2, and it is composed of a body 1, which has attached to it a proportional force electromagnet 8 and inside are mounted: the distribution spool 6, which has an axial hole drainage collection, command plunger 2, distribution sleeve 4, initial position establishing spring 7. Also in body 1 are made holes: **P** who links to external sources of pressure, **T** who links for return to the fluid reservoir and **A(C)** who links for consumer circuit. In the body 1 is performed the duct **b**, through which the regulated pressure in the consumer circuit can reach the surface of command piston 2. Position of the distribution sleeve 4 is determined by the bushes 3 and 5 which are fixed in the package with distribution sleeve 4 in the body 1, they are also intended to bring the working fluid on shoulders of the distribution spool 6, through some own interior ducts.

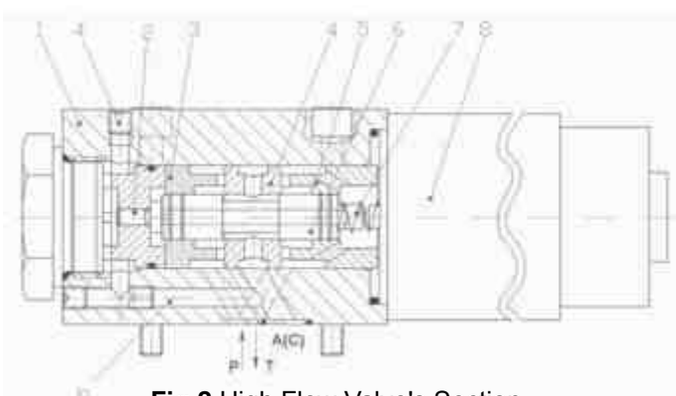

Fig.2 High Flow Valve's Section

Mode of operation:

In the initial situation, fluid is fed to the hole P from which it penetrates through the interior ducts of the bush 3 and finding the distribution spool 6 moved at maximum to the left because of the spring 7, go in hole **A(C)** to a consumer through distribution sleeve 4, the path to the hole **T** being closed by the same distribution spool 6.

Due to external loads, the hydraulic powered consumer enhances the pressure at hole **A(C)** to a value that is applied on the command plunger 2, moves the distribution spool 6 to the right, balancing the electromagnet's 8 force, which is predominant.

At this moment, the distribution spool 6 is placed in a median position to distribution sleeve equal opening communication slits of the hole **A(C)** to **P** and **T**, making the pressure in the hole **A(C)** depending directly proportional to the electromagnet's 8 force, and therefore to the current supply.

At current growth, the electromagnet's 8 force increases, which moves on the distribution spool 6 to the left, making it grow the pressure in the circuit **A(C)**, until the command plunger 2 restores again in a position of balance the distribution spool 6, but at the increased value of the pressure.

If you decrease the command current, the electromagnet's 8 force also decreases, the plunger 2 moves to the right the distribution spool 6, making the communication **A(C)** to **T**, the pressure in **A(C)** starting to decline until the electromagnet's 8 force is balanced by the force made on the plunger 2.

The distribution spool 6 is repositioned in equilibrium to distribution sleeve 4, but at a lower pressure in the hole **A(C)**. Thereby proportionality between the pressure of hydraulic circuit **C** and the command current of the valve is achieved.

If on the response pressure circuit **b** is inserted a pressure sensor, electrically connected to an electronic control unit, the system is in closed loop with auto adjustment.

This hydraulic device can control and adjust the pressure proportional at the hole **A(C)**, with an applied command current of the electromagnetic force, regardless of the flow and pressure installed in the hole **P**.

Proportional normally open high flow valve used has the following advantages:

- Has small size and large flow transfused
- Balancing the electromagnetic force and feedback from the controlled pressure is independent of area crossing flow valve
- Has a simple construction and easy to run from the technology, because the bushes in which the distribution spool slides is made of sections
- Low price cost.

Experimental results:

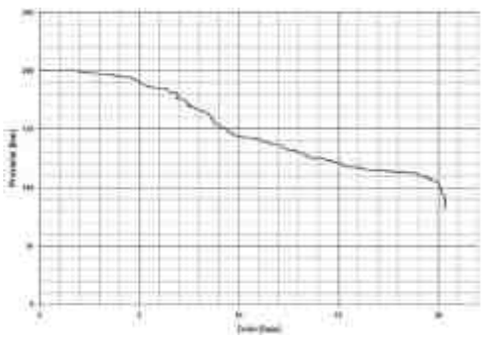

Fig.3 Pressure-flow chart

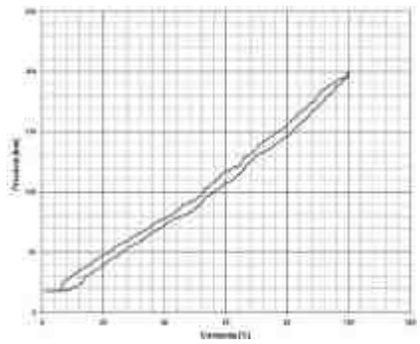

Fig.4 Hysteresis chart

The prototype of the mechatronic system for driving, adjusting and control of pneumatic pressure is presented in figure 5. It consists of: a proportional pneumatic valve with electrohydraulic command, electronic command unit (which compares the actual pressure in the system with the required pressure and depending on the result, commands the valve's electromagnet) and a pressure transducer with operating field 0…10bar and current output 4...20mA, connected to the electronic control unit. The valve is connected to the air pressure source through a compressed air hose. The pressure transducer is connected at the valve with a T body, in order to detect the pressure as close to the valve.

Fig.5

FEATURES
nominal diameter: DN6
maximum pressure: 6 bar
regulated pressure: 0…5,8 bar
voltage supply: 220V
pressure sensor: 0-10bar

Pneumatic valve with electro-hydraulic command whose constructive and functional solution is a novelty (patent application no. A/00098/2006) is presented in fig.6

Valve consists of the following: a lower body 1, having a hole for air entry **i** and for the air exit **e**, which communicates with an air chamber b, between that is located a valve adjustment with the rod 2, pressed on its seat by a spring 3 an elastic membrane 4 in permanent contact with the valve rod 2, fixed between lower body 1 and upper body 6, with screws 5. In the upper body 6 is located a room full of oil, closed by a piston 7 with seal and a filler plug 11.

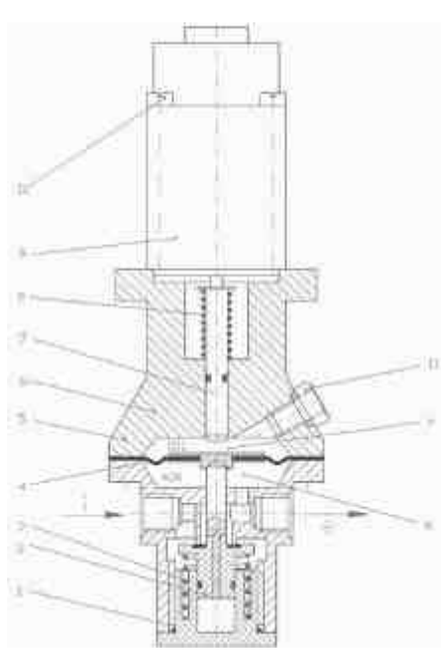

Fig.6 Pneumatic valve's section

On the upper body 6 is a force electromagnet 9, fixed with set screws 10, whose rod is permanently in contact with the plunger 7 thanks to the spring 8. At the hole **i** is attached a source of compressed air, and at the exit hole **e** the pneumatic consumer is attached. Valve is commanded using an electronic device, which feed the power, with adjustable intensity, the electromagnet 9. At zero electricity supply, electromagnet 9 does not provide any force on the plunger 10, which does not exert any pressure in the oil chamber **a**. Membrane 4 is not pressed on the valve rod 2, which remains closed and makes that at the exit hole **e**, so in the air chamber **b**, the pressure to be zero.

Increasing the current supply, the electromagnet 9 creates a force proportional with the current, resulting through the piston 7 an oil pressure in the chamber **a**, which applied on the membrane 4, makes the valve 2 to open. At this time the hole **e**, so in the air chamber **b**, the pressure increases to balance the oil pressure in the chamber **a**. On further increase in current supply, the oil pressure increases making the valve 2 to increase its opening by the membrane 4, with the immediate reaction of air pressure increase in the hole **e** to balance the oil pressure. If electric current command decreases, the force on the piston drops, the oil pressure is reduced, valve 2 is reducing its opening and the air pressure at the hole **e** reduced accordingly, until a new balance with the oil pressure is established.

Figure 9 presents the prototype of the mechatronic system for flow controlling and adjusting. It consists of: electromagnetic pump with two chambers, electronic control block (which compares the actual flow of the system with the required flow and depending depending on the result changes the feed frequency of the pump coil) and a flow sensor electrically connected to electronic command unit. The flow transducer is connected to the exit hole of the pump through a hose.

Valve, has the following advantages:
-constructive and technological simplicity
- silent and low cost price
-provides high stability at adjusting and a proper proportionality

Experimental results:

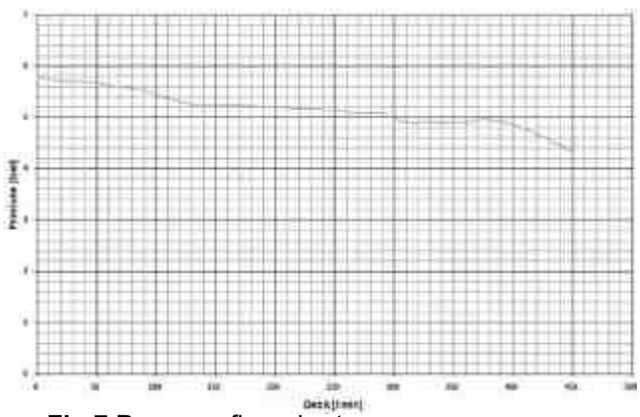

Fig.7 Pressure-flow chart

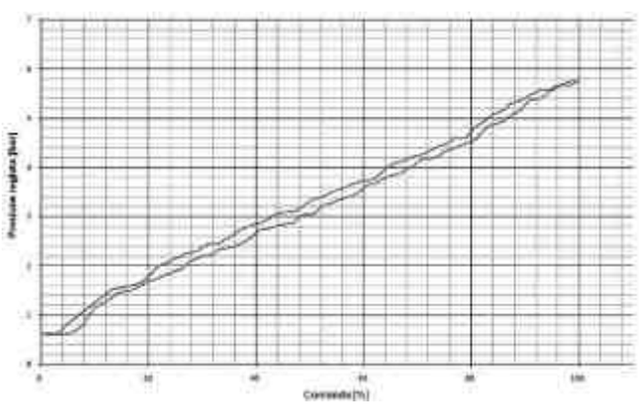

Fig.8 Hysteresis chart

Fig.9

FEATURES
maximum pressure: 1,5bar
nominal flow: 1-15l/min
voltage supply: 220V
flow sensor: 0-18 l/min

Electromagnetic pump with two chambers is based on a new constructive and functional solution (patent application No.A/00097/2006). In figure 10 is presented a longitudinal section through the pump. The pump consists of a tubular cylindrical body 1, inside which is an electric coil 2 and a sliding core 3, on whose ends are fixed the elastic membranes 4, which close two compression chambers, one consisting of a fixed armature 5 and the aspiring cover 10, and the other consists of fixed armature 6 and the exhausting cover 11. On the sliding core 3 is a return spring 7. The admission of the fluid into the two compression chambers is done through the valves 9 and exhaustion is done through valves 8. All package is tight with bolt studs 12 and 13.

When powering the electric coil 2, the core 3 is sliding to the left moving in the direction the elastic membranes 4, obliging the one on the left to evacuate a dose of fluid in hole **b** through valve 8, and that of right to aspire a dose of fluid from hole **a** via valve 9.1. When the supply power stop powering the coil 2, the spring 7 moves the core 3 on the initial position and determine the left membrane 4 to aspire a dose of fluid from the hole **a** through valve 9, and the right membrane 4 to evacuate a dose of fluid in hole **b** through the valve 8.1. Supply power frequency is variable by an electronic device external to the pump, which makes the flow of evacuated fluid to depend directly on the oscillation frequency of the sliding core.

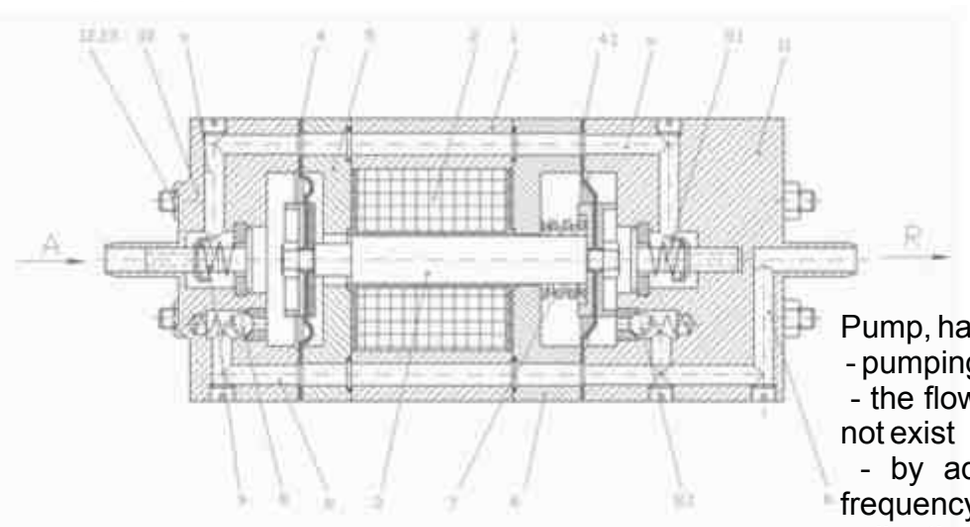

Fig.10 Electromagnetic pump's section

Pump, has the following advantages:
- pumping flow is double
- the flow surging theoretically does not exist
- by adjusting the supply power frequency of the electromagnetic coil, the pumping flow can be adjusted
- very compact construction

Experimental results:

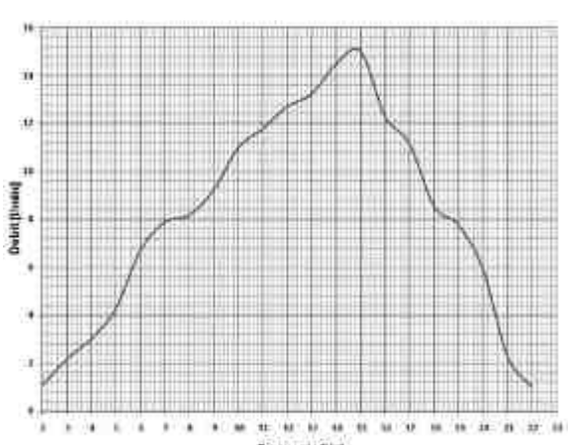

Fig.11 Flow-frequency chart

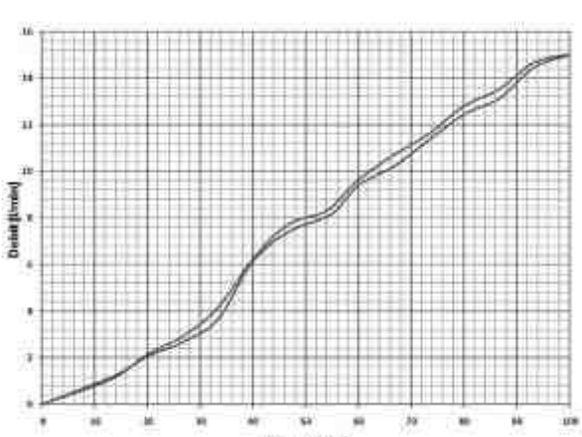

Fig.12 Hysteresis chart

Electronic command unit

Electronic command unit of the mechatronic systems has been developed based on the needs arising from the design stage and changes occurring during the experiments of the main functional blocks.

The scheme includes four specific modules that are:

* Power supply
* The UC with microcontroller, keypad and display
* PWM power circuit
* Conditioning and identification analog PID circuit

The unit's block diagram is illustrated in figure 13:

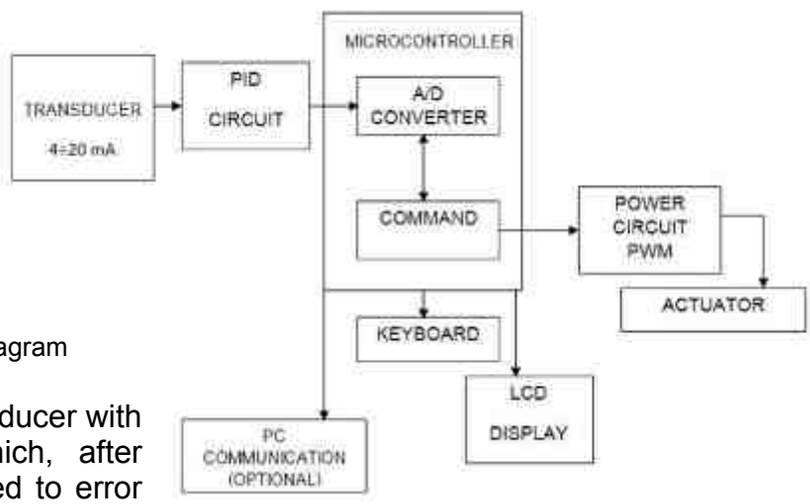

Fig.13 Command's Unit Block Diagram

Pressure is measured with a transducer with 4-20mA current output type which, after conversion into a voltage is applied to error amplifier and a circuit analogical PID identification with specific parameters that could be adjusted by means of some potentiometers. The circuit is provided with jumpers who can stop the adjustment loop in order to establish the open loop response and the process identification. Power supply is classical, made with a transformer with two separate involution for providing galvanic insulation.

Bibliography:

1. Marin, V., Marin, Alex. Automatic hydraulic systems. Construction, adjustment and exploitation Technical Publishing house Bucuresti, 1987.
2. Oprean A., s.a. “Actionari si automatizari hidraulice. Modelare, simulare, incercare”, Editura Tehnica, Bucuresti, 1989
3. Patent No. 121971/ 30.09.2008
4. Patent application No. A/00097/2006
5. Patent application No. A/00098/2006

Electronic control circuit is built around a PIC18F4520 microcontroller - S which is interconnected to a 4x4 character keyboard and a 4x16 character alphanumeric display for viewing and entering working parameters to work. Power circuit was produced using MOSFET transistors with very low Ron SUM110N04 type for increasing efficiency and reducing power losses. Was also provided optical isolation of the power circuit from the command circuit to minimize interference due to unwanted switching current through the inductive load.

Compared to the existing knowledge, the project has achieved three mechatronic systems for regulating and controlling the working parameters "pressure-flow" using completely new construction solutions, considered more efficient and cheaper, which can successfully compete with similar products of famous companies in hydraulic and pneumatic equipment with remote command. Because of the simplifying constructive solutions of hydro-pneumatic execution elements and the completion of hydro-pneumatic automatic control of working parameters these systems have the advantage of low cost and a high performance and reliability that will make possible the successful competing similar products of famous companies in the equipment hydraulic and pneumatic field.

RECUPERAREA DE ENERGIE LA STANDURILE DE ANDURANȚĂ A MAŞINILOR VOLUMICE ROTATIVE

RECOVER ENERGY AT THE ENDURANCE STANDS OF THE ROTARY VOLUMETRIC MACHINES

dr.ing. Teodor Costinel POPESCU*, drd.ing. Ioan LEPADATU*,
dr.ing. Dragos Daniel ION GUTA*
*Institutul de Cercetări pentru Hidraulică şi Pneumatică- IHP Bucureşti

Abstract: *The endurance tests of the rotary and linear volumetric machines involve a high consumption of energy cause are long processes and are performed at nominal power. The energy consumption may be reduced by a simultaneous test of two volumetric machines connected in close hydraulic circuit, one working as a pump and the other as a motor. The hydraulic energy generated by the pump is used again for engaging the pump by means of the motor. In this way the power supplied to the system must cover the difference between the power consumed by the pump and that supplied by the motor. This energy saving method is known in the professional literature under the name of „recycling the hydrodynamic power". The paper presents the experimental results of the tests performed on a micro endurance stand for rotary volumetric machines, these show the energy saving of the power consumed by the system, in the situation in which this works with an energy recovery, which is different from that when it works without any energy recovery. The energy saving it is also proven by means of a simulation model in AMESim. The operational scheme of this system may be applied as well to big endurance stands for rotary volumetric machines and to endurance stands for linear volumetric machines.*

1. Considerații teoretice

În literatura de specialitate [1] se cunosc trei tipuri de standuri pentru încercări de anduranță a maşinilor volumice rotative, care funcționează pe principiul recupererii de putere:

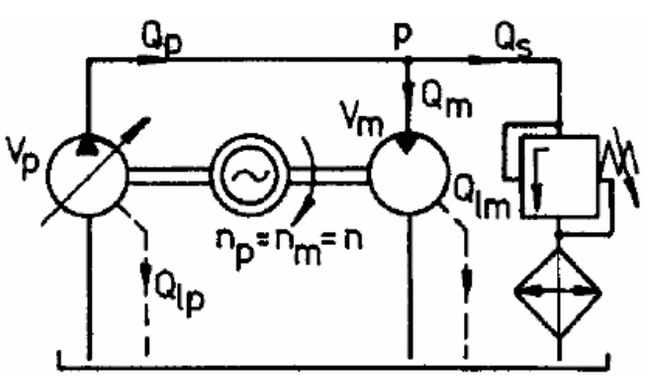

Fig.1.a- Stand cu compensare mecanică a pierderilor şi o maşină reglabilă

a) tipul de stand din fig.1.a, în circuit deschis, care este un stand cu compensare mecanică a pierderilor volumice Q_{lp} şi Q_{lm}. El conține două maşini volumice, o pompă şi un motor, cu capacități diferite, V_p şi V_m, pompa având capacitate reglabilă; un motor electric, care antrenează cele două maşini volumice cu tura'ie egală $n_p=n_m=n$; o supapă de reglare a presiunii şi un răcitor;

b) tipul de stand din fig.1.b, care este un stand cu compensare mecanică a pierderilor volumice Q_{lp} şi Q_{lm} ale unei pompe şi un motor de capacități fixe, egale, $V_p = V_m$, în circuit închis. Standul mai conține o pompă de alimentare antrenată de un motor electric cu turație constantă; o supapă de siguranță prereglată la 8 bar; o supapă de sens; un motor electric, care antrenează pompa din circuitul închis cu turația n_m; un reductor de turație cu raport de transmisie "i"; o supapă de reglare a presiunii şi un răcitor;

c) tipul de stand din fig.1.c, în circuit deschis, care este un stand cu compensare hidraulică a pierderilor volumice Q_{lp} şi Q_{lm}. Standul conține două maşini volumice, o pompă şi un motor, de capacități constante diferite, V_p şi V_m, cuplate mecanic; un drosel reglabil, pe refularea pompei; o pompă auxiliară, antrenată de un motor electric; o supapă de reglare a presiunii şi un răcitor.

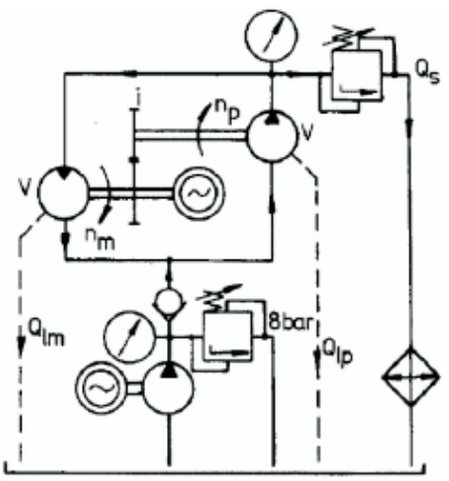

Fig.1.b- Stand cu compensare mecanică a pierderilor şi două maşini nereglabile

Dacă debitul furnizat de pompă, Q_p, este egal cu cel consumat de motor, Q_m, presiunea de refulare a pompei, p, este practic nulă. Dacă capacitatea pompei, V_p, este mărită faţă de capacitatea motorului, V_m, presiunea de refulare creşte pentru a evacua debitul excedentar prin jocuri şi interstiţii.

Puterea furnizată de electromotor, N_e, reprezintă diferenţa dintre puterea absorbită de pompă, N_p, şi cea furnizată de motor, N_m:

$$N_e = N_p - N_m \qquad (1)$$

în care $N_p = \dfrac{p \cdot Q_{tp}}{\eta_{tp}} = \dfrac{p \cdot n \cdot V_p}{\eta_{tp}}$ (2)

şi $N_m = p \cdot Q_{tm} \cdot \eta_{tm} = p \cdot n \cdot V_m \cdot \eta_{tm}$ (3)

Rezultă

$$N_e = p \cdot n \cdot V_m \left(\frac{V_p}{V_m} \cdot \frac{1}{\eta_{tp}} - \eta_{tm} \right) = N_{tm} \left(\frac{V_p}{V_m} \cdot \frac{1}{\eta_{tp}} - \eta_{tm} \right) \qquad (4)$$

Această putere este minimă dacă debitul deversat prin supapă este nul, deci

$$Q_p = n \cdot V_p \cdot \eta_{vp} = Q_m = n \cdot \frac{V_m}{\eta_{vm}} \qquad (5)$$

Rezultă $\left(\dfrac{V_p}{V_m} \right)_{\min} = \dfrac{1}{\eta_{vp} \cdot \eta_{vm}}$ (6)

şi $\left(\dfrac{N_e}{N_{tm}} \right)_{\min} = \dfrac{1}{\eta_{tp} \cdot \eta_{vp} \cdot \eta_{vm}} - \eta_{tm}$ (7)

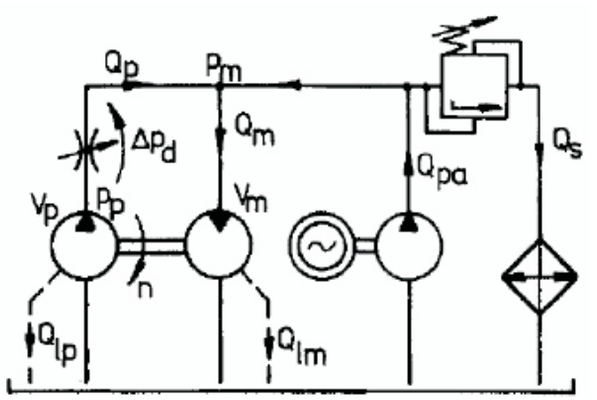

Fig.1.c- Stand cu cu compensarea hidraulică a pierderilor

De exemplu pentru $\eta_{vp} = \eta_{vm} = 0{,}95$ şi $\eta_{tp} = \eta_{tm} = 0{,}90$, este necesar ca

$\left(\dfrac{V_p}{V_m} \right)_{\min} = 1{,}1$ şi $\left(\dfrac{N_e}{N_{tm}} \right)_{\min} = 0{,}33$

Dacă maşinile au capacitate constantă şi egală, Vp = Vm = V, electromotorul şi motorul hidraulic trebuie să antreneze pompa printr-un multiplicator de turaţie cu raportul de transmisie $i = n_p / n_m > 1$ (fig.1.b). În acest caz

$N_p = p \cdot i \cdot n_m \cdot \dfrac{V}{\eta_{tp}}$ (8), $N_m = p \cdot n_m \cdot V \cdot \eta_{tm}$ (9)

şi

$$N_e = N_p - N_m = p \cdot n_m \cdot V \left(\frac{i}{\eta_{tp}} - \eta_{tm} \right) = N_{tm} \left(\frac{i}{\eta_{tp}} - \eta_{tm} \right) \qquad (10)$$

deci $\dfrac{N_e}{N_{tm}} = \dfrac{i}{\eta_{tp}} - \eta_{tm}$ (11)

Debitul evacuat prin supapa de prescriere a presiunii de încercare (supapa de reglare a presiunii) se calculează din ecuaţia de continuitate

$$Q_p = i \cdot n_m \cdot V \cdot \eta_{vp} = Q_m + Q_s = n_m \frac{V}{\eta_{vm}} + Q_s \qquad (12)$$

deci $Q_s = n_m \cdot V \left(i \cdot \eta_{vp} - \dfrac{1}{\eta_{vm}} \right)$ (13)

sau $\dfrac{Q_s}{Q_{tm}} = i \cdot \eta_{vp} - 1 \geq 0$ (14)

Valoarea minimă a raportului de transmisie se determină din condiţia $Q_s = 0$:

$$i_{min} = \frac{1}{\eta_{vp} \cdot \eta_{vm}} > 1 \qquad (15)$$

Puterea minimă furnizată de electromotor este identică cu cea corespunzătoare cazului anterior.

Dacă $i = 1{,}15$, $\eta_{tp} \cong \eta_{tm}$ şi $\eta_{vp} \cong \eta_{vm} = 0{,}95$,

$Q_s/Q_{tm} = 0{,}04$ şi $N_e/N_{tm} \cong 0{,}38$

Compensarea hidraulică a pierderilor se realizează cu o pompă auxiliară, conf schemei din fig.1.c, Dacă debitul supapei este nul, din ecuaţia de continuitate,

$$Q_m = \frac{n_m \cdot V_m}{\eta_{vm}} = Q_p + Q_{pa} = n_m \cdot V_p \cdot \eta_{vp} + Q_{pa} \quad (16)$$

rezultă turaţia pompei şi motorului:

$$n_m = n_p = \frac{Q_{pa}}{\frac{V_m}{\eta_{vm}} - V_p \cdot \eta_{vp}} \quad (17)$$

unde Q_{pa} este debitul pompei auxiliare. Din sistemul de ecuaţii

$$N_p = \frac{Q_p \cdot p_p}{\eta_{tp}} = N_m = Q_m \cdot p_m \cdot \eta_{tm} \quad (18)$$

$$p_p = p_m + \Delta p_d \quad (19)$$

se deduce căderea de presiune pe motor funcţie de căderea de presiune pe drosel, Δp_d:

$$p = \frac{\Delta p_d}{\frac{V_m}{V_p} \cdot \eta_{tp} \cdot \eta_{tm} - 1} \quad (20)$$

Se aleg sau se reglează capacităţile maşinilor probate astfel încât

$$\frac{V_m}{V_p} \cdot \eta_{tp} \cdot \eta_{tm} > 1 \quad (21)$$

deci capacitatea motorului trebuie să fie întotdeauna mai mare decât capacitatea pompei:

$$\frac{V_m}{V_p} > \frac{1}{\eta_{tp} \cdot \eta_{tm}} > 1 \quad (22)$$

Dacă numitorul relaţiei (22) este foarte mic, o cădere de presiune mică pe drosel generează presiuni mari de probă. Puterea consumată de stand (puterea electromotorului) este egală cu puterea pompei auxiliare.

$$N_c = N_e = N_{pa} = p_m \cdot Q_{pa} = n_m \cdot \Delta p_d \cdot \eta_{tpa} \cdot \frac{\frac{V_m}{\eta_{vm}} - V_p \cdot \eta_{vp}}{\frac{V_m}{V_p} \cdot \eta_{tp} \cdot \eta_{tm} - 1} \quad (23)$$

De exemplu, dacă

$\frac{V_m}{V_p} \cdot \eta_{tp} \cdot \eta_{tm} = 1{,}025$, $p_m = 40 \cdot \Delta p_d$

O cădere de presiune pe drosel de 10 bar conduce la o presiune de probă a motorului $p_m = 200\ bar$, iar $p_p = 210\ bar$. Admiţând $\eta_{tp} = \eta_{tm} = 0{,}9$, rezultă $\frac{V_m}{V_p} \cong 1{,}265$;

dacă $V_p = 125 \frac{cm^3}{rot}$, $V_m = 158{,}1 \frac{cm^3}{rot}$;

la $n = 1000 \frac{rot}{min}$ şi $\eta_{vp} \cong \eta_{vm} = 0{,}95$,

pompa auxiliară trebuie să furnizeze debitul $Q_{pa} = 0{,}795 \frac{l}{s}$, pentru $\eta_{tpa} \cong 0{,}9$,

pompa auxiliară consumă puterea $N_{pa} = 14{,}3\ kW$, în timp ce puterea teoretică a motorului probat este $N_{tm} = 52{,}7\ kW$,

deci $\frac{N_c}{N_{tm}} = 0{,}27$.

Schemele de încercare cu recirculare de putere sunt utilizate şi pentru încercările de lot ale maşinilor volumice de serie mare, îndeosebi a celor livrate pereche, pentru transmisii în circuit închis.

2. Dispozitiv modular pentru demonstrarea principiului recupererii de putere

Pentru diminuarea consumului energetic, foarte ridicat pentru standurile cu reglaj secundar utilizate la probele de anduranţă, s-a realizat, la scară redusă, un **modul demonstrativ de sistem hidraulic cu reglaj în primar**, cu recuperare de energie. Scopul realizării acestui modul este de a promova, pentru producătorii de maşini volumice (pompe şi motoare) realizarea unor standuri de anduranţă cu consum energetic redus.

Schema hidraulică de principiu a acestui sistem, utilizat la anduranţa maşinilor volumice rotative, este prezentată în fig.2 şi conţine: o pompă volumică fixă, cu capacitatea de 6 cm^3/rot (poz.2) şi un motor volumic fix (poz.3), cu capacitatea de 4 cm^3/rot, ambele cuplate la un motor electric (poz1), de 0,37 kW, cu turaţie constantă de

1375 rot/min; o supapă de reglare a presiunii (poz.4); un distribuitor hidraulic 4/3, cu comandă electrică (poz.5), un manometru (poz.6) şi un rezervor (poz.7).

Pentru testarea sistemului se utilizează numai poziţiile extreme de comutare a sertarului distribuitorului hidraulic 4/3 (fără poziţia de centru).

Când electromagnetul „b" al distribuitorului se acţionează, se realizează distribuţia „P" la „A" (pe „A" s-a montat un dop) şi „B" la „T", întregul debit al pompei este refulat prin supapă, motorul hidraulic se alimentează din bazin, antrenat fiind simultan cu pompa de către motorul electric, dar acesta nu generează moment mecanic şi nu „ajută" motorul electric de antrenare a celor două maşini volumice.

Când electromagnetul „a" al distribuitorului se acţionează, se realizează distribuţia „P" la „B" şi „A" la „T", (pe „A" rămâne montat dopul). Debitul refulat al pompei se împarte în: 5,5l/min, care intră în motorul hidraulic şi 2,75l/min, care sunt trecuţi prin supapa de reglare a presiunii. Motorul hidraulic este alimentat de pompă şi antrenat, simultan cu pompa, de electromotor. În această situaţie motorul hidraulic contribuie la producerea unei părţi din momentul mecanic necesar antrenării pompei volumice.

Modulul de testare a eficienţei energetice, executat pentru sistemele de acţionare hidraulice cu reglaj în primar, folosite ca standuri pentru probe de anduranţă a maşinilor volumice rotative, este prezentat în fig.3.

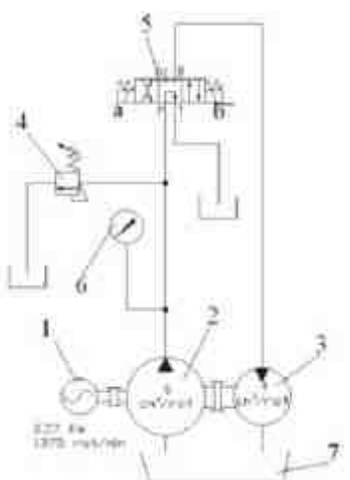

Fig.2: Schemă de principiu modul testare eficienţă energetică stand anduranţă cu recuperare de energie: 1-motor elelctric cu turaţie constantă; 2- pompă volumică fixă; 3-motor volumic fix; 4: supapă de reglare presiune; 5-distribuitor hidraulic 4/3; 6-manometru; 7-rezervor.

Fig.3- Modul testare eficienţă energetică stand anduranţă cu recuperare de energie, format din: motor electric de turaţie constantă de 0,37 Kw; pompă volumică cu roţi dinţate de 6cm^3/rot; motor volumic cu roţi dinţate de 4cm^3/rot; transmisie cu roţi dinţate cu raport de transmisie 1:1.

3. Modelul de simulare AMESim

Pentru studiul dinamicii modulului de testare s-a utilizat modelul de simulare în AMESim din fig.4. Modelul AMESim [2] conţine un motor electric inductiv, la care s-a introdus o sarcina pentru simularea momentului inerţial al rotorului şi frecărilor din maşina electrică.

Pentru simularea funcţionării sistemului, în variantele cu şi fără recuperare de energie, s-a introdus un cuplaj cu fricţiune, care poate fi deschis sau închis, în funcţie de valoarea semnalului de excitaţie (0, respectiv 1).

Pentru motorul hidraulic, există deasemenea posibilitatea modificării valorii sarcinii, prin modificarea parametrilor masei inerţiale ataşată arborelui acestuia.

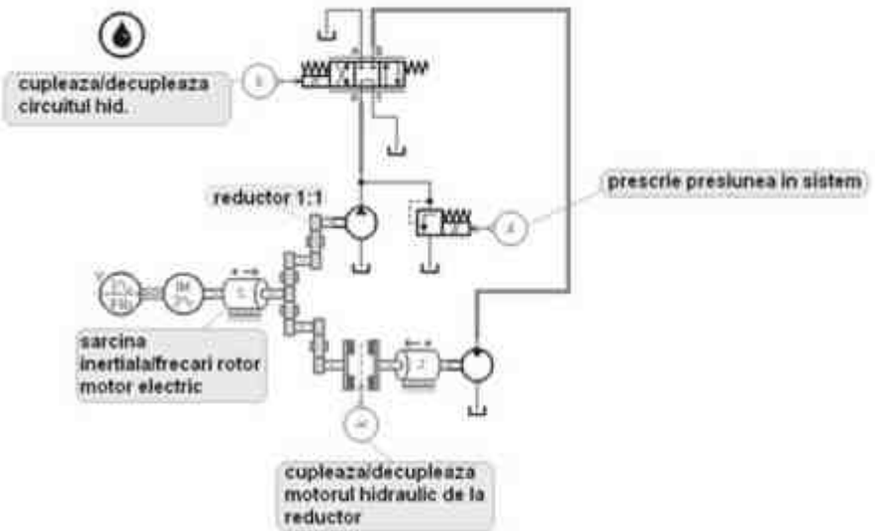

Fig.4- Model de simulare în AMESim a standului de anduranţă cu recuperare de energie.

Cuplarea şi decuplarea circuitului hidraulic al motorului volumic rotativ se realizează prin intermediul distribuitorului hidraulic, iar presiunea în sistem se prescrie din supapă.

Cele două regimuri de funcţionare a sistemului sunt cu motorul hidraulic cuplat (cu recuperare de energie) şi cu motorul hidraulic decuplat (fără recuperare de energie).

În modul de lucru "cuplat" se dă semnal "1" la cuplaj şi se setează supapa normal închisă pentru valoarea de 30 bar.

4. Rezultatele simularii dinamicii sistemului în AMESim

În graficul din fig.5 se observă că momentul motorului electric scade după ce ce turaţia motorului hidraulic devine egală cu turaţia motorului electric (după 0,1 s).

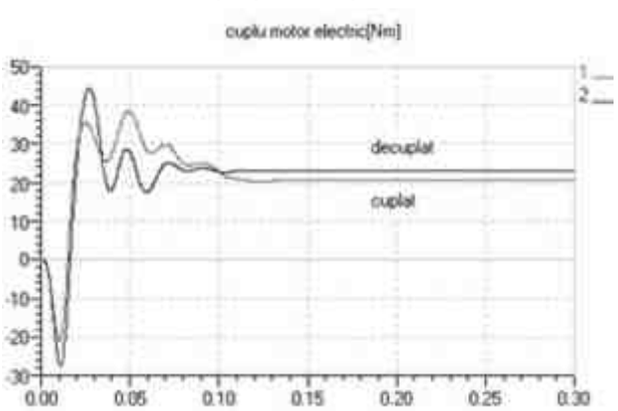

Fig.5- Variaţia în timp a cuplului motorului electric, decuplat/cuplat la motorul hidraulic.

În modul de lucru "decuplat" se setează semnalul de excitaţie al cuplajului la valoarea "0", pentru întreruperea legăturii mecanice dintre motorul electric şi motorul hidraulic. Se creşte apoi presiunea în sistem astfel încât să se obţină la arborele motorului hidraulic aceaşi viteză de rotaţie ca în cazul motorului hidraulic"cuplat". Astfel se pot compara cuplurile la arborele motorului electric, în cele două regimuri de funcţionare, în aceleaşi condiţii de încărcare a maşinilor volumice consumatoare.

În graficul din fig.6 se observă ca momentul la arborele ataşat reductorului scade după ce turaţia motorului hidraulic devine egală cu turaţia motorului electric (după 0,1 s).

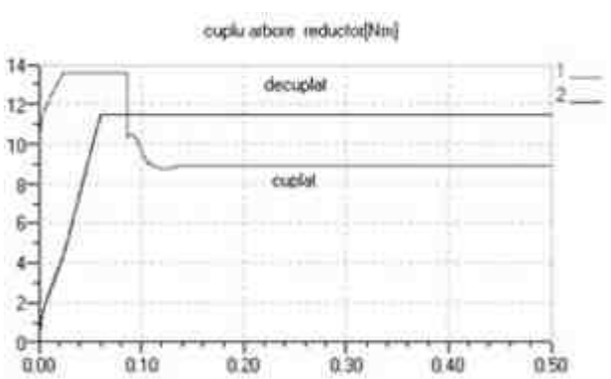

Fig.6- Variaţia în timp a cuplului la arborele reductorului; ME decuplat /cuplat la MH.

În graficul din fig.7 se observã timpul dupã care turaþia motorului hidraulic devine egalã cu turaþia motorului electric (0,1 s, "cuplat", respectiv 0,4 s, "decuplat" la motorul electric).

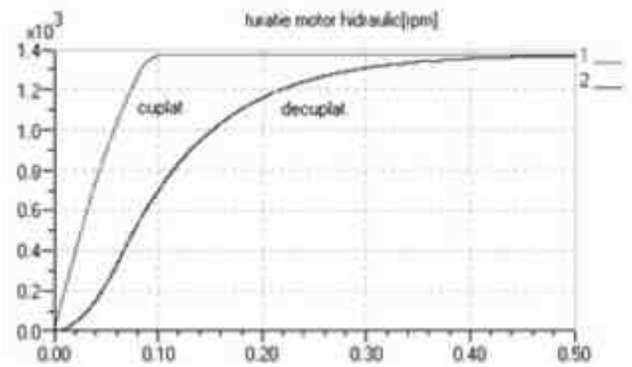

Fig.7- Variaþia în timp a turaþiei motorului hidraulic, decuplat/cuplat la motorulelectric.

În fig.8 se observã variaþia presiunii în nodul pompã-supapã-distribuitor.

În fig.9 se observã variaþia debitului prin pompã, motorul hidraulic º i supapa normal închisã

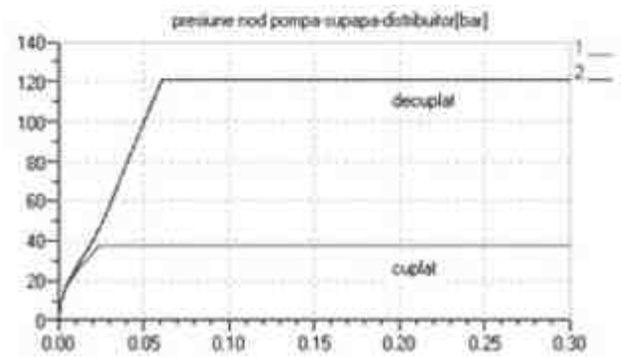

Fig.8- Variaþia presiunii în nodul pompã-supapã-distribuitor.

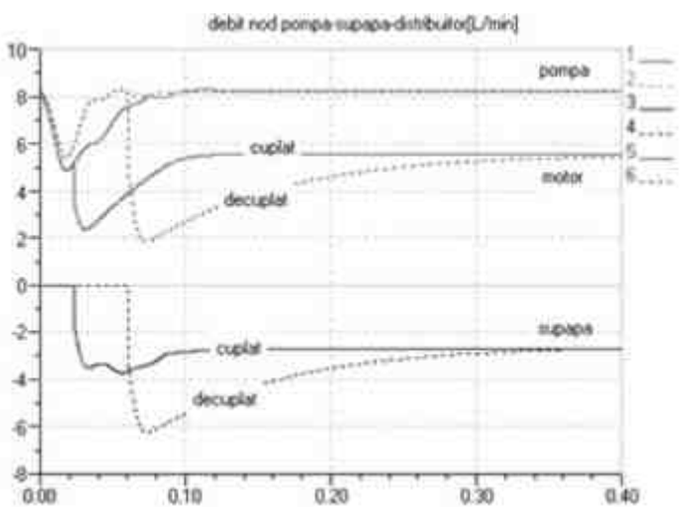

Fig.9- Variaþia debitului în nodul pompã-supapã-distribuitor.

5. Rezultatele încercărilor de laborator

Caracteristicile ridicate experimental [3] sunt prezentate în fig.10...fig.13.

S-au mãsurat: presiunea pe refularea pompei- p (bar); intensitatea curentului electric pe o fazã, absorbit de motor-I (A) º i turaþia motorului electric.

S-au calculat: puterea hidraulicã generatã de pompã-Ph (W); puterea absorbitã de motorul electric- Pa (W); puterea utilã generatã de motorul electric- Pu (W) º i puterea mecanicã generatã de motorul hidraulic- Pmh (W).

S-au utilizat urmãtoarele relaþii de calcul:

Puterea hidraulicã generatã de pompã (Ph), în care: P_h- puterea hidraulicã (W); V_p- capacitatea pompei (cm^3/rot; n-turaþia pompei (rot/min); P-presiunea pe refularea pompei (bar); $ç_p$-ramdamentul pompei (-); 612- factor adimensional.

$$P_h = \frac{V_p \cdot n \cdot p}{\eta_p \cdot 612} \qquad (24)$$

Puterea absorbitã de motorul electric- Pa (W), în care: Pa- puterea absorbitã (W); U-tensiunea de fazã (V); cosö =0,71.

$$P_a = 3U \cdot I \cdot \cos\varphi \qquad (25)$$

Puterea utilã generatã de motorul electric- Pu (W), în care: Pa- puterea absorbitã (W); $ç_{me}$- randamentul motorului electric.

$$P_u = P_a \cdot \eta_{me} \qquad (26)$$

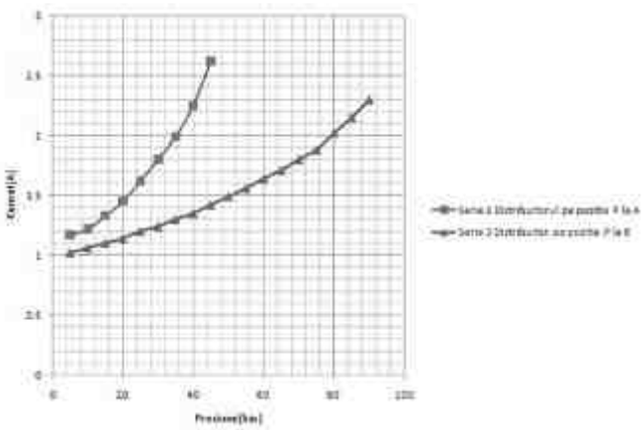

Fig.10- Grafic de variaţie a curentului absorbit de motorul electric, funcţie de variaţia presiunii din sistem.

Puterea mecanicã generatã de motorul hidraulic- P_{mh} (W), în care: P_{mh}- puterea mecanicã (W); V_m- capacitatea motorului.

$$P_{mh} = \frac{V_m \cdot n \cdot p \cdot \eta_m}{612} \qquad (27)$$

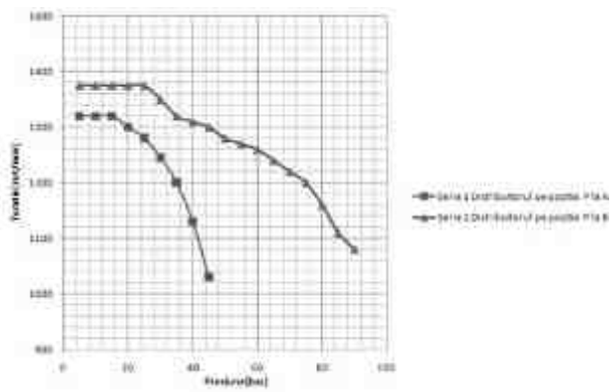

Fig.11- Grafic de variaţie a turaţiei motorului electric, funcţie de variaţia presiunii din sistem.

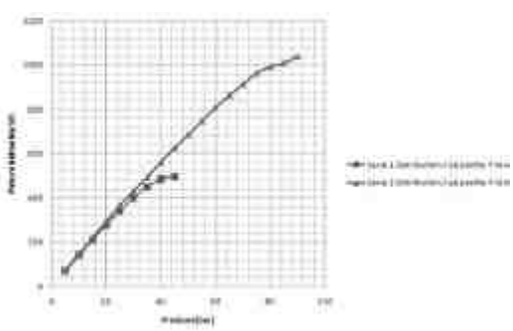

Fig.12- Grafic de variaţie a puterii hidraulice generatã de pompa volumicã, funcţie de variaţia presiunii din sistem.

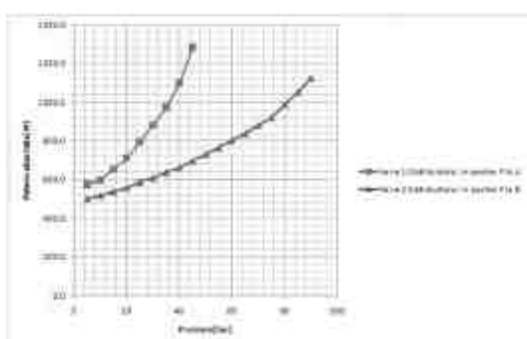

Fig.13- Grafic de variaţie a puterii electrice absorbite de motorul electric funcţie de variaţia presiunii din sistem.

6. Extinderea principiului recuperării de energie la standurile de anduranţă a cilindrilor hidraulici

În fig.14 se prezintã schema de principiu pentru un stand, care funcţioneazã cu recuperare de energie şi se poate utiliza pentru anduranţa motoarelor hidraulice liniare. Celor douã maşini volumice reglabile, pompã (poz.2) şi motorul (poz.3), li se reglează capacităţile astfel încât capacitatea pompei sã fie cu 10 % mai mare decât capacitatea motorului.

Aceste maşini volumice sunt antrenate simultan de motorul electric poz.1. Antrenerea simultanã se poate realiza fie folosind un motor electric cu douã capete de arbore, fie folosind un motor electric cu un capat de arbore şi o transmisie cu roţi dinţate cu raport de transmisie 1:1. În schemã tija cilindrului de probare (poz.6) se cuplează (poz.8) la tija cilindrului hidraulic 7, iar cãmăşile fiecãruia din cei doi cilindri hidraulici sunt prins într-un cadru rigid închis.

Supapa de presiune (poz.4.1), reprezintã supapa de siguranţã pentru pompa reglabilã, iar supapa de presiune (poz.4.2), reprezintã elementul de reglare a sarcinii pentru cilindrul de sarcinã.

Supapele de sens (poziţiile 9.1, 9.2, 9.3 şi 9.4) permit, alternativ, admisia şi evacuarea uleiului în şi din camerele de volum variabil ale

cilindrului de sarcinã, iar supapa de sens (poz.9.5) permite alimentarea motorului hidraulic, atunci când pompa evacuează la rezervor.

Eficiența energeticã a sistemului se produce pe douã cãi:

-la comutarea distribuitorului hidraulic 4/3 (poz.5), prin supapa 4.2 trece numai diferența de debit dintre debitul furnizat de pompã și cel admis de motorul hidraulic;

-motorul hidraulic produce un moment mecanic, care se adunã cu cel produs de motorul electric, ceea ce face ca acesta din urmã sã absoarbã mai puțin curent din rețea în timpul probei de anduranță a cilindrului de probare.

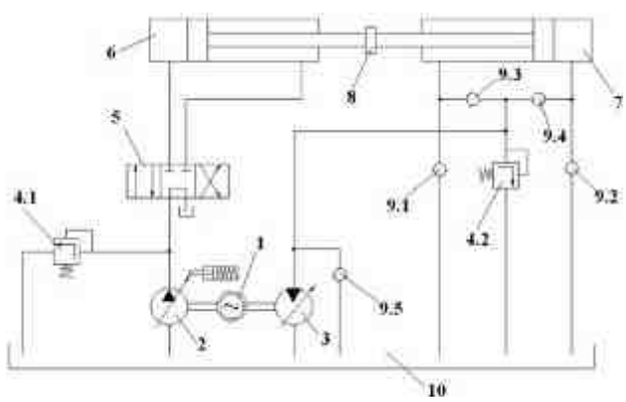

Fig.14- Schemã de principiu stand de anduranță, cu recuperare de energie, pentru motoare hidraulice liniare.

BIBLIOGRAFIE

[1] Nicolae Vasiliu, Daniela Vasiliu, *Acționări hidraulice şi pneumatice, vol.I,* Editura: TEHNICÃ, 2005, ISBN: 973-31-2248-3, pg.287-292;

[2] *AMESim* Software Suit;

[3] TEODOR COSTINEL POPESCU, IOAN LEPADATU, DRAGOS DANIEL ION GUTA, *Experimental research activies regarding the reduction of energy compsuntion at endurance test stands of rotary voliumetric machines,* INTERNATIONAL SCIENTIFIC TECHNICAL CONFERENCE *HYDRAULICS AND PNEUMATICS 2009*, Wroclaw, 7-9 October, ISBN 978-83-87982-34-8, pg. 303-310.

Semnificația notațiilor din fig.14 este urmãtoarea: 1-motor elelctric cu turație constantã; 2- pompã volumicã reglabilã; 3-motor volumic reglabil;4.1, 4.2: supape de reglare presiune; 5-distribuitor hidraulic 4/3; 6-cilindru hidraulic de probã; 7-cilindru hidraulic de sarcinã; 8-cuplaj; 9.1, 9.2, 9.3, 9.4, 9.5-supape de sens; 10-rezervor.

7. Concluzii

Cercetãrile teoretice și experimentale asupra modelului demonstrativ de stand pentru anduranța maș inilor volumice rotative, care funcționeazã pe principiul recirculãrii puterii hidrodinamice, au pus în evidențã importante economii de energie, în urmãtoarele condiții:

a) în general, sistemele de acționare hidraulice, folosite ca standuri de anduranță a maș inilor volumice rotative, dacã se realizeazã pe principiul cuplarii la axul aceluiași motor electric a douã maș ini volumice, o pompã și un motor, cu capacitatea pompei mai mare cu cca. 10 % față de capacitatea motorului, pot conduce la economisiri de energie electricã de cca. 30...35 %;

b) cuplarea celor douã maș ini volumice la același motor electric se face utilizând un motor electric cu douã axe sau un motor electric cu un ax și o transmisie cu roți dințate cu raport 1:1;

c) dacã un motor electric este dimensionat astfel încât sã realizeze simultan probele de anduranță pentru cele douã maș ini volumice rotative de la punctul a), la presiunea de încercare "p", în varianta motor hidraulic "decuplat" față de motorul electric, atunci același motor electric poate realiza probele de anduranță la o presiune de încercare de minim "2p", în varianta motor hidraulic "cuplat" la motorul electric;

d) întârzierea "ajutorului" dat de motorul hidraulic motorului electric este de aprox. 0,1s de la pornirea motorului electric;

e) aplicația se poate extinde și la standurile de anduranță a maș inilor volumice liniare.

MAIN FEATURES OF THE CENTRALISED AND DECENTRALISED WASTEWATER TREATMENT

PRINCIPALELE TRASATURI ALE TRATARII CENTRALIZATE SI DESCENTRALIZATE A APELOR UZATE

Britta S. BOETTCHER*

*Development and Assessment Institute in Waste Water Technology at RWTH Aachen University (PIA e.V.), Germany

1. Introduction

The quality of flowing waters in Germany has improved greatly in the past years. A reason for this is the increase of the degree of connection of the population to the sewer system and to wastewater treatment plants. In all of Germany, the degree of connection of the population was 96% in 2004, whereas it was 90% in 1991 and 79.5% in 1983 [1, 2]. This development shows how the water pollution control concepts of the federal and state governments since the 80ies combined with the according public interest achieved the high municipal sewage disposal standard [3].

Wastewater is the discharge water changed in its quality by domestic, industrial, agricultural or other use during dry weather (wastewater) such as the collected surface water from built or paved areas (surface water) [4, 5].

2. Centralised Wastewater Treatment

2.1. The Sewer System

The wastewater is mainly transported from its source to a wastewater treatment plant with an underground sewage system. The majority of the sewer network is constructed as a gravity pipeline, i. e. the wastewaters flow into the sewage systems vented by street or domestic outlets by gravity. The water level in the pipelines varies in dependence of the volume of water discharge. Parts of the pipelines are constructed as pressure mains and are filled completely with wastewater without ventilation. To overcome the rising, wastewater is pumped upwards. For the same discharge amounts, pressure mains need smaller cross sections than gravity pipelines, which results in lower investment costs for the sewage system.

However, the operation costs are higher for the pump stations of the pressure mains than for the transportation of water by gravity [6].

Sewers are made mainly of concrete or reinforced steel concrete. Vitrified clay pipes are used for aggressive wastewaters. Further possible realisations are pipelines made of brickwork, fibre cement pipes, steel pipes and plastic pipes, which are increasingly employed in the sewage system domain [7].

Municipal sewage systems can encompass one or more networks. The joint collection and discharge of wastewater and surface water is called a combined sewer system. In separate systems, both waters are gathered and discharge separately. For financial reasons, combined sewer overflows are built instead of having extremely large sewer cross sections. These relieve the system of maximum hydraulic loads either through intermediate storage and subsequent treatment of the collected wastewater or through partial treatment and an overflow structure into receiving water. [6]

2.2. Wastewater Quantity

On average, the amount of wastewater for Central and Western Europe is approximated to be 100 250 litres per person and day [8]. Additionally, further inlet sources into the sewer system such as the industrial and trade wastewater, surface water, agricultural wastewater, dump seepage water and extraneous water have to be considered. Extraneous water sources into the sewage systems occur, for example, through leaks in the system and thereby immersing ground water, illegally via faulty connections and through other diffuse sources.

The source areas and quantity of wastewater has been comprised for a sewage treatment plant of the Ruhrverband (Germany, North Rhine-Westphalia) in 1986:

Source	Wastewater Quantity in liter per person per day [l/(p*d
Domestic wastewater	150
Trade and industrial wastewater	50
Polluted wastewater	240
Agricultural wastewater (incl. liquid manure, silo seepage)	1
Leachate from land fills	1
Extraneous water (incl. water losses)	98
Sum	**540**

Table 1: Source areas of treated wastewater in Ruhrverband sewage treatment plants (average values from 1986) [9]

2.3. Wastewater Components

The wastewater components are categorised into the element groups depletion materials, nutrients, micropollutants and impurities.

Elevated oxygen consumption by the components of the waters is dangerous for the natural self-purification process. These depletion materials can exist in an inorganic and in an organic form. Inorganic, spontaneously oxygen depleting materials are usually of trade or industrial origin. Ammonium is an exception. It is created by the bacterial decomposition of urea and proteins. The organic materials are on the other hand contained in a large variety within domestic wastewater in the form of hydrocarbons, carbohydrates, alcohols, aldehydes, organic acids, fats, oils, waxes, peptides and proteins.

The nutrients are necessary for the production of cell matter. The supply of a number of important elements is necessary for this, e.g. carbon, oxygen, hydrogen, nitrogen, phosphor, sulphur, potassium, magnesium, sodium, calcium, chlorine and elements of enzymes and coenzymes.

Micropollutants in the sense of wastewater treatment are the substances and compounds which impair the activity of the microbial activated sludge biocenosis and hence also affect the cleaning capacity, for example absorbable organic halogen compounds (AOX) or heavy metals.

Impurities are substances which hinder the cleaning process of a sewage treatment plant. Especially high amounts of vegetable and animal fats such as oils in course dispersion impair the function of different aggregates. They can clog machinery and ventilation systems and cause worse microbial degradability due to their low solubility, hydrophobic character and reduced bio-availability of the wastewater. [10]

2.4. Wastewater Treatment

There are mechanical, biological and chemical processes for wastewater treatment. In large sewage treatment plants, the process steps are connected consecutively, so as to reduce the carbon, sulphur and nitrogen compounds, pathogenic germs such as organic and inorganic pollutants in municipal wastewater to a minimum. Hereby, the eutrophication and the contamination of the waters with germs and pollutants are avoided. [11]

Below, the different process steps for the treatment of municipal wastewater are listed:

Process Stage	Eliminated Substances	Process(es)	Used Equipment
Mechanical treatment	Coarse and fine particles	Filtration, sedimentation, flotation	Screen, sieves, sedimentation tanks, flotation tanks
Conventional biological treatment	Organic compounds (C-elimination)	Biological degradation	Aeration tanks, trickling filter, oxidation ditch, rotating biological contactors
Advanced treatment	Nitrogen	Nitrification / Denitrification (biological)	Mixed aeration tanks, fixed film reactors
	Phosphor	Biologically changing anaerobic / aerobic	Mixed aeration tanks
	Phosphor, heavy metals	Chemical / physical	Flocculation and sedimentation tanks, filters
Special processes	Pathogenic germs and parasites	Disinfection	UV-radiator
	Finest suspended solids	Microfiltration	Microfilters
	Dissolved, organic, remaining compounds	Adsorption	Activated carbon adsorber

Table 2: Process steps for the treatment of municipal wastewater [6]

Representation of the minimum standard of wastewater treatment steps in a typical municipal wastewater treatment plant with activated sludge processes:
During the first mechanical treatment step, coarse particles are held back with a screen and sieve such as smaller particles with a grit chamber. After sedimentation of the undissolved, mainly organic substances in the primary settlement tank, the aerobic, biological wastewater treatment occurs. Biomass is suspended in the aeration tank. Large-surface activated sludge floccules are formed, which are made up of bacteria, organic and inorganic material. Oxygen is brought into the tank over an aerator. The metabolism activities of the bacteria in the aerobic environment allow the extraction of the organic carbon, nitrogen and phosphor dissolved in the water. Nitrogen compounds are nitrified. The wastewater with the now chemically bound oxygen is fed into the anoxic part of the aeration tank. Because the concentration of dissolved oxygen is very low there, the nitrate is decomposed into elementary nitrogen (denitrification). Precipitants and flocculants are added to the wastewater if the phosphor concentration needs to be reduced further chemically than possible with a purely biological process. During the final sedimentation, the sludge floccules settle at the bottom of the tank. The clean water discharge over the edge of the tank is fed to the receiving water, mostly into running water. [11]
Besides the activated sludge treatment, biological contactors, trickling filters and membrane processes can be used for the biological treatment of wastewater.

2.5. Sewage Sludge Treatment

The primary sludge settled in the grit chamber and the primary settlement tank is next treated with secondary sludge from the final sedimentation tank. Ca. 1 2% of the treated wastewater is accumulated as sludge. On average, two thirds of the solid content of sewage sludge consists of organic material. The raw sludge consists of a reactive mixture, also containing organic and inorganic pollutants and germs.
A recycling of the sludge's nutrients as a fertiliser for the agriculture is only possible with extensive ecotoxicological analyses of the sewage sludge. Pollutants would otherwise enrich themselves in the earth and/or in agricultural plants and thereby reach the humans' nourishment.
Sludge treatment processes are used to reduce the organic fraction, to transform and mineralise pollutants at least partially and to eliminate or deactivate pathogenic germs. Besides the so-called sewage sludge stabilisation, there are disinfection and further chemical/physical/thermal treatments. The following intentions are to be achieved, fully or partially, depending on utilisation, dumping or combustion of the sewage sludge: volume reduction, biological stability, water content reduction, smell reduction, fuel value increase and inertisation. [6, 11]

3. Decentralised Wastewater Treatment

If wastewater accumulates in areas with low population densities, where a connection to the centralised sewer system is not possible, decentralised wastewater disposal possibilities in form of on site wastewater treatment are a good alternative. The decentralised wastewater treatment as small wastewater treatment plants is a substantial component of the sewage disposal in Europe and its importance will increase in the future. Small wastewater treatment plants are domestic or property sewage treatment plants with a purely domestic wastewater accumulation of maximal 8 m^3/d, which correspond to a capacity of up to 50 population equivalents. The beneficiary of the premises is responsible for the wastewater disposal and all the according rules for a small wastewater treatment plant.
On the market, small wastewater treatment plants exist in different models. In principle, the same treatment methods are applied to small sewage treatment plants as for large plants. First, the wastewater is mechanically pre-treated, too. Solids are held back in single or multicompartment septic sedimentation tanks and in multicompartment digestion tanks.

The flow velocity of the wastewater is hereby reduced so far, that the solids have enough time to sink to the bottom of the tank. In the digestion tanks, there are also anaerobic (bound oxygen is not present in dissolved or undissolved form) conversion.
For a stable operation of the biological stage, especially of the biological film system, a good solid retention is of great importance. A correct and timely disposal of faecal sludge can avoid a solid discharge to a large extent. The mechanical preliminary treatment is followed by the biological treatment step. The organic compounds contained in the wastewater undergo a decomposition process, which occurs mainly through microorganisms in combination with dissolved oxygen for aerobic processes and then without oxygen for anaerobic processes, just as in large sewage treatment plants. Thereby, inorganic compounds and biomass are produced by conversion processes. The last treatment step is the final clarification. The cleaned wastewater is separated from the carried activated sludge floccules by sedimentation and subsequently fed into running water or led in ground water by seepage.
Small wastewater treatment plants exist in many models and designs. They can constructed as single tank systems with an integrated pre-treatment or also as a two or multi-tank system with external pre-treatment. [12, 13].
In the following, the most conventional biological treatment steps are described [12, 13]:

3.1. Activated Sludge Treatment

For the activated sludge treatment, the wastewater is mixed with activated sludge and aerated. The aeration occurs through technical aggregates. Subsequently, the purified water is separated from the sludge sterically or chronologically. [13]

3.1.1. Aeration Plant

For the activated sludge treatment in the aeration tank, the biological wastewater treatment through microorganisms takes place.
A time-controlled aeration interval creates aerobic and anaerobic phases, so that the decomposition of organic pollutant in the wastewater is possible (see 2.4). Activated sludge floccules are formed, which are separated from the wastewater through sedimentation in the final clarification tank. The purified wastewater flows off above. The settled sludge is fed back into the aeration tank as return activated sludge or abstracted from the system as excess sludge. Excess sludge is created by the reproduction of microorganisms during biological degradation processes. If more activated sludge than necessary is present, the sludge is fed from the final to the primary treatment tank, stored there and then disposed of with the faecal sludge removal. [13]

3.1.2. Sequencing Batch Reactor (SBR) Plant

SBR plants are a special form of aeration plants. The oxygen of this activated sludge process is fed through technical aeration device, which creates a mixing as well as an aeration.
As opposed to pure aeration plants, the separation of the sludge-water-mixture does not occur in a separate clarification tank. The following treatment steps run after each other in the same reactor:

1) Charge of the reactor tank
2) Turnover and aeration
3) Sedimentation of the sludge
4) Clear water drainage
5) Excess sludge drainage

During the final treatment phase, there is no aeration or mixing. The purified wastewater is pumped off above. Excess sludge is also pumped into the pretreatment and disposed of with the faecal sludge removal. A sludge recirculation is not necessary.
During the individual treatment steps 2 to 5, the reactor of the SBR plant is not allowed to receive wastewater. The incidental wastewater can be stored in the pre-treatment tank or in a separate tank. [13]

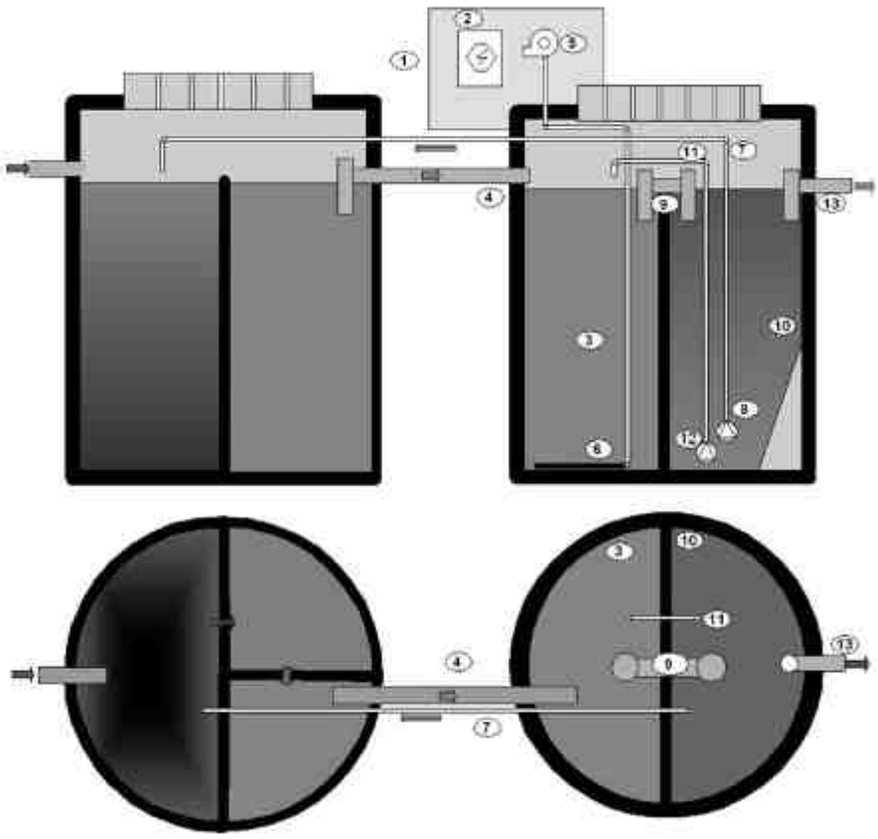

Fig. 1 Sketch of the functional components of an aeration system [14]

1	Switchboard
2	Control unit
3	Aeration tank / chamber
4	Inlet from pre-treatment tank
5	Blower installation
6	Aerator
7	Excess sludge pipe
8	1. submersible motor- or mammoth pump in clarifier
9	Discharge aeration tank
10	Final sedimentation tank / chamber
11	Return sludge pipe
12	2. submersible motor- or mammoth pump in clarifier
13	Discharge final sedimentation tank

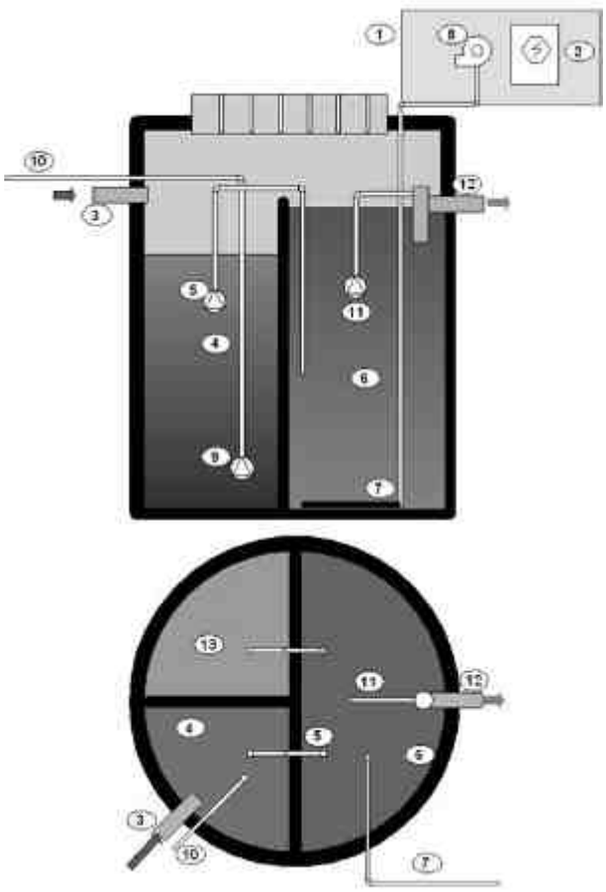

Fig. 2 Sketch of the functional components of a SBR plant [14]

1	Switchboard
2	Control unit / supply voltage
3	Inlet
4	Pre-treatment tank
5	Submersible motor- or mammoth pump for the charge
6	Combined aeration and clarification tank
7	Aerator
8	Blower installation
9	Submersible motor- or mammoth pump for the excess sludge
10	Excess sludge pipe
11	Pump for the clear water discharge
12	Discharge SBR plant
13	Pre-treatment

3.1.3. Activated sludge plant with membrane separation (MBR)

Membrane filtration is a special form of an aeration plant and is currently the most innovative technology on the market. Besides the technical aeration devices in the aeration tank for the wastewater treatment according to the activated sludge treatment, there are membranes integrated in the place of a clarification tank, which separate the purified wastewater from the sludge. The submerged membrane unit consists of filter modules with a pore size of only few thousandths of a millimetre, a pump for the production of a pressure difference for the filtration and a blower for the aeration, respectively for self-cleansing of the membranes. Due to the very small pore size of the membrane, an extensive disinfection of the purified wastewater takes place. The membrane filter is to be rinsed in regular intervals, so as to prevent the so-called fouling, i.e. clogging of the membrane. Regular excess sludge is fed into the pre-treatment tank, from where it can then be disposed of. [13]

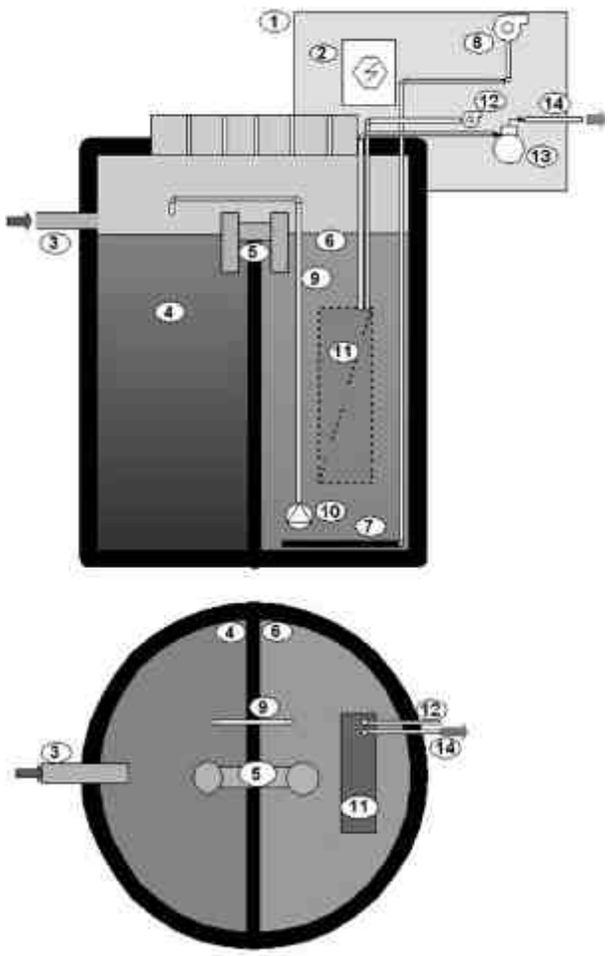

Fig. 3 Sketch of the functional components of a membrane aeration plant (MBR) [14]

1	Switchboard
2	Control unit
3	Inlet
4	Pre-treatment tank
5	Discharge pre-treatment tank
6	Aeration tank
7	Aerator
8	Blower installation
9	Excess sludge discharge
10	Submersible motor- or mammoth pump in aeration tank
11	Membrane filter
12	Flushing device
13	Permeate drain
14	Discharge

3.2. Fixed Film Process

In the fixed film process, a biological wastewater treatment with microorganisms takes place, which grow on a carrier material and thereby form a biological film. The carrier material can be employed submerged or "dry". [13]

3.2.1. Fixed Film Reactor

In fixed film reactors, the carrier material usually consists of plastic bodies fixed in the tank, so that they are immersed in the wastewater at all times. For the degradation of organic pollution in the wastewater, the attached bacteria require oxygen. This oxygen is fed by a diffused air aeration, which is placed beneath the fixed bed. This way, the oxygen supply and the mixing are ensured. Additionally, the up-streaming air causes the dead microorganisms to break away from the carrier material and to be carried into the final sedimentation tank. The separation of the activated sludge/wastewater mixture takes place due to the settling of the sludge by gravity. The purified wastewater flows off above. The settled sludge is fed into the primary sedimentation tank, where it is stored and disposed of with the faecal sludge removal. [13]

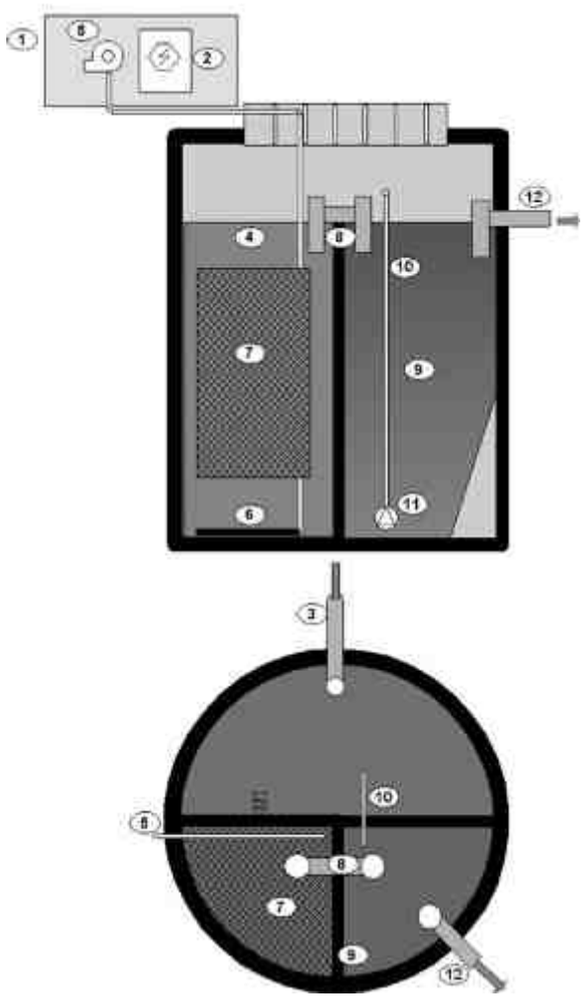

Fig. 4 Sketch of the functional components of a fixed film reactor [14]

1	Switchboard
2	Control unit
3	Inlet from primary sedimentation tank
4	Aeration tank
5	Blower installation
6	Aerator
7	Submerged fixed bed
8	Discharge aeration tank
9	Final sedimentation tank/chamber
10	Excess sludge discharge
11	Submersible motor- or mammoth pump for the excess sludge discharge
12	Discharge final sedimentation tank

3.2.2. Fluidised Bed Reactor

This small sewage treatment plant only differs from the fixed film reactor in the form of the carrier material. Whilst the carrier material for the biology is set in the fixed film reactor, it floats freely in the wastewater of the fluidised bed reactor's aeration tank. The microorganisms adhere to small, mobile plastic bodies which serve as the carrier material. The oxygen supply and mixture is ensured by a blower. [13]

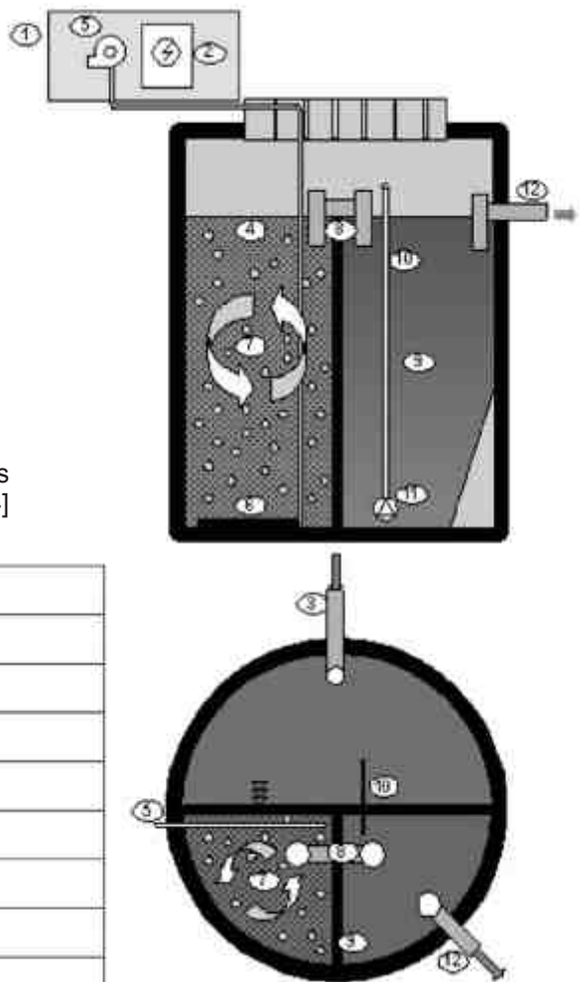

Fig. 5 Sketch of the functional components of a fluidised bed reactor [14]

1	Switchboard
2	Control unit
3	Inlet from primary sedimentation tank
4	Aeration tank
5	Blower installation
6	Aerator
7	Freely moving carrier material
8	Discharge aeration tank
9	Final sedimentation tank/chamber
10	Excess sludge discharge
11	Submersible motor- or mammoth pump for the excess sludge discharge
12	Discharge final sedimentation tank

3.2.3. Biological Filter Plant

A biological filter plants' biofilm carrier medium is made of lava slag, accordingly moulded plastic particles or fixed film. The trickling filter bottom is trickled vertically by the pre-cleansed wastewater, which is spread evenly over the filter's surface. For the degradation of organic pollution in the wastewater, the bacteria require oxygen. This oxygen is fed through an aerator (stack effect). With time, the thickness of the biofilm will increase and the bacteria at the bottom of the tank will die because of an insufficient oxygen and nutrient concentration.

The dead microorganisms are washed away by the wastewater passing through and fed to the final sedimentation tank as sludge. The activated sludge is separated from the wastewater by sedimentation. The purified wastewater flows off above. The settled sludge is fed into the primary sedimentation tank, stored there and disposed of with the faecal sludge removal. The clean water in the final sedimentation tank needs to be recirculated, i.e. added to the trickling filter repeatedly, because the desired cleaning effect will not be achieved by a single run-through. [13]

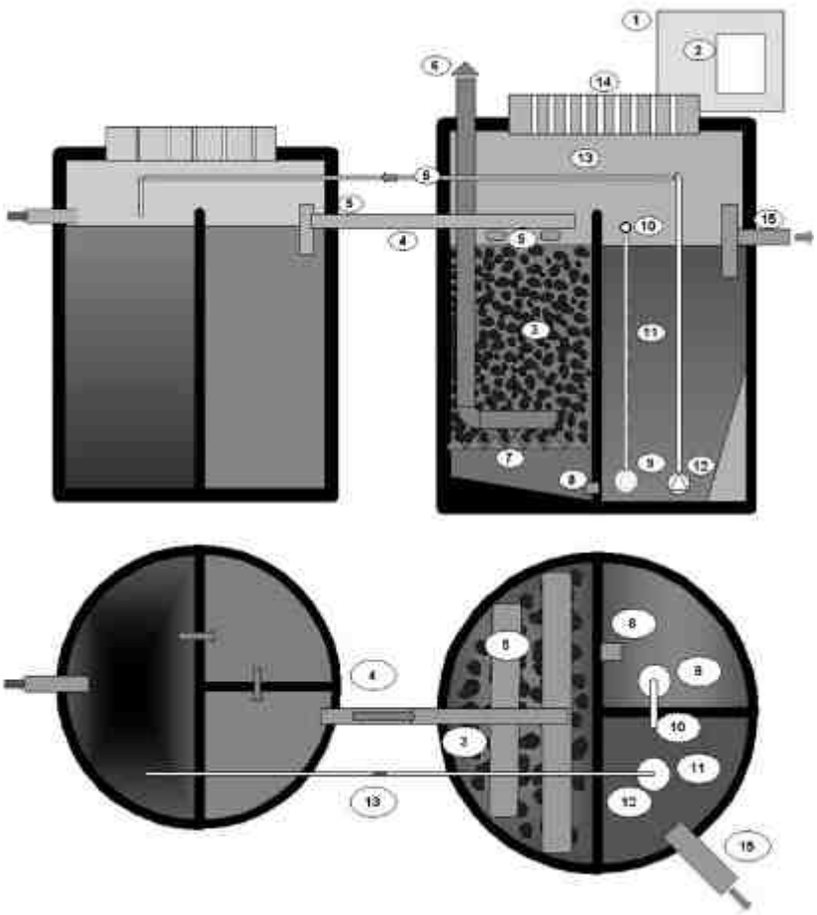

Fig. 6 Sketch of the functional components of a biological filter plant [14]

1	Switchboard
2	Control unit
3	Trickling filter
4	Inlet from primary sedimentation tank
5	Flow splitters
6	Aeration trickling filter
7	Separation device
8	Inlet for pumping pit
9	Submersible motor pump in pumping pit
10	Inlet final sedimentation tank
11	Final sedimentation tank/chamber
12	Submersible motor pump for excess sludge discharge and recirculation
13	Recirculation and excess sludge discharge
14	Air supply holes
15	Discharge final sedimentation tank

3.3 Rotating Biological Contactor

Rotating biological contactors are based on a combination of activated sludge processes and fixed film processes. Rotating biological contactors are roller-shaped plastic discs, which rotate around their horizontal axes. The centre of the axis is on the water level, so that the disc alternates between the wastewater and air.

Dead microorganisms are washed away by the horizontally flowing wastewater in the tank and fed into the final sedimentation tank. Therefore, a technical aeration installation is not necessary. The principle of the primary and the final treatment corresponds to the biological film process. [13]

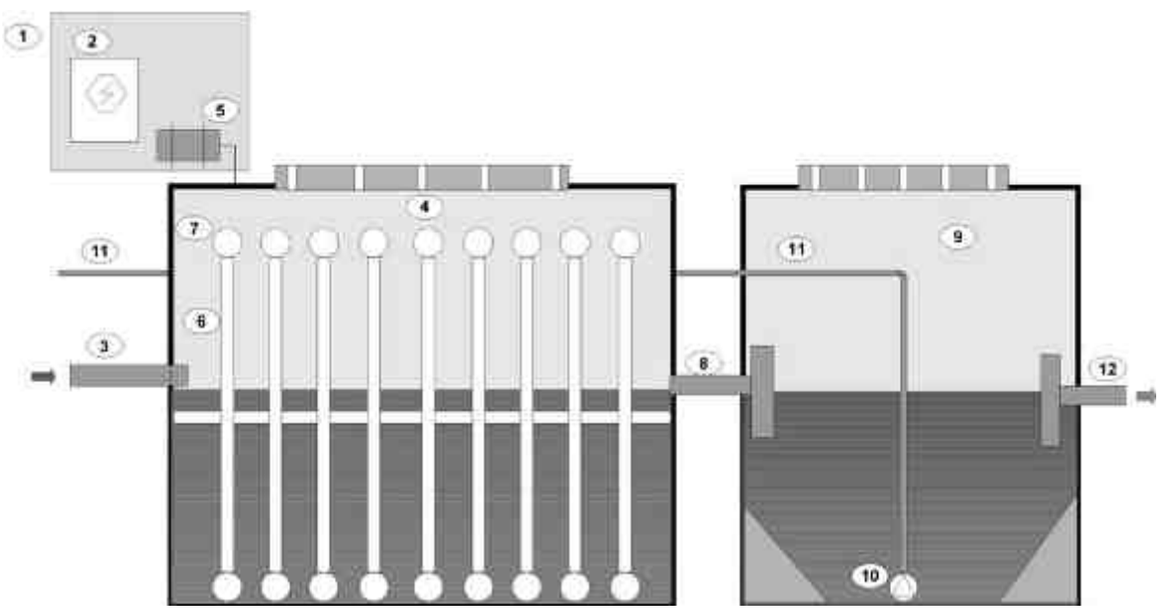

1	Switchboard
2	Control unit
3	Inlet from primary treatment
4	Aeration tank
5	Engine for the rollers of the rotating discs
6	Rotating discs
7	Water scoop
8	Discharge into the final treatment tank
9	Final treatment tank/chamber
10	Submerged motor for excess sludge discharge and recirculation
11	Recirculation and excess sludge discharge
12	Discharge final sedimentation tank

Fig. 7 Sketch of the functional components of a rotating biological contactor [14]

3.4 Constructed Wetlands

Constructed wetlands are soil filters with growing plants. The soil is made of sandy gritty materials, which shall ensure sufficient water permeability, and is separated from the natural surroundings. The biological wastewater treatment results from the microorganisms living in the soil, which form a biological film there. Depending on the construction type, the pre-treated wastewater flows through the filter horizontally or vertically.

The necessary aeration depends on the type of wastewater feed and the plants. The plant cover of the soil is made of marsh plants, such as different kinds of reed beds. The roots of the plants cause a loosening of the ground and an oxygen supply. The cleaned wastewater is caught in drain pipes and fed into the sampling shaft (control shaft), before it is led in the discharge system or the ground water. [13]

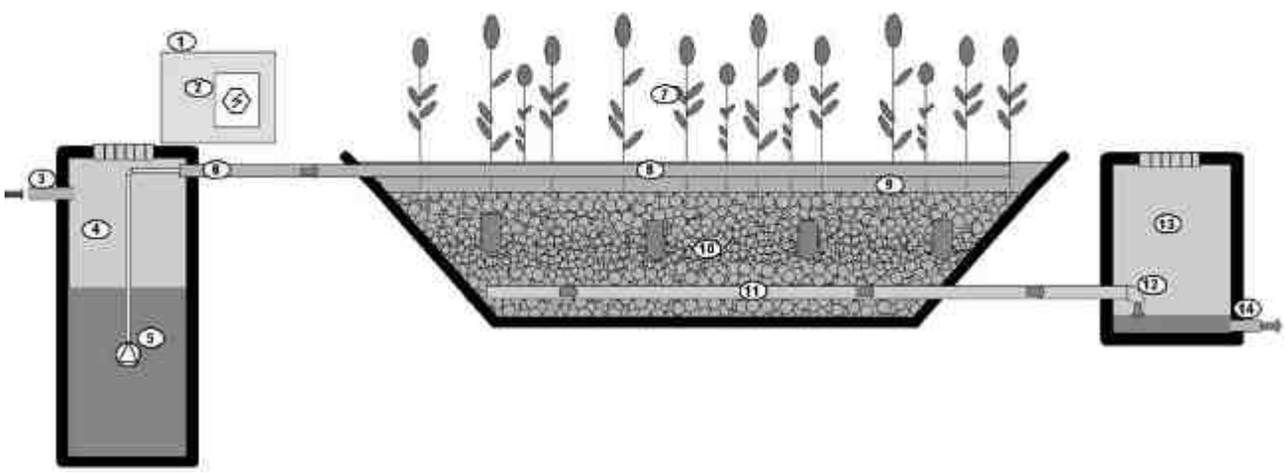

1	Switchboard
2	Control unit
3	Inlet from primary treatment tank
4	Feed und settlement tank
5	Submerged motor pump in feed tank
6	Inlet plant bed
7	Plants
8	Feed system
9	Cover bed
10	Filter shaft
11	Drain system
12	Discharge from drain system
13	Discharge / control shaft
14	Discharge from control shaft

Fig. 8 Sketch of the functional components of a constructed wetland [14]

3.5 Pond Systems

The biological wastewater treatment in pond systems is done by microorganisms, which are attached to the pond walls and floor as well as floating freely in the pond. For the degradation of organic pollution in wastewater, bacteria require oxygen. One differentiates between aerated and non-aerated ponds. In the case of non-aerated pond systems, the oxygen is absorbed over the water surface. In the case of aerated pond systems, the oxygen is fed through technical aeration constructions. In the range of domestic wastewater treatment, non-aerated pond systems are applied prominently. The pond systems must be closed off to the natural soil. The wastewater flows through the pond and is gathered at the other end in a drain system. Afterwards, the cleaned wastewater is carried into the surface and ground water via a control shaft. The enclosing with a fence is necessary for pond systems. Furthermore, there should be no broadleaf trees in the close surroundings, because foliage can burden the pond. [13]

4. Conclusion

It can be established that centralised and decentralised solutions for the technical wastewater treatment are equal in cleaning efficiency. In remote areas, a cost-intensive sewer network connection to a far away municipal sewage treatment plant is probably not purposeful. In this case, decentralised wastewater concepts can be good solutions, also for the retention of water and nutrients. However, decentralised systems are more susceptible to greater fluctuations of wastewater amount and composition.

Therefore, the decision between a centralised or decentralised wastewater treatment solution can not be made on principle. During the planning for a region, the specific conditions are to be inspected exactly, especially taking into account a sustainable water economy.

Bibliography:

[1] European Waste Water Catalogue

[2] Statistisches Bundesamt, Fachserie 19 Umwelt, R. 2.1 Öffentliche Wasserversorgung und Abwasserbeseitigung (1991, 2004)

[3] ATV-Information, Zahlen zur Abwasser- und Abfallwirtschaft, 1996

[4] Deutsches Gesetz über Abgaben für das Einleiten von Abwasser in Gewässer (Abwasserabgabengesetz AbwAG)

[5] Deutsches Institut für Normung, DIN-Blatt 4045: Abwassertechnik Grundbegriffe

[6] G. Kayser: Gewässerschutz, Skript zur Vorlesung im Studiengang „Ökologie und Umweltschutz“, Fachhochschule Zittau/Görlitz, October 2006

[7] W. Hosang, W. Bischof: Abwassertechnik, B.G. Teubner Stuttgart, Leipzig, 1998

[8] different authors on behalf of the DWA and the university of Weimar, Siedlungswasserwirtschaft im ländlichen Raum - Teil Abwasserentsorgung, Universitätsverlag Weimar, April 2007

[9] P. Koppe, A. Stozek: Kommunales Abwasser, Vulkan-Verlag Essen, 1999

[10] B. S. Delewski, diploma thesis: Abwasserbehandlung in der Binnenschifffahrt, Fachhochschule Aachen, September 2002

[11] L. Tennhardt, dissertation: Potenzial technischer Abwasser- und Klärschlammbehandlungsverfahren zur Elimination endokrin aktiver Substanzen, TU Dresden, 2004

[12] D. Verschitz, diploma thesis: Untersuchungen zur Anwendbarkeit von Prüfverfahren nach EN 12566 für Kleinkläranlagen, Fachhochschule Aachen, 2007

[13] http://www.abwasser-dezentral.de/, October 2009

[14] L. Sonntag, Prüf- und Entwicklungsinstitut für Abwassertechnik an der RWTH Aachen (PIA) e.V., 2007

RESULTS ON CRUDE VEGETABLE OIL COMBUSTION IN LOW AND MEDIUM SIZE BOILERS FOR ENERGY GENERATION

Ing. Radulescu Alexandru, dr. Ing. Garjoaba Mihu, ing. Toma Alexandra, ing. Bogatu George
S.C. OVM ICCPET S.A. Oskar von Miller - Institut de Concepție Cercetare Proiectare Echipamente Termoenergetice
Calea Rahovei 266-268, cod 050912, Bucureºti sector 5 - România
Tel: +40 21 405.77.50, Fax +40 21 405.77.77 - www.ovm-iccpet.ro

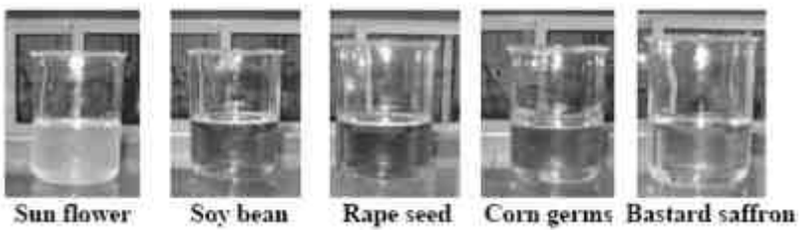

1. INTRODUCTION

Vegetable oils can be used in heating, cogeneration and transport applications, substituting conventional fuels. They are promoted by UE Directives as renewable fuels. Crude vegetable oils production and processing have low costs and low energy consumption. The good energy balance combined with a good CO_2 balance recommends crude vegetable oils as economical-ecological biofuels for energy generation. This is a way to develop a renewable energy source in order to ensure the energy supply security and to reduce greenhouse gas emissions. In addition, especially with decentralized production and distribution, this way could have a positive impact on economics and employment for rural communities.

The paper focuses upon the possibility to burn crude vegetable oils for stationary applications, both industrial and domestic. The electric and heat generation using crude vegetable oil as fuels enlarges the application field of these instead of transport utilization until now. The experimental researches have been done on 2 MW boiler..

The main target of the research is to determine the quality and performances of these oils combustion in steam and hot water generator with a large scale of output.

The minimum modification of the conventional liquid burners is a condition for a good economical efficiency

The feasibility of the vegetable oils utilization is based on the Romanian agricultural potential that could sustain an industrial biofuels production.

The first investigations and experiments concerning to some indigenous crude vegetable oils properties have demonstrated the possibility of the utilization for heating systems and electricity generation. From our country's cultures the most significant sources with respect to the agricultural potential are sun-flower, corn germs, rape and soy. In addition bastard saffron oil was been proposed by an agricultural society to be tested.

The evolution of the agriculture lands with oleaginous plants in Romania is given in figure 1. The current crops are about (1 1.6) t/ha (fig. 2), but the climate of our country and soil quality are favorable to obtain high crops, e.g. for rape of about (2.5 3.5) t/ha (Romanian annual statistic reports).

In comparison with the traditional liquid fuel, vegetable oils are characterized by slightly higher viscosity, high ignition point, very low sulphur content, and a comparable heat value. These typical properties impose complex research in order to obtain economically-ecologically performance of the future burning technologies, without major modifications of the energy producing installations.

Five types of crude vegetable oils with a possible stationary energetic utilization were tested to determine their characteristics: rape seed, soy bean, sun flower, corn germs and bastard saffron oils. The characteristics of rape seed and sun flower oils are shown in table 1, in comparison with lower fuel oil.

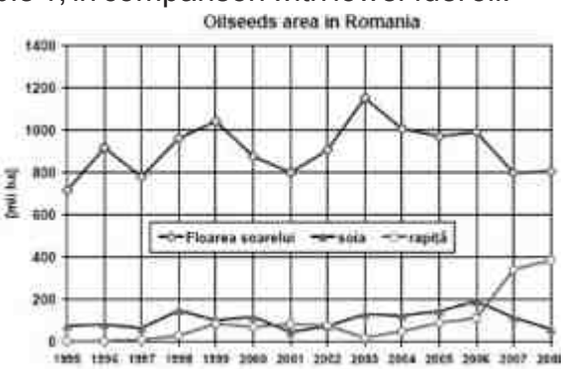

Fig. 1.

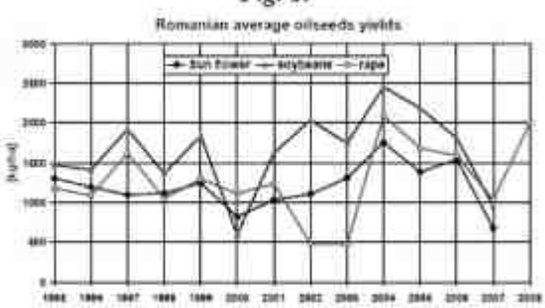

Fig. 2.

Table 1. Characteristics of some vegetable oils and fuels usually employed in electricity and heat generation

Fuel Property	Unit	Crude vegetable		Lower fuel oil
		Rape seed	Sun flower	
Density at 15 °C	Kg/dm³	0.9185	0.918	0.90
Relative viscosity at 50 °C	°E	2.68	2.81	1.4 (20 °C)
Low calorific power	MJ/kg	40.24	39.37	40,6
	MJ/l	36.96	36.15	36,5
Ignition point	°C	267	313	50
Sulfur content	% wt	0.077	0.088	0.5
Conradson Carbon residue	% wt	0.279	0.294	1.0

The results show that in comparison with lower fuel oil the two kinds of vegetable oil do not differ too much in terms of density and lower calorific power. Vegetable oils are characterized by a higher **Ignition Point that** could make more difficult the ignition but it is favorable for transportation and handling that begin safer (figure 3).

For most vegetable oils **the viscosity** is slightly higher than lower fuel oil. In order to have a good atomization and efficient burning the heating is one of the measures that enable burners to run on vegetable oil.

Taking into consideration this aspects preliminary atomization and ignition tests were made. The ignition of the oil droplet blasted in a natural gas flame was first studied and then the combustion of an atomized jet in a boiler furnace. The experiment has demonstrated a stable ignition for all kinds of vegetable oils for a atomizing pressure of (1 1.5) MPa. For these ignition and combustion tests the vegetable oil was not preheated. Due to their higher viscosity, the rotary cup atomization method was adopted.

A remarkable property of vegetable oil is the **low sulfur content, which reduces drastically the** SOx emission and the necessity of catalyst.

Others properties refer to the content of water, phosphorous and ash, carbon residue, contamination, oxidation. A high contamination can block filters and atomization systems that impose filtering measures. A water-vegetable oil emulsion, despite a difficult stability, can be favorable for burning.

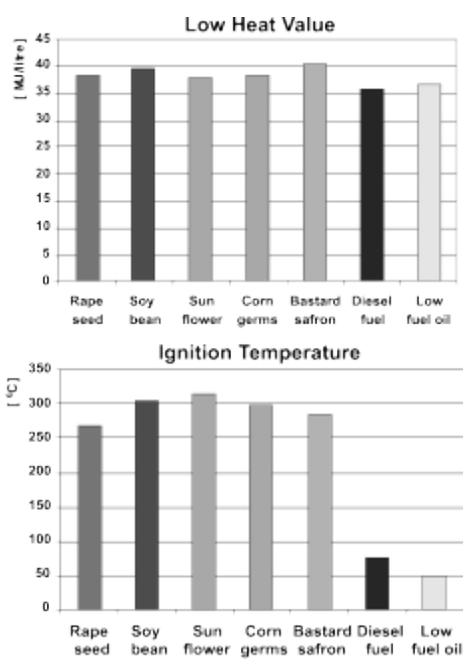

Fig. 3. Characteristics of some vegetable oils and liquid fossil fuels

Based on the vegetable oil characteristics and preliminary tests on ignition and combustion a new stage of the research was completed, the combustion of a mechanical atomizing jet, by aid of a pump, in a 55 kW boiler furnace.

2. ATOMIZATION CHARACTERISTICS

In case of simple mechanical injectors without swirl chamber, the fineness of grinding is influenced by nozzle design and its functioning conditions (atomizing pressure). Thus, it is necessary to consider the following:
-liquid flow rate (by increasing the outlet velocity or injector inlet pressure the droplet dimension decreases). Further more, the droplets become more homogeneous;
-the increase of nozzle outlet diameter leads to larger droplets;
In order to ensure a suitable atomization, for simple mechanical injectors, the ratio $\frac{L}{d_0}$ between the channel length and nozzle diameter is recommended in range of (4 ÷ 6).
For analytical calculus of maximum particle dimension resulted from atomization, the following expression may be used:

$$d_{max} = k\frac{\sigma}{\rho_0 w^2} \qquad (1)$$

In the atomized liquid jet there are droplets with diameters varying from 0 to dmax, meaning that the atomization process is poly-dispersed. The medium droplet diameter dmax is insufficient to characterize their dispersion within the jet, because for the same medium diameter there are possible several droplet distributions.
Thus it is necessary to take into consideration the distribution characteristic by droplet dimensions, in order to appreciate the atomization uniformity.

Based on double logarithmic network Rosin-Ramler-Benner, grinding analysis method can be used to study the distribution uniformity considering the droplets dimensions:

$$R = 100 \cdot e^{-\left(\frac{d}{d'}\right)^m} \text{ or } R = 100 \cdot e^{-\left(\frac{d}{d_m}\right)^m} \qquad (2)$$

where R is droplets mass percent, out of the total number of droplets for which the diameter is larger or equal than an established diameter d. The medium droplets diameter, d_m, corresponds for $\frac{d}{d_m} = 1$ and $R = 36.6\%$. For burners with mechanical atomization under pressure, dispersion parameters m have values from 2 to 4.

Calculus pointed out the value for the distribution coefficient $m = 2.98$. Corresponding to this value, the following particle diameters emerged: $d_{max} = 124\ \mu m$ and $d_m = 72\ \mu m$.

The same ratio between the two diameters as for light volatile liquid fuels is highlighted $\frac{d_{max}}{d_m} = \sqrt[m]{5.924}$.

In conclusion, the calculus proved a good atomization when using mechanical pump injectors. This conclusion is sustained by experimental investigation.

3. BURNING TEST RESULTS on BOILER of 2 MW

These researches were hosted by the pilot boiler of 2 MW, presented in figure 4. The boiler generates hot water burning solid, liquid and gaseous fuel.

Fig. 4. Experimental boiler of 2 MW from ETCN Laboratory

In order to perform the vegetal oils combustion, the boiler was equipped with a rotary cup burner specially designed, with a maximal flow-rate of 90 kg/h. To ensure the startup phase,

a natural gas nozzle system of 3 m^3_N/h natural gas has been adopted. The speed of the cup was about 6000 rpm, in the normal range for such burner. In figure 5 are presented the rotary cup burner and another burner (with mechanical atomization).

a.

b.

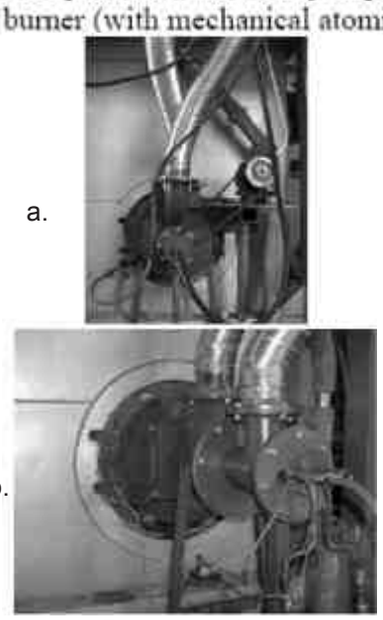

a.Rotary cup burner
b.Mechanical atomizing burner
Fig. 5.

During tests, the vegetal oil (sunflower and rape) flow-rate was in range of 6085 kg/h, corresponding to a thermal power of 6501000 kW.

In figure 6 are shown in parallel a flame of natural gas and a flame of rape seed oil and natural gas, obtained in the same furnace.

a.

b.

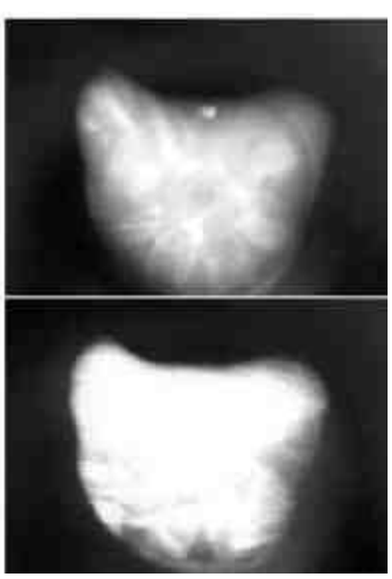

a.Natural gas flame
b.Natural gas + rape seed oil flame
Fig. 6.

The good design of rotary cup burner allowed a cold startup of the boiler without supplementary conventional fuel (natural gas), with a good performance of atomization, even without fuel preheating (the temperature of cold oil was 20 C). For the oil preheated at 50 C, the maximal droplet diameter was 120 m, and the average on was 70m. (d_{max}=120 m º i d_{med}=70 m).

In table 2 are shown the experimental test results.

Table 2. Combustion results for crude sun flower oil and low fuel oil

	Sun flower crude oil			LFO
Thermal regime [kW]	650	850	900	1000
Fuel rate [kg/h]	60	78	86	92
Stag temp. [^{0}C]	160	165	170	180
Water rate [kg/h]	1120	1460	1500	1630
Water Δt [^{0}C]	50	50	50	50
O_2 [%]	8.5	8.5	8.4	8.3
CO_2 [%]	-	11.2	11.3	11.35
CO [mg/m^3]	240	245	250	250
NOx [mg/m^3]	140	145	145	150
SO_2 [mg/m^3]	6	6	6	7
Air λ	1.7	1.68	1.65	1.64
Depr. [hPa]	0.20			0.20
q_A [%]	9.8	9.6	9.6	9.4
Boiler efficiency [%]	86	86	87	87

The experimental researches were completed and validated by means of numerical modeling an simulation techniques. In figure 7 is visualized the field of NO emission in the pilot furnace burner. The maximum is situated on the main flow-stream line of the furnace. The vegetal oil combustion in rotary cup burners was a success that recommends the solution to the future users.

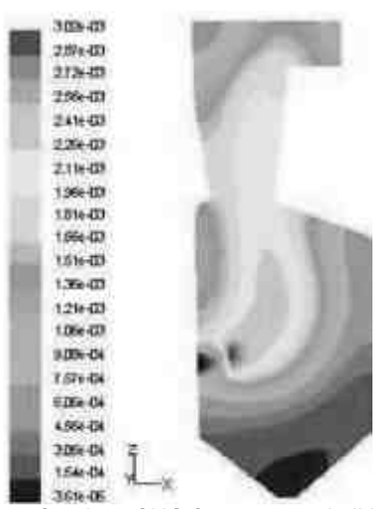

Fig. 7. Mass fraction of NO for rape seed oil burning

. CONCLUSIONS

In order to asses the economical efficiency of the project, both the agricultural potential regarding oil plant crops and the vegetal oil industry have been analyzed.

The local use of vegetal oil as fuel by the oil producers leads to an energy cost lower than those obtained by fossil fuel combustion.

Thus, next costs are announced (VAT included):

- ? Vegetal oil, delivery price for oil factory: 1.05 Euro/kg
- ? Vegetal oil obtained by cold pressing by the producer: 0.74 Euro/kg;
- ? Diesel fuel: 1.16 Euro/kg (at fuel pump);
- ? Light liquid fuel: 1.1 Euro/kg .

Taking into account of the low heat ratio between vegetable oil and diesel fuel of 0.96, the following equivalent prices of the vegetal oil have been computed:

- ? Vegetal oil, delivery price for oil factory: 1.09 Euro/kg ;
- ? Vegetal oil obtained by cold pressing by

For an oil factory, the average oil for energy use could be about 10000 t/year, meaning a 2400000 Euro/year savings in comparison with diesel fuel use and 1800000 Euro/year with light liquid fuel combustion.

For a consumer with a annual consumption of 10000 tones, buying the oil directly from the factory, the saving is 70000 Euro/year versus diesel fuel and 52500 Euro/year in comparison with light liquid fuel.

For a residential user with a annual oil consumption of 2000 kg, the saving can reach the value of 1080 Euro.

Thus, the use of vegetal oils in energy purposes can develop especially by extending suitable crops, the land reserve of the Country allowing a production of 2.5 millions tones of oil plant seeds.

SECTORUL DE ÎMBUNĂTĂȚIRI FUNCIARE DIN JUDEȚUL VÂLCEA

LAND RECLAMATION SECTOR IN VALCEA COUNTY

Dr. Ing. Maria PASCU*
Ing. Ion COSTACHE**

** Director Strategii ANIF Bucuresti, centrala@anif.ro*
*** Sucursala teritoriala Dunare-Olt, Unitatea de administrare Valcea*

SECTORUL DE ÎMBUNĂTĂȚIRI FUNCIARE DIN JUDEȚUL VÂLCEA

Amenajările de îmbunătățiri funciare cuprind următoarele categorii de lucrări:

- **îndiguiri şi regularizări** ale cursurilor de apă de interes local prin care se asigură, în principal protecția terenurilor și a oricăror categorii de construcții împotriva inundațiilor, surse locale de apă și emisari pentru scurgerea apelor;
- **amenajări de irigații** și orezării prin care se asigură aprovizionarea controlată a solului și a plantelor cu cantitățile de apă necesare dezvoltării culturilor și creșterii producției agricole. Aceste amenajări cuprind lucrări de captare, pompare, transport, distribuție și evacuare aa apei și după caz, lucrări de nivelare a terenului;
- **amenajările de desecare şi drenaj,** care au drept scop prevenirea și înlăturarea excesului de umiditate de la suprafața terenului și din sol, în vederea asigurării condițiilor favorabile de utilizare a terenurilor. Aceste amenajări cuprind lucrări de colectare, de transport și de evacuare în emisar a apei în exces;
- **lucrări de combaterea eroziunii solului şi de ameliorare a terenurilor afectate de alunecări ,** prin care se previn, se diminuează sau se opresc procesele de degradare a terenurilor. Aceste amenajări cuprind lucrări pentru protecția solului, regularizarea scurgerii apei pe versanți, stingerea formațiunilor torențiale, stabilizarea nisipurilor mișcătoare;
- **amenajările pedoameliorative pe terenurile saraturate,** acide și pe nisipuri, pe terenurile poluate, inclusiv cu reziduuri petroliere cu haldele de la exploatările miniere, pe alte terenuri neproductive, cuprinzând și lucrările de nivelare modelare, de scarificare, de afanare adâncă, rigole și șanțuri de scurgere a apei, araturile în benzi cu coame, udările de spălare a sărurilor, aplicarea de amendamente, precum și îngrășăminte, în scopul valorificării pentru agricultură și după caz pentru silvicultură.
- **perdelele forestiere de protecție** a terenurilor agricole și plantații pentru combaterea eroziunii solului;
- **alte soluții tehnice şi lucrări noi,** rezultate din activitatea de ceercetare.

Realizarea amenajărilor de îmbunătățiri funciare la nivel național are loc pe baza programelor și strategiei sectoriale, iar la nivel local, conform nevoilor autorităților publice locale, ale persoanelor juridice sau fizice interesate, pe baza programelor zonale și locale de amenajare a teritoriului.

Proiectarea, executarea și exploatarea amenajărilor de îmbunătățiri funciare se fac în corelare cu lucrările de gospodărire a apelor, hidrotehnice, silvice, de gestionare a căilor de comunicație, în acord cu interesele proprietarilor de terenuri cu documentațiile de urbanism și de amenaajare a teritoriului, ținând seama de cerințele de protecție a mediului.

Administrația Națională a Îmbunătățirilor Funciare își desfășoară activitatea la nivel de amenajare de îmbunătățiri funciare, prin sucursalele sale și Unitățile de Administrare Județene.

Unitatea de Administrare Vâlcea face parte din cadrul Sucursalei Teritoriale Dunăre-Olt cu sediul la Craiova.
Din punct de vedere morfologic județul Vâlcea se situează pe linia Subcarpaților Getici, pe dealuri puternic fragmentate de numeroase văi adânci cu caracter torențial.
Relieful se caracterizează printr-o energie mare, exprimată prin diferența de nivel de peste 450 m (de la 750 m la 300 m).
Formele de relief care se întâlnesc frecvent sunt culmile înguste și versanți puternic înclinați, neuniformi ca urmare a proceselor fizico geologice de pantă care au generat corniș e de desprindere, valuri și alte forme specifice alunecărilor de teren.
Versanții cultivați au pante de 15-35 %, dar sunt și suprafețe cu pante de 30-70 % ocupate îndeosebi de arborete, sau pajiști naturale semistabilizate. În afara acestora, apar numeroase izvoare și zone cu exces de umiditate.
Județul Vâlcea și județele limitrofe Gorj, Dolj, Argeș, Olt, ocupă primele locuri în țară în ceea ce privește gravitatea fenomenelor de degradare accelerată a terenurilor agricole prin eroziune, alunecări de teren și inundații. Județul Vâlcea, se situiază pe primul loc.
Din punct de vedere al eroziunii de **suprafață, județul Vâlcea se clasifică pe locul 5 pe țară**, cu o valoare medie de 12 t/ha/an iar **din punct de vedere al eroziunii în adâncime pe locul 4** cu o valoare medie de 8,5 t/ha/ an. **Din punct de vedere al alunecărilor de teren, județul Vâlcea ocupă locul I,** cu o valoare medie de 4,8 t/ha/an.
Suprafața totală de teren afectată de aceste fenomene active este de 38720 ha, din care:
-eroziune de suprafață 13200 ha;
-alunecări de teren 3700 ha;
- eroziune de adâncime 21820 ha.
Acestea, în prezent, nu au lucrări de stopare a lor.
Județul Vâlcea, dispune de o suprafață agricolă de 242.457 ha, din care 90.870 ha sunt amenajate prin lucrări de îmbunătățiri funciare (irigații, desecări, combaterea eroziunii solului- CES).
Suprafețele ocupate de principalele categorii de lucrări sunt următoarele:

- irigații suprafața amenajată 10937 ha;
- desecare-drenaje suprafață amenajată 13031 ha;
- combaterea eroziunii solului suprafață amenajată 65102 ha.

Inventarul fizic al lucrărilor de îmbunătățiri funciare, la nivelul județului Vâlcea, structurat pe tipuri de lucrări se prezintă astfel:

Irigații
15 stații de pompare se regăsesc în 6 amenajări situate în localitățile: Budești, N. Bălcescu, Galicea Olanu, Drăgoiești, Mihăești, Băbeni, Marcea, Ionești, Prundeni, Drăgășani, Voicești, ștefănești;

Desecare
Amenajările de desecare se regăsesc în 6 amenajări gravitaționale în localitățile: Mihăești, Băbeni, Ionești, Prundeni, Voicești, ștefănești, Galicea, Olanu, Drăgoiești, Lalosu, Făurești, Diculești și o stație de evacuarea apei prin pompare în localitatea Galicea.

Combaterea eroziunii solului
Lucrările se regăsesc în 42 de amenajări, de pe suprafața județului, din peste 70 de localități.

Din punct de vedere administrativ Unitatea de Administrare Vâlcea este structurată pe 10 zone compuse din amenajări hidroameliorative.
Prezentăm cele 10 zone administrative cu principalele amenajări din componență, după cum urmează:

Zona 01. Rm Vâlcea Ocnele Mari cu amenajările;
- Amenajarea complexă irigații desecări Mihăești- Băbeni cu suprafața de 1616 ha.
- Amenajarea de CES Acumulare Rm. Vâlcea cu suprafața de 1730 ha;

Zona 02. Păuşeşti Maglaşi- Olăneşti cu amenajarea CES BH Olănești cu suprafața de 3998 ha;
Zona 03. Govora-Mihăeşti cu amenajările:
- CES BH Govora 4158 ha:
- Completări CES Mihăești Băbeni 729 ha;
- **Zona 04. Costeşti Băbeni** cu amenajarea CES BH Bistrița cu suprafața de 7072 ha.

Zona 05. Horezu Sirineasa cu amenajarea CES BH Luncavăț cu suprafața de 7076 ha;
Zona 06. Oltețul Superior cu amenajarea CES BH Olteț Sub. Horezu cu suprafața de 2334 ha;
Zona 07. Oltețul Mijlociu Zătreni- Bălceşti cu amenajarea CES BH Oltețul Mijlociu cu suprafața de 11419 ha;
Zona 08. Cerna Firtățeşti Lalosu Făureşti cu amenajările:
- Desecare Făureș ti Lalosu- 1924 ha;
- CES BH Cerna cu o suprafață de 3720 ha;

Zona 09. Bucşani Cioroiu cu amenajările:
- Amenajare Complexă Bucș ani-Cioroiu 7326 ha;
- CES Bucș ani Cioroiu cu suprafața de 4075 ha;

Zona 10 Călimăneşti - Drăgoieşti cu amenajările:
- Amenajarea Complexă Olanu-Drăgoieș ti- 1494 ha;
- Amenajarea Complexă Galicea 736 ha;
- Amenajare irigații Budeș ti 484 ha;
- Amenajare irigații N. Bălcescu-410 ha;
- Amenajare desecare Trepteanca Cungrea Mare 455 ha;
- CES BH Topologul Inferior 3493 ha.
- Amenajare CES Aninoasa Bercioiu 1354 ha.

Amenajările de irigații au fost reabilitate parțial între anii 2001-2004 suprafața repusă în funcțiune fiind de 7500 ha și 9 stații de pompare, în localitățile Budeș ti, Olanu, Galicea, Marcea, Ioneș ti, Prunddeni, Drăgăș ani, Voiceș ti, N. Bălcescu.
Conform Legii 138/2004 amenajările de irigații nu mai sunt de utilitate publică trecând în domeniul privat al statului, urmând a fi predate comunităților locale prin înființarea de Organizații ale Utilizatorilor de Apă pentru Irigații (OUAI).
Acțiunea de înființare a OUAI-urilor pe teritoriul județului Vâlcea în localitățile cu amenajări de irigații este în desfășurare. La această dată s-a finalizat înființarea a șase OUAI:

- OUAI CĂLINA;
- OUAI LUNCA OLTULUI DRĂGOIEșTI;
- OUAI LUNCA SÂMNICULUI;
- OUAI LUNCA OLTUL OLANU;
- OUAI PICĂTURA GALICEA;
- OUAI VALEA OLTULUI ORLEșTI PRUNDE.

Amenajările de desecare şi combaterea eroziunii solului sunt de utilitate publică, rămânând în administrarea statului, pentru care se alocă fonduri cu scopul de întreținere și repararea lor.
În anii 2006-2008, s-au realizat lucrări de întreținere și reparații în amenajările de desecare și CES după cum urmează:
I. În anul 2006 unitatea a avut la activitatea de întreținere și reparații un plan de 1.000000 lei, structurat pe amenajări și tipuri de lucrări.
II. În anul 2007 unitatea a avut la activitatea de întreținere și reparații un plan de 751.158 lei, structurat pe amenajări și tipuri de lucrări.
III. În anul 2008 unitatea a avut la activitatea de întreținere și reparații un plan de 1741448 lei, structurat pe amenajări și tipuri de lucrări.
Pentru anul 2009 au fost planificate lucrări de reparații în următoarele amenajări hidroameliorative:
Desecare Olanu Drăgoieș ti, în comunele Olanu și Drăgoieș ti;
CES BH Oltețul Mijlociu, în comunele Tetoiu și Zătreni;
CES BH Luncăvăț în comunele Sirineasa și Oteș ani;
CES Topologul Inferior în comuna N. Bălcescu;
CES BH Cerna în comunele Stăneș ti, Măciuca, Valea Mare, Lădeș ti și Roieș ti.
Valoarea lucrărilor de reparații planificate a se executa în anul 2009 se ridică la 900.000 lei, iar ca sursă de finanțare repartizată pentru acest an avem numai 90.000 (aproximativ 5% din realizatul anului 2008).
Menționăm că există o planificaare a lucrărilor de reparații pe amenajări şi localități până în anul 2010 inclusiv, lucrări care au fost deja licitate şi pentru care există surse foarte mici de finanțare.

<u>Investiții</u>
În anul 2008 s-a finalizat lucrarea finanțată din fonduri SAPARD la obiectivul de investiții **„Măsuri de prevenire şi combaterea alunecărilor de teren" în localitatea**

Păuşeşti Maglaşi cu o valoare de 4476759 lei º i cu următoarele capacităţi fizice: 270 ha cu lucr[ri de CES, cu 5.3 km amenajări ravene active.

Tot în anul 2008 au început lucrările de investiţii în localitatea Berislăveº ti la obiectivul **„Lucrări de prevenire şi combaterea alunecărilor de teren în zona Berislăveşti, judeţul Vâlcea”** pe o suprafaţă de 284 ha º i cu o valoare de 1259174 lei, care au fost finalizate la data de 30.09. 2009.

Obiectivul **„Consolidarea terenurilor alunecate în zona Mosoroasa”** Olăneº ti cu o valoare de 6500000 lei º i o suprafaţă amenajată de 385 ha care avea un termen de finalizare 31.01. 2009 nici nu a început datoritã neînţelegerilor apărute între constructor º i proiectant nu a început. Lucrările la obiectivul de investiţii din zona Mosoroasa se vor relua în urma aplicării legislaţiei referitoare la achiziţiile publice în luna noiembrie 2009.

În privinţa terenurilor agricole degradate în urma fenomenelor de alunecări de teren, speciali º tii din cadrul Unităţii de Administrare Vâlcea au identificat º i monitorizat suprafeţele afectate de pe raza judeţului, în anii 2006-2009, fiind elaborate studii de prefezabilitate privind „**Măsuri de prevenire şi combatere a alunecărilor de teren**” în localităţile: Stoeneº ti º i Buneº ti 73 ha, Mãldăreº ti 541 ha, Alunu 2005 ha, Roº iile º i Tetoiu 207 ha, Pietrari º i Tomº ani 80 ha.

Studiile sus amintite au fost depuse la Centrala ANIF, urmând a fi promovate în funcţie de resursele financiare acordate judeţului Vâlcea. Douã din aceste studii (zona Buneº ti Stoieneº ti º i Alunu) au fost deja avizate în Consiliul Tehnico-Economic al ANIF în luna iunie 2008, iar în anul 2009 a mai fost promovat „Completãri lucrări de CES BH Olteţul Mijlociu, Zona Roº iile º i Tetoiu, Judeţul Vâlcea.”

La această datã Unitatea de Administrare Vâlcea are în lucru elaborarea a douã Note de fundamentare privind stoparea º i combaterea fenomenelor de alunecări a terenurilor agricole, în localităţile:

- Muiereasca, în satele Andreeº ti, Gãvăneº ti, pe o suprafaţă de 25 ha;
- Runcu pe o suprafaţă de 110 ha.

De asemenea se lucrează la o Notã de fundamentare privind reabilitarea º i modernizarea lucrărilor din BH Govora, perimetrele Cacova, Dobriceni.

Având în vedere cele prezentate mai sus, vă informăm că strategia ANIF RA pentru ducerea la îndeplinire a misiunii de administrare, exploatare, întreţinere º i reparare a amenajărilor de îmbunătăţiri funciare s-a elaborat º i se actualizează continuu, ţinând seama de importanţa fiecărui obiect de activitate, de necesităţile º i evenimentele produse de factorii distructivi, de tipul calamităţilor naturale, care au o dinamică aleatorie funcţie de schimbările climatice º i a factorilor de mediu.

DEPOLUAREA DE NITRIȚI CU AJUTORUL OZONULUI, A APELOR FOLOSITE LA IRIGAȚII

NITRATE DE-POLLUTION BY OZONE, OF WATER USED IN IRRIGATION

Ing. Prof. Constantin-Nicolae DRAGANESCU*, Ing. Diana PRUNARU*

*S.C. Electroputere Craiova

Abstract : *The present paper shows that the equipment for irrigations is a component part of the land improvement and its efficiency depends on solving the report between soil- water- plant- climate. Taking the exemple of the flow is a water main irrigation canal, the necessary quantity of ozone is calculated for the depolluation of sodium nitrites. At the end of the paper an equipment generating ozone is briefly presented, equipment proposed by the authors and protected by OSIM Bucureşti (State Office For Inventions And Trademarks)- Romania.*

1. Irigațile şi raportul sol- apă- plantă-climă

Lucrările agricole de amenajare a irigațiilor aparțin domeniului de interes național, deoarece sunt parte importantă a lucrăriilor de îmbunătățiri funciare. Atunci când amenajările de irigații deservesc suprafețe mari de culturi agricole, ele constituie amenajări în sisteme de irigații. Eficiența irigațiilor însă, se justifică și depinde de modul în care prin acestea, sunt dirijate optim relațiile din sistemul sol-apă-plantă-climă. Adică de înțelegerea proceselor privind pătrunderea,înmagazinarea, mișcarea și pierderea apei din sol, a consumului de acumulare și spălare a **sărurilor** din sol. Referindu-ne la acest ultim aspect, concluzionăm că este necesar ca apale folosite la irigații, nu trebuie să aducă în solul irigat,constituenți chimici dăunători, respectiv poluanți. Printre acestia, se numără și **nitriții**, care sunt săruri ale acidului azotos și chimic rezultați prin pierderea unui atom de oxigen, de către azotați.

În sol, **nitriții** ajung fie prin apele freatice (de la zotații folosiți în exces ca îngrășăminte agricole, sau din apele menajere ale populației sau a celor provenite de la fermele zootehnice sau avicole) fie din apele folosite pentru irigații.

2. Nocivitatea nitriților pentru ființa umană

NITRAȚII (ex: NH4NO3; KNO31; NaNo3.) care ajung în sol așa cum am arătat mai sus, sunt levigați și duși în apa izvoarelor și ași ajung în organismul uman unde sunt transformați în **NITRIȚI**, de către flora bacteriană intestinală.

Nocivitatea acestor nitriți constă în aceea că acești ia se combină chimic cu radicalii liberi rezultați în procesele biologice ce se desfășoară în celulele și țesuturile umane. Radicalii liberi sunt « resturi « ale chimismului arderilor din corpul uman- sub formă de atomi sau grupuri de atomi care au un element de valență liber și prin covalență se combină și cu nitriți sau cu alte substanțe din chimismul organismului uman. Astfel de combinații ale radicalilor liberi aglomerează celulele și țesuturile umane, determinând dereglarea respirației intracelulare, dereglând procesele vitale de hrănire a celulei, etc.

Caracteristica fundamentală a acestor combinații ale radicalilor liberi, este aceea că au o viață lungă și foarte lungă, iar legăturile lor chimice sunt foarte greu de distrus de procesele imune sau autoimune existente în celula umană. De acea, chimismul combinațiilor radicalilor liberi umani, determină boli foarte grave (leucemie, cancer).

Concluzie: nitriți din ape, trebuiesc distruși, înainte de a ajunge în corpul uman.

3. Ozonul ca depoluant.

Ozonul(O3) este forma alotropică de existența a oxigenului, în natură. Se cunosc cel puțin 18 reacții chimice, în urma cărora rezultă ozonul: Reacția generală care descrie obținerea ozonului direct din axigen, este următoarea: 3O2 ? 2O3, iar reversibilitatea reacției arată acea propietate caracteristică a ozonului și anume că este foarte instabil.

Folosirea ozonului ca depoluant se datorează capacităţii sale de puternic oxidant. Este folosit nu numai pentru depoluarea apelor uzate menajere sau industriale ci şi pentru potabilizarea apelor consumate de marile aglomerări umane. **Avantaje**: agent oxidant ecologic, putere mare de oxidare(timp de reacţie foarte scurt) ; nu necesită operaţii de depozitare fiind produs la locul utilizării, nu produce compuşi secundari halogenaţi; nu are gust şi miros specific şi îmbogăţeşte totodată apa cu oxigen.
Pe cale industrială se produce folosind oxigenul din aerul atmosferic, trecându-l printre doi electrozi alfaţi la o diferenţă de potenţial de 15 - 20Kv.

4.Exemplu de calculul a cantităţii de ozon necesar depoluării nitriţilor de Natriu, măsuraţi în apele unui canal magistral de irigaţii.

Autorii unui tratat de irigaţii(1) menţionează că dimensiunile uzuale ale unui canal magistral de irigaţii, are secţiunea unui trapez isoscel cu dimensiunile: baza mică (fundul canalului) =4 m; baza mare =8 m; înălţimea de la bază, la luciul de apă = 2,5m
Deci secţiunea ocupată de apă S=15m. Aceiaşi autori menţionează viteza de 1m/sec ca fiind o vitezã medie de curgere a apei în canalele magistrale de irigaţii.
Debitul de apă vehiculat prin secţiunea canalului este D=SxV= 15M3/sec
Presupunem că măsurătorile calităţii apei folosite la irigaţii şi vehiculate prin canalul de mai sus, au determinat a concentraţie de azotiţi de Natriu de 2mg/dm3. Necesarul deozon pentru depoluarea cantităţii de nitriţi măsuraţi se calculează astfel :
Conform reacţiei chimice: NaNO2+O3=NaNo3+O2, fiecare mg de azotiţi de Natiu consumă 0,695mg ozon. Deci dacă la 1mg azotit de Na se consumă 0695mg ozon, la 2mg azotit se consumă 1,39mg ozon. Calculând cantitatea de azotit de Na din cei 15000kg apă, rezultă 30000 mg azotit de Natriu. Cantitatea totală de ozon consumată este de 41,700kgO3 (consumată într-o secundă). Autorii lucrării (2) arată că pentru producerea unui gram de ozon consumul specific de energie, este 20Wh.

Revenim la calculul nostru rezultă ca pentru cantitatea de 41,700kg de ozon consumată într-o secundă, este necesară cantitatea de energie electrică de 1234kwh
Având în vedere că irigarea zi-noapte, durează cam 60 zile pentru un an agricol şi raportând la recolta obţinută în condiţii de irigare intensă, se consideră consumul de energie necesară depoluării de nitriţi ca acceptabilă din punct de vedere al costurilor lucrărilor agricole.
Dar sănătatea oamenilor care se hrănesc cu alimente fără azotiţi nu se poate exprima în kwh consumaţi pentru depoluare ci în ani de viaţă sănătoasă.

5.**Monitorizarea calităţii apelor**

În România, se monitorizează strict calitatea apelor conform HG188/2002 (reactualizată) care stabileşte norme legale pentru condiţiile de descărcare în mediul acvatic a apelor uzate. Dar şi in cazul irigaţiilor(ape descărcate în solurile agricole) se impune a se efectua măsurători asupra apei folosite în acest scop. Cum o parte din canalele magistrale din sistemul naţional de irigaţii (exemplu : sistemul Sadova-Bechet Rast ; Sadova-Dăbuleni-Corabia) sunt alimentate cu apă din Dunăre trebuie menţionat că efectiv se desfăşoară zilnic asemenea măsurători, pentru apele Dunării.
Pentru comentarii asupra numărului mare de indicatori de calitate măsuraţi se prezintă mai jos un **Buletin de Analiză** conţinând asemenea măsurători, fără a devoala rezultatele măsurătorilor. (Observaţii: Rezultatele cantitative ale masurătorilor trebuiesc cunoscute nunai de persoane autorizate legal).

Sectiunea de control
Dunarea-Oltenita km[redacted]
Tara - Romania

BULETIN DE ANALIZA PRIVIND CALITATEA APEI FLUVIULUI DUNAREA

Data recoltarii:
Conditii hidrometeorologice:
Debit Q= m3/s Vant:moderat
Nebulozitate: cer senin Aspect-culoare:gri cenusiu
Cod proba R294,R295,R296

Nr. crt.	INDICATORI DE CALITATE		UM	Mal stang	Mijloc	Mal drept	Media
	A.FIZICO - CHIMICI						
1	Temperatura aer	Ta	°C	[redacted]	[redacted]	[redacted]	[redacted]
2	apa	Tw	°C	[redacted]	[redacted]	[redacted]	[redacted]
3	Materii in suspensie	SSM	mg/l	[redacted]	[redacted]	[redacted]	[redacted]
4	pH			[redacted]	[redacted]	[redacted]	[redacted]
5	**Indicatorii regimului de oxigen**						
5.1.	Oxigen dizolvat	DO	mgO_2/l	[redacted]	[redacted]	[redacted]	[redacted]
			%	[redacted]	[redacted]	[redacted]	[redacted]
5.2.	Consum chimic de oxigen(KMnO4)	COD-Mn	mgO_2/l	[redacted]	[redacted]	[redacted]	[redacted]
5.3.	Consum chimic de oxigen(K2Cr2O7)	COD-Cr	mgO_2/l	[redacted]	[redacted]	[redacted]	[redacted]
5.4.	Consum biochimic de oxigen la 5 zile	BOD_5	mgO_2/l	[redacted]	[redacted]	[redacted]	[redacted]
6	**Indicatori de mineralizatie**						
6.1.	Conductivitate 20°C	Cond.	µS/cm	[redacted]	[redacted]	[redacted]	[redacted]
6.2.	Saruri totale	TDS	mg/l	[redacted]	[redacted]	[redacted]	[redacted]
6.3.	Alcalinitate	Alk	mmol/l	[redacted]	[redacted]	[redacted]	[redacted]
6.4.	Duritate	Hard	mev/l	[redacted]	[redacted]	[redacted]	[redacted]
6.5.	Cloruri	Cl^-	mg/l	[redacted]	[redacted]	[redacted]	[redacted]
6.6.	Sulfati	SO_4^{2-}	mg/l	[redacted]	[redacted]	[redacted]	[redacted]
6.7.	Bicarbonati	HCO_3^-	mg/l	[redacted]	[redacted]	[redacted]	[redacted]
6.8.	Calciu	Ca^{2+}	mg/l	[redacted]	[redacted]	[redacted]	[redacted]
6.9.	Magneziu	Mg^{2+}	mg/l	[redacted]	[redacted]	[redacted]	[redacted]
6.10.	Sodiu	Na^+	mg/l	[redacted]	[redacted]	[redacted]	[redacted]
6.11.	Potasiu	K^+	mg/l	[redacted]	[redacted]	[redacted]	[redacted]
7	**Elemente biogene**						
7.1.	Amoniu	$N\text{-}NH_4^+$	mg/l	[redacted]	[redacted]	[redacted]	[redacted]
7.2.	Nitriti	$N\text{-}NO_2^-$	mg/l	[redacted]	[redacted]	[redacted]	[redacted]
7.3.	Nitrati	$N\text{-}NO_3^-$	mg/l	[redacted]	[redacted]	[redacted]	[redacted]
7.4.	Ortofosfati	$P\text{-}PO_4^{3-}$	mg/l	[redacted]	[redacted]	[redacted]	[redacted]
7.5.	Fosfor total	P	mg/l	[redacted]	[redacted]	[redacted]	[redacted]
7.6.	Clorofila "a"		µg/l	-	-	-	

Sectiunea de control
Dunarea-Oltenita km
Tara -Romania

Nr. crt.	INDICATORI DE CALITATE		UM	Mal stang	Mijloc	Mal drept	Media
8	**Indicatori de poluare specifica**						
8.1.1.	Fenoli	Fen	mg/l	[redacted]	[redacted]	[redacted]	[redacted]
8.1.2.	Detergenti anioactivi	ANA	mg/l	[redacted]	[redacted]	[redacted]	[redacted]
8.1.3.	Substante petroliere	OIL	mg/l	[redacted]	[redacted]	[redacted]	[redacted]
8.1.4.	Compusi organo-	AOX(Cl)	µg/l	[redacted]	[redacted]	[redacted]	[redacted]
	clorurati absorbabili						
8.1.5.	Pesticide organoclorurate	lindan	µg/l	[redacted]	[redacted]	[redacted]	[redacted]
		p,p' DDT	µg/l	[redacted]	[redacted]	[redacted]	[redacted]
		aldrin	µg/l	[redacted]	[redacted]	[redacted]	[redacted]
		endrin	µg/l	[redacted]	[redacted]	[redacted]	[redacted]
8.2.1.	Fier	Fe	mg/l	[redacted]	[redacted]	[redacted]	[redacted]
8.2.2.	Mangan	Mn	mg/l	[redacted]	[redacted]	[redacted]	[redacted]
8.2.3.	Zinc	Zn	µg/l	[redacted]	[redacted]	[redacted]	[redacted]
8.2.4.	Cupru	Cu	µg/l	[redacted]	[redacted]	[redacted]	[redacted]
8.2.5.	Crom total	Cr	µg/l	[redacted]	[redacted]	[redacted]	[redacted]
8.2.6.	Plumb	Pb	µg/l	[redacted]	[redacted]	[redacted]	[redacted]
8.2.7.	Cadmiu	Cd	µg/l	[redacted]	[redacted]	[redacted]	[redacted]
8.2.8.	Mercur	Hg	µg/l	[redacted]	[redacted]	[redacted]	[redacted]
8.2.9.	Nichel	Ni	µg/l	[redacted]	[redacted]	[redacted]	[redacted]
8.2.10	Arsen	As	µg/l	[redacted]	[redacted]	[redacted]	[redacted]
	B.BIOLOGICI						
1	Saprobitate	grad de saprobitate		[redacted]	[redacted]	[redacted]	[redacted]
2		index saprob		[redacted]	[redacted]	[redacted]	[redacted]
	C.MICROBIOLOGICI						
1	Coliformi totali		Coli/100ml	[redacted]	[redacted]	[redacted]	[redacted]
2	Coliformi fecali		Coli/100ml	[redacted]	[redacted]	[redacted]	[redacted]
3	Streptococi fecali		Col /100ml	[redacted]	[redacted]	[redacted]	[redacted]
	D.RADIOACTIVITATE						
1	Beta total		Bq/l	[redacted]	[redacted]	[redacted]	[redacted]
2	Tritiu H_3		Bq/l	[redacted]	[redacted]	[redacted]	[redacted]
3	Cs 134		Bq/l	[redacted]	[redacted]	[redacted]	[redacted]
4	Cs 137		Bq/l	[redacted]	[redacted]	[redacted]	[redacted]

Observaţii :Metalele reprezinta formele dizolvate ale acestora.

Mãsurãtorile au fost efectuate de organele abilitate de la Direcţia Apelor Jiu-Olt ºi din observarea conţinutului numeroºilor indicatorilor de calitate mãsuraţi rezultã cã România monitorizeazã strict calitatea apei Fluviului Dunãrea, respectând normele UE din domeniul apelor.

6. O instalaţie de produs ozon propusă de autori, foloseºte o masinã electricã de inducţie cu bobinaje modificate, din gama de puteri standardizate.Spre deosebire de instalaţiile clasice de produs ozon care folosesc ca sursã de tensiune un transformator de înaltã tensiune, autorii considerã cã este mai puţin costisitoare întreţinerea instalaţiei care foloseºte maºina electricã de inducţie ºi este mai uºor de exploatat. Instalaţia propusă de autori este protejatã printr-o Cerere de Brevet la OSIM Bucureºti, iar autorii cautã colaboratori pentru construirea modelului instalaţiei ºi apoi a instalaţiei propriu-zise.

7. Concluzii

7.1. Depoluare cu ozon, de nitriþi existenþi în apele folosite la irigaþii (concomitent se distrug º i alþi poluanþi fizico-chimici º i biologici) este benefică pentru sănătatea populaþiei;

7.2. Deoarece s-au contruit instalaþii eficiente de produs ozon- acesta este folosit cu totală siguranþă sanitară la depoluarea apelor uzate sau pentru potabilizarea apelor ce alimentează marile aglomerări umane ;

7.3. Calculele cantităþilor necesare de ozon ca depoluant sunt simple º i sigure ;

7.4. Calitatea apelor din România este strict monitorizată conform normelor naþionale º i ale UE ;

7.5. Autorii propun o instalaþie industrială pentru produs ozon folosind o maºină electrica de inducþie º i caută coloaboratori pentru construirea modelului º i respectiv a instalaþiei propriu-zise.

8. Bibliografie

8.1. I. Pleºa º i colectiv
Exploatarea sistemelor de irigații- Ed.Ceres- Bucureşti- 1989

8.2. D.Robescu º i colectiv
Controlul automat al proceselor de epurare a apelor uzate- Ed Tehnică- Bucureşti-2008

WATER ANALYSIS AND QUALITY CONTROL IN ENVIRONMENT ANALYSIS LABORATORY, ICIA CLUJ-NAPOCA

Senila Marin, Abraham Bela, Levei Erika, Miclean Mirela, Tanaselia Claudiu, Roman Cecilia
INCDO INOE2000, Research Institute for Analytical Instrumentation, 67 Donath, 400293, Cluj-Napoca, Romania, Tel: +40-264-420590, Fax: +40-264-420667, icia@icia.ro

ABSTRACT

Due to human activities, global scale pollution of the environment has increased significantly in the last two centuries. With the increasing influence of anthropogenic factors on water sources, the water quality assessment has an important role. Laboratory for Environment Analysis (LAM) from Research Institute for Analytical Instrumentation is accredited according to the SR EN ISO/CEI 17025:2005, by Romanian Accreditation Association and has all the required resourced for quality analysis of environmental samples. Analytical techniques used in the Laboratory for Environment Analysis for water quality determination are: Gas Chromatography, Liquid Chromatography, Ion Chromatography, Flame or Furnace Atomic Absorption Spectrometry, Inductively Coupled Optical Emission Spectrometry, UV/VIS Spectrophotometry, pHmetry, Potentiometry, Conductometry, Titrimetry and Gravimetry.

At ICIA we recognize that our analyses are important part of our customers business and the results are used to make health and safety decisions with no adverse effect on human health and the environment.

Key words: *Water quality, LAM, Environmental pollution*

INTRODUCTION

Water pollution is a complex process which leads to changes in water composition, aquatic flora and fauna damage, and may lead to an inappropriate water quality state for economical or recreational use, being dangerous for human health [1, 2]. Water pollution with organic substances is caused by domestic wastewaters, cellulose, paper and food industry sewages and agriculture. In aquatic media the waste is degraded by bacteria, thus, a high amount of organic waste determines high bacterial growth that use oxygen and further cause death of fish and other aquatic life forms. Pollution with toxic substances originates from industrial sources and especially from chemical, mining and smelting industry.

One of main problem for this type of pollution is the high toxicity of these wastes. Pollution with nutrients (nitrates, phosphates) causes the eutrophication of waters due to the increase the algae population, which decomposes quickly, using high amounts of oxygen [3, 4].

Quality control of chemical measurements and assessment of their validity in accordance with ISO/IEC 17025:2005 Standard represent prominent targets of the Co-operation for Analytical Chemistry in Europe (EURACHEM) as an answer to ever higher demands of regulatory authorities and clients. Considering also the trend of economic globalisation, the issue of confidence and approval of measurement

results including the testing reports becomes more pregnant. The principal factors involved in the achievement of this goal are standardisation, accreditation and mutual recognise.

Quality control (QC) procedures of analysis are related with the quality assurance of samples or lots of particular samples and include: analysis of certified reference materials (CRMs), contaminated samples, duplicates and blanks as well as charts for quality control.

METHODS AND TECHNIQUES APPLIED IN LAM

The Research Institute for Analytical Instrumentation, ICIA, was established 20 years ago, having as main activity the research, design and realization of analytical laboratory instruments, as well as the elaboration of analytical methods for a large range of samples types. Together with the development of the Institute and following the requests on expertise in various fields, these preoccupations have extended towards research and development projects, programs on environment, health, technological modernizations and clean technologies.

The Institute holds a remarkable endowment that corresponds to the multidisciplinary character of research, design and specific execution of its working teams. The Institute has several research laboratories in chemistry, analytical chemistry, spectroscopy as well as design, mechanic and electronic execution workshops. This structure allows the tackling of a project on the whole, from the research stage up to the prototype elaboration stage. The institute have implemented and certified Quality System for the whole ICIA activity, according to ISO 9001:2000.

The Institute provides for customers precisely measured environmental values, targeted expert knowledge and competence to broaden their knowledge, secure decisions or optimise procedures and proceedings. This offers confidence in making decisions, cost efficiency and outstanding results. The targeted involvement of ICIA as a neutral, competent partner is a support in complex decision making processes.

The activity directions of the Institute are:

- **Research-design** in the following fields: environments, health, clean technologies, bio-energy, biomass, spectrometry and analytical instrumentation.
- **Technology Transfer** aiming to consolidate and development, of a national network of technology centers in the fields of environment, medical instrumentation, alimentation and nonconventional energies, aiming at both the valorification of the R&D results in the above mentioned fields and at the long term socio-economic development of the country, by strengthening the SMEs segment;

Chemical Analyses in the Laboratory for Environmental Analyses, which was accredited with SR EN ISO/CEI 17025:2005 reference by the Romanian Accreditation Association (RENAR). In the Laboratory, one has implemented the documents of the Quality System, according to the SR EN ISO/CEI 17025:2001 referential. The Laboratory possesses all the necessary resources for performing quality analyses: climatized rooms, measurement instruments and equipments that are metrological tested and calibrated; quality reagents; quality assurance methods for the analysis results; highly qualified and experienced personnel in the field of environmental analyses.

In the laboratory the following parameters are determined from water, air, soil and vegetable samples:

Anorganics Ammonia nitrogen, Nitrates, Nitrites, Total nitrogen, Bromides, Cyanides, Chlorides, Fluorides, Phosphates Total Phosphorus, Sulfates, Sulfurs, Sulfocyanides, Arsenic, Boron, Metals (Cadmium, Mercury, Lead, Iron, Total Chromium, Hexavalent Chromium, Nickel, Copper, Zinc, Selenium, Tin, Antimony, Aluminum, Barium, Beryllium, Bismuth, Calcium, Cobalt, Lithium, Magnesium, Molybdenum, Potassium, Silica, Silver, Sodium, Strontium, Titan, Vanadium, Zirconium).

Organics Total Organic Carbon (TOC), Volatile Organic Compounds (VOC), Total Hydrocarbon Content, Volatile Hydrocarbons, Polycyclic Aromatic Hydrocarbons (PAHs), Phenols, Chlorophenols, Chlorobenzenes, Absorbable Organic Halides (AOX), Volatile Halogenated Aliphatic Hydrocarbons, Polychlorinated Biphenyls (PCB), Organochlorine Pesticides.

Generals Acidity, Akalinity, pH, Conductivity, CBO5, CCO-Cr, CCO-Mn, Anionic Detergents, Hardness, Suspended Matters, Dissolved Oxygen, Petroleum Products, Total solids dried at 105°C, Sedimentable Solids, Petroleum ether-extractable substances.

Analytical techniques used in the Laboratory for Environment Analysis for water quality determination are: Ion Chromatography (IC), Flame Atomic Absorption Spectrometry (FAAS) , G**raphite Furnace Atomic Absorption Spectrometry** (GFAAS), Inductively Coupled Plasma Optical Emission Spectrometry (ICPOES), Inductively Coupled Plasma Mass Spectrometry (ICPMS), Atomic Fluorescence Spectrometry (AFS), Ultraviolet and visible spectrophotometry, Fourier Transform Infrared Spectrometry, pH-metry, potentiometry, conductometry, titrimetry, gravimetry, Gas Chromatography with Flame Ionization Detector, Electron Capture Detector, Thermal Conductivity detector and Mass Spectrometry.

Water analyses are done by several methods. The most common types of measurements are **gravimetric**, volumetric, **electrochemical** and **optical**. Instrumental methods are becoming increasingly popular, and instrumentation is getting "smarter" and easier to use with the inclusion of microprocessors. In the simplest case, a sample may just be placed in an instrument and a result read directly on a display. More often some physical separation technique or chemical procedure is needed before a measurement is made, in order to remove interferences and transform the *analyte* into a form which can be detected by the instrument.

For gravimetric analysis we use analytical balances sensitive to 0.1 mg (220A SCS, Precisa Instruments AG, Switzerland) or 0.01 mg (XA 60/220, Radwag, Czech Republic) with direct digital readouts. The volumetric analysis (titration) use a well-defined chemical reaction to measure the amount of a standard solution needed to react with certain amount of the sample. For the volumetric analysis along with the classical burettes our institute has an automatic potentiometric titrator (809 Titrando, Methrom, Switzerland). **Electrochemical** measurements involve placing *electrodes* in a water sample and measuring either an electrical potential (voltage) or a current, which is related to the concentration of analyte.

Depending on what they are designed to measure, electrodes can be simple pieces of metals (Au, Ag, Pt) or they may be elaborate systems with semi-permeable membranes and several internal electrodes and filling solutions. The instrumentation is able to read out directly in concentration units, after *calibration*, using one or more standard solutions of known concentration. Our institute has an oxygenmeter (INOLAB 740, WTW, Germany), a pHmeter (3340, JENWAY, UK) and three portable multiparameters with electrodes for pH, conductivity and oxygen measurements (Multi 350i, WTW, Germany).

Spectrophotometry involves measuring the intensity of a color in a solution and relating it to the concentration of the analyte. While some analytes are already colored, most of these analyses require the analyst to add some chemical *reagents* to a sample to produce a characteristic color. In our institute for the spectrometric determinations in the UV VIS range a Lambda 25 Perkin Elmer Spectrometer while in the IR range the SPECTRUM BX II FTIR spectrometer from Perkin Elmer is used.

In *gas chromatography*, the mixture of substances is injected into a capillary column, made of an inert material like glass, silica or stainless steel. The columns are usually contained in an oven, which may be programmable to raise the temperature at a controlled rate over time. The sample has usually been extracted into an organic solvent and concentrated by evaporation as a pretreatment step. Additionally other new sample pretreatment methods have been implemented: Solid Phase Extraction (SPE), Solid Phase Micro Extraction (SPME) and Stir Bar Sorptive Extraction (SBSE) with multiple advantages (simple and fast, solvent free methods). A continuous flow of an inert gas, such as argon, helium, or sometimes nitrogen, carries the evaporated mixture through the column. The substances are detected as they exit the column, usually by a technique that converts them into ions (electrically charged atoms or molecules). The ions are quantified by different detectors. In our institute the organic compounds from environmental samples are determined by GC-FID 7890A, GC-ECD 6890N, GC-MS 5975B, GC-TCD 3000A from Agilent Technologies, USA.

For the determination of drugs and hormones from environmental and food samples we use *high performance liquid chromatography coupled with mass spectrometer (LC/MS 3200 Qtrap, Applied Biosystems, USA) that can function as triple quadrupole or ionic trap. The ionization of the analyte is achived by electrospray ionisation (ESI) or atmospheric pressure chemical ionization (APCI) in function of the analyte volatility.*

The ion chromatography (IC 761 Compact, Metrohm, Switzerland) is used to determine charged inorganic or organic substances. The mobile phase is an aqueous solution while the stationary phase is made up of an *ion exchange resin*. The detectors usually measure electrical conductivity, although UV absorption can also be used. This technique can be used to measure the concentrations of several important inorganic anions, such as fluoride, sulfate, phosphate, and nitrate all in one analysis.

For the determination of metals in water samples the institute has an Atomic Emission Spectrometers with Inductively Coupled Plasma (ICP-OES Optima 5300DV Perkin Elmer) and an Inductively Coupled Plasma Mass Spectrometer (ICP-MS ELAN DRC II Perkin Elmer). Both ICPOES and ICPMS techniques use inductively coupled plasma as source but different analytical principles lead to different analytical performances. Approximately 70 elements form the periodic table can be analyzed using ICPOES technique. Inductively Coupled Plasma Mass spectrometry has even better performance than ICPOES, in multielement analysis and ETAAS regarding detection limits. Wide dynamic domain (7 orders of magnitude for ICPOES and 9 orders of magnitude for ICPMS) make these methods suitable for determining concentration on various domains, of trace and ultra trace levels [5-8].

In the laboratory, the microwave acid digestion is performed in order to determine the trace and ultratrace elements in a wide variety of environmental samples. The instruments utilized are: microwave digestion systems OY Analytical (Texas, USA) and Berghoff (Germany) with 12 Teflon vessels and pressure control device. The advantages of microwave digestions on classical digestions are: reduced analysis time, reduced sample and reagents volumes, volatile elements are retained in the system, reduced corrosion equipment, lower detection limits and sensitivity, process safety enhancement [9, 10].

ICPOES is generally superior in accuracy, precision, free from interferences and dynamic range to other analytical instrumentation. A multi-elemental solution can be analyzed in 1 min therefore; large volumes of data can be generated very fast. ICPMS offers much advantages than the other techniques, including two of its most attractive features — the rapid multielement capabilities of ICPOES, combined with the detection limits of GFAAS [11-14].

Strengths of the ICP-MS technique include: **Wide elemental coverage** - virtually all elements can be measured by ICP-MS, including alkali and alkaline earth elements, transition and other metals, metalloids, rare earth elements, most of the halogens and some of the non-metals; high sensitivity and low background signals combined give very low detection limits, f**ast analysis times [15].**

The cost of instrumentation, operation, and maintenance for ICP-MS are generally higher than those for ICP-OES, leading to higher cost per determination.

In the literature there are a high number of applications for these analytical techniques, including their coupling with other techniques for chemical speciation. Preparation and pre-concentration methods for samples with low metal concentrations that are below detection limit with normal setup are presented in a high number of papers [16-18].

References

1. Vasilescu I. D. *“Mediul si economia*”, Ed. Didactica si Pedagogica, R.A., Bucureºti, **1997**

2. Roman C., Abraham B., Levei E., Senila M., Miclean M., Tanaselia C., ProEnvironment, **2009**, 2, 114 - 117

3. Dutu M. *"Ecologie- filosofia naturala a vietii",* Ed. Economica, Bucureºti, **1999**

4. Visan S., Cretu S., Alpopi C. - *"Mediul inconjurator- poluare si protectie*", Ed Economica, Bucureºti, **1998**

5. Montaser A., Golightly D.V., Inductively Coupled Plasmas in Analytical Atomic Spectrometry – Second Edition – *VCH Publishers New York*, **1992**

6. Becker J.S., *Trends in Anal. Chem.*, **2005**, 24, 243-254

7. Bacon J.R., Greenwood J.C., Van Vaeck L., Williams J.G., *J. Anal. At. Spectrom.*, **2003**, 18, 955–997

8. Senila M., Abraham B., Konradi E., Roman C., Cordos E., A 33rd International Conference of the Slovak Society of Chemical Engineering, Tatranske Matliare, Slovakia, 22-26 May 2006.

9. Walas, S.; Wojtowicz, M.; Mrowiec, H.; Zegar, W., *Intern. J. Environ.*, **2004**, 84(13), 1023-1032

10. Tuzen, M., *Microchem. J.*, **2003**, 74(3), 289-297

11. Houk R.S., Fassel V.A., Flesch G.D., Svec H.I., Gray A.L., Taylor C.E., *Anal. Chem.*, **1980**, 52, 2283 – 2289

12. Thomas R., *Spectroscopy*, **2001**, 16, 26-30

13. Perkin-Elmer, *Guide to inorganic analysis*, *www.perkinelmer.com*

14. Senila M., Roman C., Konradi E., Frentiu T., Cordos E., A 33-a Conferinþa Internaþionalã a Societãþii Slovace de Inginerie Chimicã, Tatranske Matliare, Slovakia, 22-26 May 2006

15. Gurleyuk H., Brunette R.C., Howard C.R., Schneider C., Thomas R., *Spectroscopy*, **2005**, 20, 24-29

16. Pizarro I., Gómez M., Cámara C., Palacios M.A., *Anal. Chim. Acta*, **2003**, 495**,** 85–98

17. Simpson L.A., Hearn R., Merson S., Catterick T., *Talanta*, **2005**, 65, 900–906

18. Fan Z.F., Hu B., Jiang Z.C., *Spectrochim. Acta*, **2005**, 60B, 65-71

TEHNOLOGII SI ECHIPAMENTE PENTRU PRODUCTIA DE PELETI

TECHNOLOGY AND EQUIPMENT FOR PRODUCING PELLETS

Dr.ing. Marian TOPOLOGEANU* , Ing. Sebastian RADU**

*SC ICTCM SA Bucuresti
**SC SEBA Industrial SRL Bucuresti

Abstract: *This paper contains some aspects regarding the reduction of the negative impact generated by the economically activity over the environment by implementing technologies and equipments for achieving fuel products of high performance, as pellets, with the goal of the ecological capitalization of wastes with energetic potential.*
Key words: pellets, wastes, valorification, tehnology, equipment

INTRODUCERE

Reglementãrile cuprinse în legislaþia UE in domeniul ecologic, si anume de a se valorifica deºeurile lemnoase rezultate in urma prelucrãrilor primare si secundare, se poate respecta si prin plasarea unor utilaje de compactare staþionare inserate in fluxul tehnologic specific care sa transforme aceste deseuri in peleti la agenti economici din domeniu.

Peletii din lemn sunt un combustibil relativ nou aparut care raspunde noilor cerinte de utilizare a energiei "curate" si regenerative.

Peletii se produc prin presarea rumegusului rezultat la gatere, din tocatura de lemn a copacilor din doborâturi de vânt si în general din deseurile rezultate în urma prelucrarii lemnului.

Producerea peletilor, de obicei nu necesita aditivi sau lianti datorita rasinilor existente în mod natural în materia prima de baza.

Alinierea tarii noastre la cerintele ecologice ale standardelor de calitate UE impune recuperarea aproape totala a deseurilor din materiale lemnoase, precum si valorificarea lor integrala. In Romania , politica si strategia recuperarii si reciclarii deseurilor din materiale lemnoase se realizeaza prin CNRM Comisia Nationala pentru Recuperarea Materialelor din cadrul Ministerului Economiei si Finantelor.

Unul din marile avantaje ale producatorului roman de peleti in concurenta cu producatorii europeni este intinderea mare a suprafetelor forestiere din tara noastra. Astfel, nu se pune problema ca pentru a fabrica peleti sa se defriseze paduri. **PENTRU PRODUCTIA DE PELETI NU SE TAIE NICIODATA VREUN COPAC.**

Bogatele paduri ale României pot asigura materia prima pentru producerea de peleti dupa cum urmeaza :

- lemnul de slaba calitate rezultat în urma curatarii acestora;
- lemnul rezultat în urma taierilor programate;
- deseurile (rumegus, talaj) rezultate în urma prelucrarii acestuia în industria de profil.

La export peletii se vând cu cca. 190-200 EURO/tona, iar cheltuielile de productie sunt de cca. 30 EURO/tona. Nu se cunosc pana in prezent cazuri de alergie provocata de arderea sau de depozitarea peletilor in apropiere.

2. TEHNOLOGIA DE REALIZARE A PELETILOR

Reglementarile cuprinse in legislatia UE privind ecologia mediului referitoare la valorificarea aproape integrala a deseurilor din materiale lemnoase impune o tehnologie de prelucrare a acestor deseuri in vederea unei valorificari eficiente.

FLUXUL DE FABICATIE pentru productia de peleti porneste de la rumegusul rezultat in procesul de prelucrare al lemnului ca materie prima si parcurge urmatoarele faze pâna la distribuirea acestora catre beneficiari, dupa cum urmeaza :

- Pregatirea materialelor;
- Transportul;
- Stocarea;
- Uscarea;
- Macinarea;
- Peletizarea;
- Racirea;
- Ambalarea;
- Depozitarea / distribuirea.

In continuare este prezentate succint cuprinsul fiecarei faze; dupa cum urmeaza :

Pregatirea materialelor pleaca de la conceptul de baza ca in fluxul tehnologic de fabricatie al peletilor se utilizeaza materialul numai sub forma de rumegus .

Pentru transformarea in rumegus a materialelor, care se gasesc sub diferite forme, ca de exemplu, deseuri de lemn rezultate din fabricatia cherestelei sau fabricatia mobilei cu elemente masive, resturile ramase de la exploatarile forestiere, busteni, crengi, cioate, frunze, sau resturi de la culturile agricole exista diferite tipuri de tocatoare cu disc sau cu tambur, mobile sau stationare, precum si morile cu ciocane specifice pentru macinarea materialelor umede, in vederea obtinerii granulatiei necesare pentru utilizarea materialelor in fluxul de fabricatie. Deasemenea in operatia de pregatire a materialelor este inclusa si sortarea care este o operatie foarte importanta pentru materialele granulare lemnoase ce se gasesc in tara noastra, ca rezultat al proceselor tehnologice de prelucrare a masei lemnoase. Firmele specializate livreaza o serie de sortatoare stationare sau mobile, fie montate in containere, ce pot fi amplasate in exterior, fie cu utilizare numai pe spatii interioare, avand ca optionale diverse sisteme de separare magnetica.

Transportul materialelor pregatite pe fluxul tehnologic se realizeaza cu diferite sisteme in functie de starea materialelor pe flux precum si de capacitatea liniei de fabricatie. Sunt cunoscute diferite sisteme de transportoare mecanice, cu racleti, cupe sau benzi, transportoare pneumatice sau sisteme de transport prin vibratie.

Stocarea reprezinta o faza importanta in orice flux tehnologic pentru corelarea functionarii in mod continuu a diferitelor echipamente tehnologice. Sunt cunoscute diferite solutii de stocare verticale sau orizontale prevazute cu diferite sisteme de extractie si dozare a materialelor depozitate.

Uscarea materialelor granulare lemnoase, se realizeaza cu echipamente de ultima generatie, in flux continuu si cu sisteme complet automatizate, utilizand pentru producerea energiei termice necesare tot biomasa, respectiv rumegusul.

Macinarea materialelor granulare lemnoase este o operatie necesara pentru obtinerea unei anumite dimensiuni constante si omogene pentru a fi utilizate in masinile de fabricatie a peletului. Aceasta operatie se poate realiza cu ajutorul morilor cu ciocanele.

Alegerea unei mori cu ciocane pentru macinare se face pe baza mai multor criterii ca tipul materialului, sortimentatia, gradul de umiditate , capacitatea, etc. Fiecare tip de moara cu ciocane necesita la randul ei sisteme speciale de alimentare si evacuare pentru a fi integrata in fluxul de fabricatie, personalizate de specialistii nostrii de la departamentul de proiectare pentru fiecare linie tehnologica in parte.

Peletizare reprezinta operatia de transformare in combustibil a materialelor special pregatite de echipamentele componente ale fluxului tehnologic de fabricatie.

Aceasta operatie se realizeaza prin extrudere adica prin trecerea fortata si in mod continuu a unei cantitati foarte mari de material printr-un orificiu foarte mic.

Alegerea tipului de masina de peletizare precum si a sistemelor de alimentare, mixare si conditionare a materialului la intrarea in masina trebuie sa se faca in baza unor multiple criterii ce tin seama pe lânga capacitate dorita de tipul, sortimentatia si umiditatea materialului dar si de modul de pregatire in echipamentele utilizate anterior introducerii in masina de peletizat.

Racirea dupa operatia de peletizare, este operatia obligatorie in fluxul tehnologic de fabricatie datorita temperaturii ridicate a produsului finit la iesirea din matrita de extrudere.

Temperatura de iesire poate ajunge la 90 100^0 ceea ce produce deteriorarea produsului finit daca va fi in continuare stocat sau ambalat la aceasta temperatura. Sunt cunoscute diferite sisteme de racire in current de aer de capacitate diferite functie de productia ce se doreste a se realize.

Ambalarea produsului finit se realizeaza in saci de plastic cu greutatea incepand de la 10 15 kg si pâna la 25 kg functie de necessitate. De asemenea se mai utilizeaza si amblarea in saci mari din material special cu greutatea de 500 1000 kg pentru uzul industrial al acestor combustibili. Sunt cunoscute diverse masini de ambalat in pungi de plastic si sisteme de sigilare a pungilor atat in variant semiautomata cat si in varianta complet automatizata cu roboti de preluare si pozitionare pe paleti a sacilor cu peleti.

Depozitarea este operatia necesara in special pentru clientul final,inainte ca peletul sa fie utilizat pentru alimentarea centralelor termice respective. Sunt cunoscute diferite sisteme de depozitare functie de exigentele clientului.

Printre firmele care pot asigura echipamentele specifice fiecarei operatii se numara si SC SEBA Industrial SRL Bucuresti cu care institutul nostru colaboreaza foarte bine.

3. Concluzii.

Prin implementarea tehnologiilor de realizare a peletilor si realizarea echipamentelor specifice se va aduce o contributie importanta la reducerea poluarii mediului prin valorificarea deseurilor de rumegus.

4. Bibliografie

[1] Linii de fabricatie peleti. www.seba.ro;
[2] Linii de fabricatie peleti. www.akahl.de;
[3]Linii de fabricatie peleti. www.ecopellets.ro;
[4] Linii de fabricatie peleti. www.promeca.it;
[5] Contract PNCDI nr. 251 www.ictcm.ro/pncdi2007_2008/index.html.

CERCETĂRII PRIVIND REALIZAREA UNEI TEHNOLOGII, PENTRU RECOLTAREA ŞTIULEȚILOR ÎN FAZA DE PRECOACERE

STUDIES REGARDING THE IMPLEMENTATION OF A NEW TECHNOLOGY FOR HARVESTING CORN COBS BEFORE RIPENING

Dr. ing. Lucian STANCIU*, Dr. ing. Emil VOICU*, Prof. on. dr. ing. Iosif COJOCARU*, ing. Marius STAN*, Dr.ing. Alexandru COCIU**

* INMA Bucureºti
** INCDA Fundulea

***Abstract**: For applying this technology is required a corn cob reaper with 2 lines, including detachment and chopping with a single roller, adapted for a towed furrow combine, for harvesting corn cobs before ripening, of a Corn-Cob-Mix-CCM.The equipment works with tractors having the power of min.65 HP. The corn cob reaper adapted for the furrow combine CTF contributes at the diversification of the range of machines for harvesting furrows, according to the actual trends in what regards the increasingly animals brreding.*

***Key words**:* use corn cobs before ripening

1. INTRODUCERE

Dezvoltarea ºi rentabilizarea producţiei agroalimentare, creºterea volumului ºi calităţii producţiei agricole prin diminuarea pierderilor din sectorul zootehnic se pot realiza numai prin perfecţionarea ºi modernizarea maºinilor ºi echipamentelor tehnice utilizate ºi prin creºterea gradului de mecanizare a lucrărilor din cadrul tehnologiilor de recoltare ºi conservare a furajelor sub forma unui amestec de boabe ºi ciocălăi ºi a porumbului zaharat pentru uz uman. În plan, acest lucru este posibil numai prin realizarea unor noi tipuri de maºini ºi echipamente tehnice specializate, cu fiabilitate ridicată ºi costuri de exploatare scăzute, care să asigure aplicarea unor tehnologii de recoltare ºi conservare a plantelor furajere cu parametri tehnico-economici superiori.

Conservarea porumbului pastă prin însilozare reprezintă păstrarea nutreţurilor verzi, menţinerea valorii nutritive a acestora la un nivel ridicat în lipsa aerului ºi la o umiditate cuprinsa între 60...70% ºi are următoarele avantaje:

-însilozarea ºtiuleţilor de porumb sub formă de amestec boabe ºi ciocălăi realizează un nutreţ foarte valoros din punct de vedere nutritiv;

-pierderile de ºtiuleţi de porumb în stare de precoacere de la recoltare până la administrare la animale sunt minime;

-cheltuielile pentru depozitare ºi administrare sunt reduse, iar necesarul de forţa de munca este mic;

-pierderile de substanţe nutritive sunt minime, eliminându-se riscurile vremii nefavorabile,în cazul staţionarii porumbului furajer pe câmp.

În cadrul diferitelor tehnologii de recoltare a ºtiuleţilor de porumb în faza de precoacere producătorii de echipamente agricole, folosesc îndeosebi următoarele variante:

-recoltarea ºtiuleţilor cu combina în câmp ºi tocarea, mărunţirea ulterioară în fermă;

-recoltare ºi tocare simultană direct în câmp.

Un concept relativ nou, arată că amestecul de boabe ºi bucăţi de ciocălăi-CCM (Corn-Cob-Mix) este din ce în ce mai utilizat ca sursă mare de energie pentru creºterea bovinelor ºi porcinelor, reducând dependenţa de concentrate. Fermierii care introduc 70-75% porumb siloz în raţia zilnică arată că nu există o nevoie reală mai mare de surse de fibre pentru tampon de stomac CCM poate oferi aceasta, constituind în acelaºi timp un stoc de impuls cu energia necesară.

Din punct de vedere al metabolismului animalelor nu exista nici o diferenţă în ceea ce priveºte gestionarea regimului CCM, comparativ cu porumbul siloz, costurile de producţie fiind similare.

Recoltarea cu combina tractată de furaje CTF la care se ataºează culegătorul de ºtiuleţi, execută concomitent cu detaºarea ºtiuleţilor si tocarea tulpinilor lăsând pe sol o miriºte înaltă ºi resturi vegetale, excelente pentru promovarea unor prelucrări ecologica la culturile ulterioare. Conform previziunilor specialiºtilor din agricultură, miriºtea constituie mulci care ajută la minimalizarea riscurilor de eroziune a solului peste iarna.

2. DESCRIEREA AGREGATULUI CTF-C2

2.1 CARACTERISTICI FUNCŢIONALE ªI CONSTRUCTIVE ALE CULEGĂTORULUI

Agregatul format din combina tractată de recoltat furaje CTF echipată cu culegătorul de ºtiuleţi C2 ºi remorca pentru tocătură este prezentat în figura 1.

Fig. 1 Vedere laterală al culegătorului de ºtiuleţi C2 în agregat cu combina tractată de furaje CTF în lucru

Culegătorul C2 este compus dintr-un cadru pe care se montează cele două secţii de detaºare-tocare, un melc transportor, o transmisie ºi învelitorile secţiilor cu vârfurile aferente.

Principalele caracteristici constructive si funcţionale sunt:

Tipul culegătorului.....purtat pe combina de recoltat furaje
Acţionare.....de la combină prin transmisie cu lanţ
Tipul aparatului de detaºare-tocare.....cu valţuri rotitoare cu cuţite
Nr. rânduri recoltate, mm.....2 rânduri (700 mm între rânduri)
Numărul valţurilor pe secţii.....1
Numărul cuţitelor pe valţ, buc.....40
Frecvenţa de rotaţie a valţurilor, min^{-1}.....800
Frecvenţa de rotaţie a lanţurilor de transport ºtiuleţi min^{-1}.....255
Viteza de lucru, km/h.....2,2-7

2.2 Descriere funcţională

În procesul de lucru combina se deplasează lateral dreapta faţă de tractor (poziţia proţapului spre dreapta) asigurând deplasarea culegătorului cu toată lăţimea de lucru în lan.

Acţionarea organelor de lucru ale combinei ºi ale culegătorului se realizează de la priza de putere a tractorului, cu turaţia de 540 rot/min prin intermediul unor transmisii cardanice prevăzute cu un cuplaj de protecţie la suprasarcină.

ªtiuleţii de porumb, recoltaţi de culegătorul C2 sunt preluaţi de valţurile de alimentare ale combinei de furaje care îi împinge cu vitează constantă spre toba de tocare. Aici, datoritã cuţitelor tobei ºi a contracuţitului, ºtiuleţi sunt fragmentaţi (tocaţi) ºi aruncaţi prin conducta de evacuare a materialului, într-un mijloc de transport (remorcă) care se deplasează paralel cu combina sau este tractat de combină.

Reglarea lungimii de tocare a furajului se realizează prin schimbarea poziției roților de lanț montate pe axele exterioare ale cutiei de distribuție care conduce la modificarea turației (vitezei periferice) a celor patru valțuri de alimentare și obținerea mai multor trepte de lungimi de tocare cuprinse între 8,5-35 mm.

3. INCERCARI ÎN CONDIȚII DE LABORATOR-CÂMP

3.1 Condiții de lucru

Încercările în conditiile de laborator câmp ale culegătorului pentru recoltarea știuleților de porumb și obținerea de amestec boabe ciocălăi (Corn-Cob-Mix), atașat combinei tractate de recoltat furaje CTF, în agregat cu tractorul de 65 CP s-au efectuat pe terenurile experimentale ale INMA București și la o fermă din cadrul INCDA Fundulea pe parcele reprezentative ca producție.

Aspecte ale lanului de porumb în care s-au efectuat încercările, hibrizii de porumb utilizați și schema de amplasare a experimentelor sunt prezentate în figurile 2 și 3.

Fig. 2 - Aspectul lanului de porumb în care s-au executat încercările și tipurile de hibrizi de porumb din parcele

Fig. 3 Schema de amplasare a experimentelor - I.N.C.D.A Fundulea 2009

Repetiția	I												II											
Hibridul	1	2	2	1	1	2	3	4	4	3	3	4	4	3	3	4	4	3	1	2	2	1	1	2
Densitatea	1	1	2	2	3	3	1	1	2	2	3	3	2	2	1	1	3	3	1	1	2	2	3	3

Factorul A: HIBRIDUL 1- F22/06
2 – Generos
3 – Neptun
4 – Star

Factorul B: DENSITATEA 1 – 56500 plante/ha (distanta intre plante pe rand 25,2 cm)
2 – 66500 plante/ha (distanta intre plante pe rand 21,4 cm)
3 – 73800 plante/ha (distanta intre plante pe rand 19,3 cm)

3.2 Indici calitativi de lucru şi pierderile de material la recoltat porumb știuleți sunt determinați în următoarele condiții:

- tractorul folosit U650
- turația motorului 1800 rot/min
- turația prizei de putere 540 rot/min
- umiditatea medie a plantelor 62%

sunt prezentați în tabelul 1.

Tabelul 1 - Valorile indicilor calitativi de lucru º i ale pierderilor de material

Denimirea indicelui	UM	Valoarea determinatã
Numãrul de rânduri recoltate	buc	2
Distanþa între rânduri	mm	700
Producþia la ha (ºtiuleþi)	t/ha	11.86
Înãlþimea de tãiere (miriºtea)	mm	160-550
Viteza de lucru	Km/h	2.8-2.95
Pierderi de material totale	%	sub 3
Pierderi sub formã de: -ºtiuleþi cãzuþi pe sol	%	0.35

Gradul de tocare a tulpinilor s-a determinat pentru tulpinile de porumbului după detaºare ºtiuleþilor iar repartizarea tocãturii pe diferite lungimi de tocare este prezentatã în tabelul 2.

Repartizarea lungimii tocaturii pe clase de lungimi (înãlþimea de tãiere H_t = 200mm) pentru un reglaj teoretic de 20 mm precum º i un eºantion de tocãturã realizat de toba de tocare a combinei sunt prezentate în figura 4.

Tabelul 2- Lungimea de tocare a tulpinilor de porumb

Lungimea de tocare a tulpinilor (mm)	Înălțimea de tăiere a tulpinilor – H_t			
	H_t =200,00 (mm)		H_t=310 (mm)	
	masa (g)	%	masa (g)	%
0 - 8 , 5	108.36	17,62	109.18	19,96
8,5 -15	149.69	24,34	109.89	20,09
15 - 22	144.40	23,48	116.18	21,24
22-35	101.84	16,56	98.24	17,96
35-50	40.48	6,64	67.83	12,40
> 50	69.86	11.36	45.67	8,35
TOTAL:	615	100	547	100

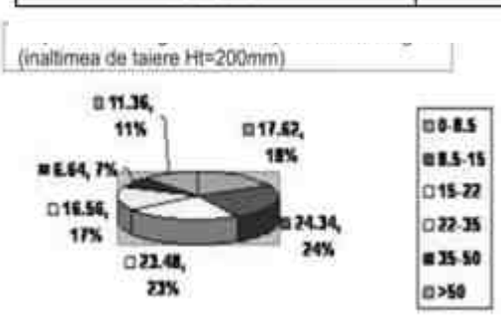

Fig. 4 Repartizarea lungimii tocãturii pe clase º i un eºantion de tocãturã realizat de toba de tocare a combinei

3.3 Indicii energetici determinaţi: momentul la priza de putere, turaţia prizei de putere, forţa de tracţiune, forţa de apăsare pe proţap, puterea pentru tractarea combinei şi pentru acţionarea în timpul lucrului sunt prezentaţi în tabelul 3.

Pentru determinarea acestor indici s-a folosit metoda tensometricã utilizând computer cu pachet de programe şi SOFT.

Tabelul 3 - Valorile indicilor energetici

Măsurătoarea efectuată	UM	Proba		
		Acţionare în gol	În lucru V=2.81 km/h	În lucru V=2.95 km/h
Turaţia motorului	Rot/min.	1853	1850	1813
Turaţia prizei de putere	Rot /min	556	555	544
Moment mediu	daNm	7,75	17,04	20,092
Putere măsurată la priza	kW	5,9	21,246	21,837
Forţa de tracţiune la bara de cuplare	daN	-	750	753
Forţa de apăsare a proţapului pe tractor	daN	255	262	262
Putere efectivă pentru tractarea combinei	kW	-	8,614	8,613
Putere efectivă pentru acţionare în timpul lucrului	kW	18,62	29,86	30,45

Tabelul 4 Indicii de exploatare

Indicator	U.M.	Valoarea determinată pentru	
		Viteza de 2.8 Km/h	Viteza de 2.95 Km/h
Producţia de plante la hectar	t/ ha	32	31.5
Producţia de ştiuleţi	t/ ha	11,86	10,95
Capacitatea de lucru într-o ora din timpul efectiv (W_{ef})	t/ h	4,621	4,483
	ha/h	0,39	0,409
Capacitatea de lucru într-o oră din timpul schimbului (W_{07})	t/ h	3,207	3,111
	ha/h	0,27	0,284
Capacitatea de lucru orară de performanţă (W_p)	t/ h	3,35	3,25
	ha/h	0,282	0,297
Coeficientul siguranţei tehnologice (k_{41})	-	0,976	
Coeficientul de siguranţă tehnică (k_{42})	-	0.964	
Coeficientul de siguranţă în exploatare (k_{42})	-	0,942	
Coeficientul de folosire a timpului schimbului (k_{07})	-	0,694	
Consum de motorină	l/t	1,183	1,121

4. DETERMINAREA INDICILOR DE EXPLOATARE

Indicii de exploatare ai culegãtorului C2 pentru recoltarea ºtiuleþilor de porumb în vederea obþinerii unui amestec boabe ciocãlãi CCM (Corn-Cob-Mix), montat pe combina tractatã de recoltat furaje CTF, în agregat cu tractorul de 65 CP, cu remorca pentru materialul recoltat cuplatã în spatele combinei s-au determinat în aceleaºi condiþii în care au fost determinaþi indicii calitativi de lucru.

În figurile 5 ºi 6 sunt prezentate aspecte din timpul lucrului ºi ale miriºtei de porumb dupã recoltare, în zona unde s-au efectuat experimentãrile.

Indicii de exploatare au fost determinaþi în 4 zile consecutive dupã stabilirea reglajelor ºi a regimului optim de lucru, iar valorile lor sunt prezentate în tabelul 4.

Analizând datele din tabelul 4 rezultã urmãtoarele:

? Capacitatea orarã de lucru din timpul efectiv (W_{ef}) a avut valoarea 4,621 t/h (0,39 ha/h) pentru viteza de lucru de 2,8 km/h ºi de 4,483 t/h (0,409 ha/h) pentru viteza de lucru de 2,95 km/h.

? Capacitatea de lucru orarã de performanþã a fost de 3,35t/h (0,282 ha/h), rezultând un coeficient de folosire a timpului schimbului de 0,694

? Coeficientul siguranþei tehnologice a avut valoarea de 0,976 care aratã cã organele de lucru ale culegãtorului au lucrat corespunzãtor, însã cu unele înfundãri cauzate de ruperea vârfurilor de tulpini de porumb (când umiditatea acestora a fost peste 50%) odatã cu detaºarea ºtiuleþilor conducând la creºterea masei vegetale transportatã de echipament spre fluxul tehnologic al combinei de furaje. Acest fenomen dispare în cazul unui lan de porumb cu umiditate de 40…45%.

? Consumul specific de motorinã a fost de 1.183 l/t corespunzãtoare vitezei de 2,8 km/h ºi de 1.121 l/t pentru viteza de lucru de 2,95 km/h.

Fig. 4 - Vedere frontalã a agregatului tractor + combinã tractatã de recoltat furaje CTF cu culegatorul de ºtiuleþi C2 + remorca de furaje, în lucru

Fig. 5- Vedere a miriºtei de porumb dupã recoltare

5. CONCLUZII

Culegãtorul constituie o noutate pe plan naþional, fiind conceput pentru promovarea unei noi ***tehnologiei de recoltare a ştiuleților în faza de precoacere şi obținerea unui amestec de boabe ciocălăi (Corn-Cob-Mix) în vederea însilozării.***

Având în vedere complexitatea problemelor legate de aplicarea acestei noi tehnologii se impune elaborarea ***unor tehnologii inovative*** pentru recoltarea ºi însilozarea biomasei vegetale obþinute din furaje de porumb, în vederea îmbunãtãþirii **calității nutritive a hranei şi a sănătății animalelor.**

Bibliografie

1. Voicu E. „Dinamica ºi energetica agregatului, tractor combinã tractatã pentru recoltat furaje", Ed. Terra Nostra, Iaºi 2009
2. Stanciu L. Gangu V., Pirna I., Cojocaru I. „Studii ºi cercetãri privind vibraþiile la echipamentele de recoltat porumb dotate cu secþii cu un singur valþ de detaºare a ºtiuleþilor ºi tocare a tulpinilor". INMATEH Numãrul 2/2006
3. Mãniºor, P.,º.a. „Tehnologii ºi utilaje noi pentru prepararea furajelor de volum", Ed.Ceres, 1991

APPLICATIONS OF THE TECHNIQUE OF DIFFUSIVE GRADIENTS IN THIN FILMS (DGT) FOR METALS DETERMINATIONS IN RIVER WATERS AFFECTED BY MINING ACTIVITIES

Marin ª enilã, Erika Levei, Lãcrimioara ª enilã, Marius Roman, Mirela Miclean,

Abraham Bela, Mircea Chintoanu
INCDO-INOE 2000, Research Institute for Analytical Instrumentation, 67 Donath, 400293, Cluj-Napoca, Romania, e-mail: icia@icia.ro

Abstract:

Metals bioavailability in river waters from a small region situated in NW of Romania, Certej catchments, strongly affected by mining activities, was studied. The study regarding metals bioavailability of was performed using a simple but very efficient mean of speciation in water: the technique of diffusive gradients in thin films (DGT). The principle of the method was verified using solutions with known concentrations.

Dissolved metals DGT, metals in colloids and in metals particulate from water were determined. Only a small part from total concentration of Mn is in dissolved form (bellow 5%), an important amount is in particulates. In case of Fe, around 50% from total metals content are in dissolved form, and a low part is in particulates. Similar distribution as in case of Mn has Zn, a small part being in dissolved form. In case of Ni and Cu, around 30 - 50% from total contents is in dissolved form. In case of Co and Cd, the dissolved DGT form is in low percent (bellow 5%), even if filterable content are around 50% or higher.

Key words: *DGT, speciation, water quality, metals, river waters, mining activities*

Introduction

The Certej catchment is situated in the Metaliferi Mountains belonging to the Southern Apuseni Mountains in the Western Carpathians in Romania. It covers a relatively small area of 78 km^2 (Figure 1). The Certej river, 18 km long, is a tributary to the Mures river which flows into the Danube. The average water discharge in the river not gauged is estimated to about 0.8 to1 m^3s^{-1}.

The technique of diffusive gradients in thin films (DGT) is used for in-situ measuring of labile trace metal species in sediments and surface waters. DGT can be used for many different purposes, including: in situ measurements, monitoring (time averaged concentrations), speciation (labile inorganic and/or organic species), bioavailability (effective concentration) (Davison at al 1994, Gimpel et al 2003, Tusseau et al 2003, Zhang et al 1995, Zhang et al 2000, Zhang et al 2001, Scally et al, 2003). The device is deployed in the water for a fixed period of time and than the mass of accumulated trace metals in the binding layer is measured. Knowing the diffusion layer thickness, the mean concentration in solution during deployment can be calculated using Fick's first law of diffusion.

$$F = D\, dC/dx \qquad (1)$$

where: D is the diffusion coefficient and dC/dx is the concentration gradient.

If diffusion coefficients of ions in the gel are the same as in water, the flux is given by equation where C is the bulk concentration of an ion and C' its concentration at the boundary between the binding layer (resin-gel) and the ion permeable layer (diffusive gel):

$$F = D(C-C')/(g+) \quad (2)$$

If the free metal ions are in rapid equilibrium with the resin, with a large binding constant, C' is effectively zero providing the resin is not saturated. In well stirred solutions the boundary layer thickness, , is negligibly small compared to the thickness of the diffusive layer, g:

$$F = D\,C/g \quad (3)$$

In practice the DGT device is deployed for a fixed time, t. On retrieval the resin-gel layer is peeled off and the mass of the accumulated ions in this layer is measured. The ions in the resin-layer are eluted with a known volume, Ve, of solution 1M HNO_3, in the case of metals bound to Chelex. The concentrations of ions in the eluent, Ce, are than measured by a spectrometric technique. The ratio of the eluted to bound metal is known as the elution factor, fe. Values of fe of 0.8 have been reported. Taking the elution factor into account the accumulated mass of ions in the resin-layer can be calculated:

$$M = Ce(Vg+Ve)/fe \quad (4)$$

where Vg, the volume of gel in the resin layer, is often negligibly small. The measured mass, M, can be used to calculate the flux through the known area of the device, A:

$$F = M/At \quad (5)$$

Equating (3) and (5) and rearranging:

$$C = Mg/DtA \quad (6)$$

demonstrates that the concentration in the bulk solution can be calculated from the known values of g, D and A, the measured deployment time, t, and accumulated mass, M. This feature of DGT whereby concentration is calculated from defined quantities make it ideal for in situ use as there is no requirement for calibration.

The DGT method can be used also for measuring of fluxes in water sediments and soils (Allan et al 2007, Ruello et al 2008) or to predict the accumulation and availability of metals to plants (Zhang et al 2001, Roulier et al, 2008).

Experimental part

Sampling

The *in situ* monitoring was performed in June 2007, by placing the DGT devices for two days in Certej river water. Three stations were selected for the DGT devices deposition (C1, C2 and C3). The sampling points are presented in figure 1. On each station, three DGT devices were deposited and the mean of the three parallel measurements was calculated.

On the place, pH was measured by a pH meter (WTW Multiline) and a sample for heavy metals was filtered through 0.45 µm cellulose acetate filter by using a syringe. Samples for dissolved and total heavy metals were filled in polyethylene bottle containing the necessary volume of nitric acid suprapure to get a pH of 2.

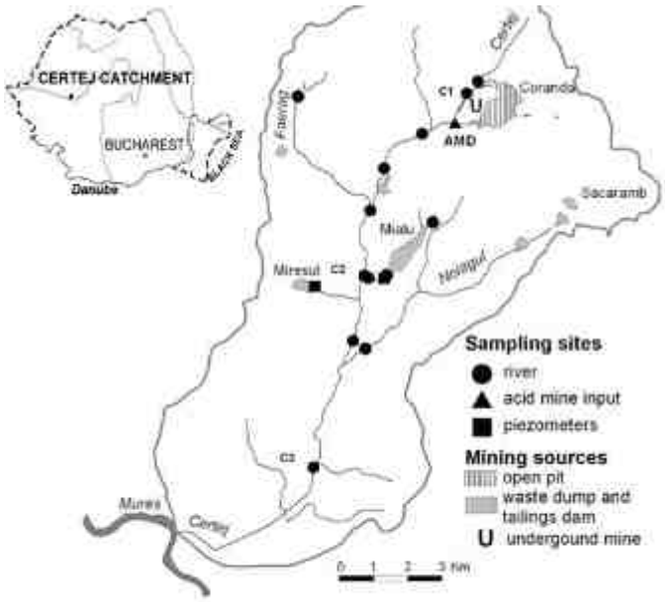

Fig. 1 Certej River catchment, sampling stations and mining sites

Materials

All reagent used were of analytical grade (suprapure nitric acid). Ultarpure water was used obtained using a Millipore system. Merck chemicals had the following qualities: 32 % (*m/m*) HCl and 65 % (*m/m*) HNO_3 both puriss p.a. Argon from Gaz SRL Cluj-Napoca, Romania (5.0 quality) was used as plasma support gas.

Stock multielement solutions of 1000 ? g mL^{-1} containing Cu, Zn, Fe, Co, Ni, Cd and Mn from Merck were used.

DGT deployment units from DGT Research Ltd Lanchester, UK were used. A plastic base (2.5 cm diameter) loaded with resin gel, diffusive gel and filter with an outer sleeve over it to leave a 2.0 cm diameter window. Ion-exchange resin layer Chelex-100, 4 mm thickness; diffusive gel DGT cross-linker with open pore (allylglycidylagarose) 8 mm thickness; membrane filter of 0.145 mm thickness were used. The used devices are presented in figure 2

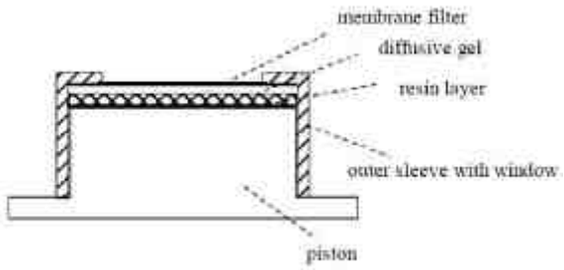

Fig. 2. DGT deployment devices

Syringes with mountable filter holders containing 0.45 µm cellulose acetate filter from Sartorius were used for water filtration on the field.

Instrumentation

Instrumental determinations for metals were done using an ICP-MS ELAN DRC II, Perkin-Elmer with reaction cell for reducing the interferences.

An OI Analytical Microwave digestion unit was used for samples digestion for total metals determination. pH was measured by a pH meter (WTW Multiline).

Results and discussions

The method principle was verified in the lab using a synthetic solution with 0.2 µg l^{-1} from each metal that was measured in the field. Good recoveries ranged between 0.85 - 1.0 were obtained for all metals.

On the field, acidic pH in all sampling stations was measured: 3.9 in C1; 4.2 in C2, 4.9 in C3.

Total, total dissolved and labile DGT concentrations of Cu, Zn, Fe, Co, Ni, Cd and Mn were measured simultaneously by ICP-MS. The total and total dissolved concentrations were measured directly by ICP-MS.

Dissolved metals are metals measured using the DGT method. The metals content in colloids was calculated as differences between metals in filtrate water using 0.45 µm cellulose acetate filter. The metals content in particulates was calculated as differences between metals in unfiltered waters and metals in filtered waters.

The obtained results for Cu, Zn, Fe, Co, Ni, Cd and Mn are presented in figures 3, 4 and 5. The metals were represented in different graphs due to the different orders of magnitude.

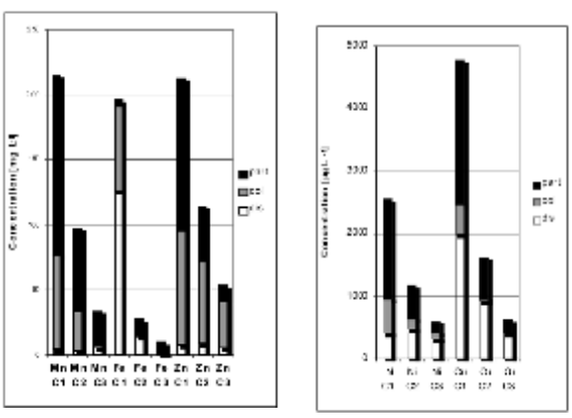

Fig. 3 and **fig. 4**. Metals distribution in dissolved form, in colloids and in particulate in Certej river (dis= DGT; col= filtrate – DGT; part = total - filtrate (0.45µm))

The dissolved for of metals are considered with a high bioavailability for the aquatic system.

Only a small part from total concentration of Mn is in dissolved form (bellow 5%), an important amount is in particulates. In case of Fe, around 50% from total metals content are in dissolved form, and a low part is in particulates. Similar distribution as in case of Mn has Zn, a small part being in dissolved form.

In case of Ni and Cu, around 30 - 50% from total contents is in dissolved form.

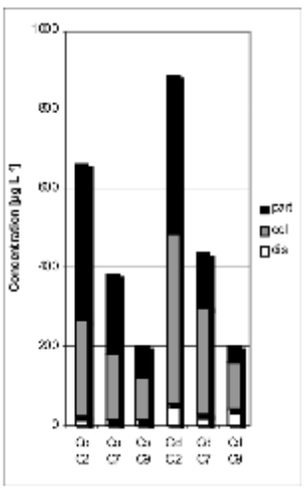

Fig. 5. Metals distribution in dissolved form, in colloids and in particulate in Certej river (dis = DGT; col = filtrate – DGT; part = total - filtrate (0.45µm))

In case of Co and Cd, the dissolved DGT form is in low percent (bellow 5%), even if filterable content are around 50% or higher.

Very high concentrations of manganese, iron, zinc, copper and cadmium were found in filtered and unfiltered waters clearly indicate an input of AMD. All analysed metal concentrations go far beyond the European quality standards in rivers. Certej River inputs of heavy metals into Mures River are substantial, although the water discharge in Mures River is about 20 to 50 times larger than in Certej River.

The relative high concentrations of metals in filtered samples are due to colloidal particles with size bellow 0.45 microns.

Conclusions

Our study demonstrates that DGT technique can be applied in waters with low pH, but a decreasing of recoveries was observed at pH below 4.

The DGT-labile species of Mn, Zn, Co and Cd amounted to 5–10% of the total dissolved concentrations, Fe, Ni and Cu to 40-80%. These demonstrate that not all amounts of metals in waters filtered by 0.45 microns filter are in dissolved, bioavailable form, and also demonstrate that DGT techniques is a very efficient mean for in-situ speciation.

A strong pollution of Certej River with heavy metals can be observed. In the sampling stations from Certej the pH values ranged between 3.9 – 4.9 indicate a strong impact of acid mining drainages.

References

1. Allan IJ, Knutsson J, Guigues N, Mills GA, Fouillac AM, Greenwood R, (2007) Evaluation of the Chemcatcher and DGT passive samplers for monitoring metals with highly fluctuating water concentrations, *J. Environ. Monit.*, 9, 672-681

2.Davison W, and Zhang H (1994), In situ speciation measurements of trace components in natural waters using thin-film gels, ***Nature,*** 367, 546-548

3. Davison W, Zhang H and Miller S (1994) Developing and applying new techniques for measuring steep chemical gradients of trace metals and inorganic ions at the sediment-water interface. ***Mineral. Mag***. , 58A, 215-216

4. Gimpel J, Zhang H, Davison W (2003), In-situ trace metal speciation in lake surface waters using DGT, dialysis and filtration, ***Env. Sci. Technol.,*** 37, 138-146

5. Roulier J L, Tusseau-Vuillemin M H, Coquery M,. Geffard O and Garric J (2008) Measurement of dynamic mobilization of trace metals in sediments using DGT and comparison with bioaccumulation in *Chironomus riparius*: First results of an experimental study, ***Chemosphere,*** 70, 925-932

6. Ruello ML, **Sileno M**, **Sani D**, **Fava G** (2008), **DGT use in contaminated site characterization. The importance of heavy metal site specific behaviour, *Chemosphere*,** 70, 1135-1140

7. Scally S, Davison W, Zhang H (2003), In situ measurements of dissociation kinetics and labilities of metal complexes in synthetic solutions using DGT, ***Env. Sci. Technol***., 37, 1379-1384

8. Tusseau-Vuillemin M, Gilbin R, Taillefert M (2003), A dynamic numerical model to characterize labile metal complexes collected with diffusion gradient in thin films devices ***Env. Sci. Technol***., 37, 1645-1652

9. Zhang H, and Davison W (2001), In situ speciation measuements. Using diffusive gradients in thin films (DGT) to determine inorganically and organically complexed metals, ***Pure Appl. Chem***., 73, 9-15

10. Zhang H, Davison W (2000), Direct In Situ Measurements of Labile Inorganic and Organically Bound Metal Species in Synthetic Solutions and Natural Waters Using DGT, ***Anal. Chem***., 72, 4447-4457

11. Zhang H, Davison W, and Grime GW (1995), New in situ procedures for measuring trace metals in pore waters. Dredging, Remediation, and Containment of Contaminated Sediments. ***ASTM STP*** 1293, p 170-181

Zhang H, Zhao F J, Sun B, Davison B, McGrath S P (2001), A new method to measure effective soil solution concentration predicts Cu availability to plants, ***Env. Sci. Technol***., 35, 2602-2607

DEVELOPMENT AND IMPLEMENTATION OF TECHNOLOGIES AND EQUIPMENTS FOR ACHIEVING FUEL PRODUCTS LIKE PELLETS

DEZVOLTAREA SI IMPLEMENTAREA UNOR TEHNOLOGII SI ECHIPAMENTE PENTRU OBTINEREA DE MATERIALE DE COMBUSTIE PRECUM PELETII

Dr.ing. Marian TOPOLOGEANU*
Prof. dr.ing. Radu Catalin TARCA**
ing. Sebastian RADU***

*SC ICTCM SA Bucuresti;
**Universitatea din Oradea
***SC SEBA Industrial SRL Bucuresti.

Abstract: *This paper contains some aspects regarding the reduction of the negative impact generated by the economically activity over the environment by implementing technologies and equipments for achieving fuel products of high performance, as pellets, with the goal of the ecological capitalization of waists with energetic potential.*

Key words: *pellets, waists, capitalizing, technologies, equipments*

1. BRIEF HISTORY

The production and usage in full blast of pellets resulted from pressed sawdust appeared in the second part of the last century like so:

In the 1970 years, is built the first production unit in Brownsville SUA.

In 1983 in the USA is sold the first residential heating station on pellets.

In the 1990 years in Sweden started the industrial production of wood pellets as fuel..

In 1996 there are over 20 heating station manufacturers and over 80 pellet manufacturers. Already over 1.000.000 tones of pellet heat the houses in North America.

2. INTRODUCTION

Allaying our country to the ecological requests imposed by the UE environment standards, and achieving the commitments made by Romania from the beginning of the negotiation process at Chapter 22 of the community acquisition, requires total elimination of waists.

Romania, according to the official records, has a surface with forests of approximately 6.300 thousand ha, representing approx. 275 from the entire country surface. The Romanian forest fund is about 0,30 ha/ inhabitant.

The average forest cut realized between 200-2005 was 13.000.000 m^3/year. It results 550.000 m^3/year of wood transformed in sawdust, and a large quantity of chips and other waist products.

The regulation presented in the UE legislation in the ecological field, like capitalizing the wooden waists resulted from the firs and second processes, can be realized by placing some stationary compaction equipment, inserted in the technological flow specific for the economical agent from this field.

The wooden pellets are a pretty new fuel appeared as a new request of using “clean” and recycling energy. These represent an alternative source to a more clean home heating, and as a result of the classical fuel price adjustment to the European prices soon in Romania it will be a more economical and affordable solution.

The pellets are produced by pressing sawdust resulted at the saw mill, from wood hash of the trees put down by the wind and generally from waists resulted after wood processing.

The pellet production, usual doesn't require additive and binders due to the resins naturally existing in the raw materials.

3. ENVIROMENT PROTECTION

Alignment to the ecological requirements of the environmental quality standards of the UE requires almost total retrieval of wood material waists, and their full recovery. In Romania, the politic and the strategy of waists recovery and recycling from wood materials is accomplished by CNRM - The National Commission for the Material Recovery from the Financial and Economical Ministry.

One of the great advantages of the Romanian pellet manufacturer in competition with the European producers is the large area of forests in our country. So, we cannot talk of forest clearing as to produce pellets. FOR THE PRODUCTION OF PELLETS WHERE WILL BE NO TREE CUT DOWN.

The rich forests of Romania can assure the raw material for producing pellets as it follows:

? low quality wood resulted from its cleaning;

? the wood resulted from the scheduled cuttings;

? waists (sawdust, chips) resulted after wood processing in the industry.

We cannot neglect this last source of raw material. Every year a forest produces thousand of tones of wood material which, by natural causes, without human intervention, reaches the forest floor; for example old trees, landslides or very strong winds. In conditions that more and more forest surfaces are given back to private owners and the European legislation is quite drastic in terms of environmental standards, it's clear that the owners will want to steal a win from forest ownership, becoming suppliers of raw material for the pellet manufacturers.

All these are in quantities higher than the necessary for covering the country necessary and presently there are not used almost none. It's estimated that 1.000.000 m3 can replace approximately 180.000.000 liters of conventional fossil fuel.

The low carbon dioxide emission means that the environment isn't affected, a proof being is the non-inclusion between the polluting substances, by the and can be used for heating with help of the heating stations with automatic supplying.

The estimated consumption of pellets in Europe for the period 2000-2008 and the wood pellets price in the period 2002-2003 is presented in the chart/table below:

Estimated Consumtion

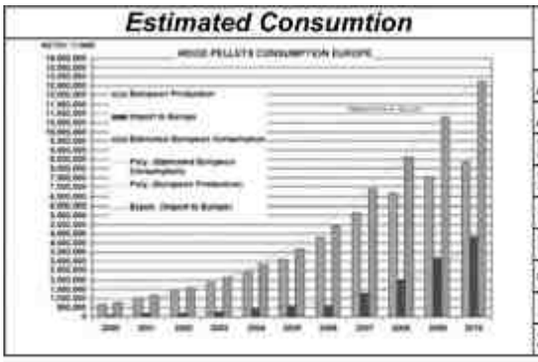

Country	*Pellet price, Euro/tone*	
	For small users	For industrial usage
Anglia	135-180	-
Austria	170	-
Belgia	260	155
Danemarca	200	133
Finlanda	135	98
Franta	219	121,9
Germania	170	-
Italia	215	91-182
Suedia	164,8	83,3

The export price of pellets is around 190-200 EURO/tone, and the production costs are approx. 30 EURO/tone. There haven't been reported cases of allergy provoked by pellet burning or storing

4. PELLETS MANUFACTURING TECHNOLOGY

Regulations contained in the UE environmental legislation regarding the nearly full recovery of the wooden waists impose a processing technology of these waists for an efficient recovery. This **technology** includes:

- at first o **manual sorting**, the unwanted materials are removed, for example: metal objects, stones, etc. (derived accidentally);
- an mechanical sifting operation, with the opportunity to select only the wooden waist with the optimum grain for the process of making pellets;
- a operation of **pelleting the wooden waists**;
- packing in plastic bags, cases, metal or wood containers etc., for an efficient manipulation, storage and transport. This operation bring to:

a) an efficient manipulation of the pellet bale in the waste storage area and beyond it's limits.;
b) possibility of storing the bales vertically. ;
c) efficient packed waste transportation to the consumers (a reduction of the mean of transportation of 5-25% for the same quantity of waists);
d) growing the pellet quality by avoiding the contact with different contaminants during transportation.

Technological flow for the pellet production consists in: mincing and storing the wet sawdust; drying and storing the dried sawdust; pressing the sawdust to achieve the pellet; weighting and packing pellets. Schematic the technological flow comprises the following main equipments: Mill with hammers; Pneumatic conveyor; Sawdust drying installation (stove-dryer); Conveyor with snail; Conditioning unit; Pellet pressing module; Pellet evacuation conveyor; Pellet elevator; Cooling Unit; Vibrating jigger; Conveyor with snail; Pellet elevator; Exhausting unit; Pellet weighting machine, Automat packing machine; Electrical installation.

Following this technological flow, for a complex fabrication line, we can see the following base components: the mincing and storing module; the sawdust drying-storing module; the pellet pressing module; the automat weighting and packing module.

To realize a minimum fabrication flow, in a project financed from the research funds, it will be executed the experimental design of the pellet pressing module, the conveyor with snail and the sawdust drying installation (stove-dryer).

The foreseen results after realizing these equipments will have the following minimum general technical characteristics:

a) **the experimental design of the pellet pressing module (fig.1).**
- the pressing mold diameter: 500mm;
- the operating engine power: ..... 15 kW;
- the pressing roll diameter: ..... 230 mm;
- weight: ..... cca. 1400 kg;
- pellet diameter: ..... min 6 mm;
- pellet length: ..... max. 45 mm;
- productivity: ..... cca. 200kg/ora;
- gauge: ..... cca.1400x900 x1700mm.

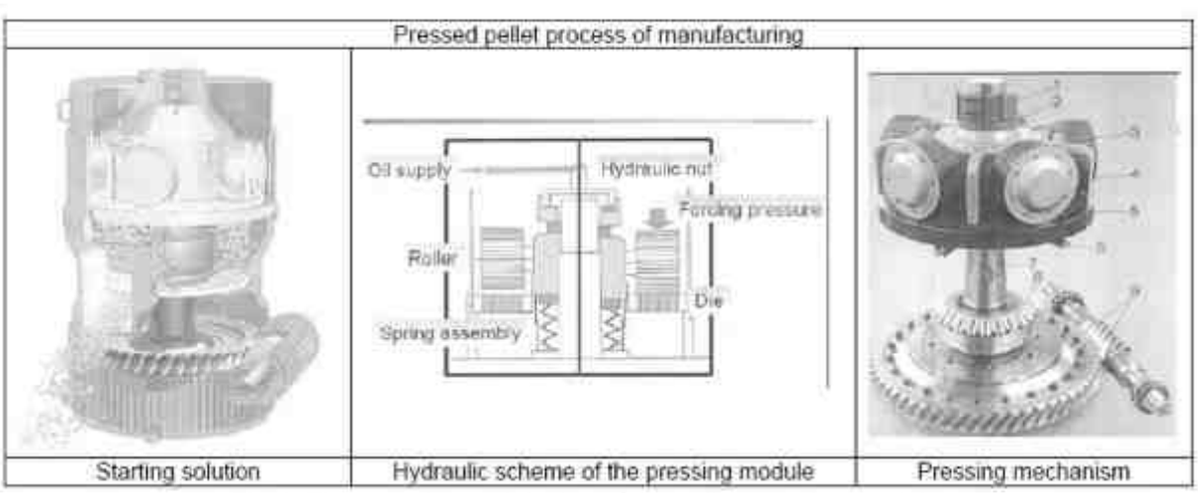

Fig.1. The experimental design of the pellet pressing module.

b) conveyor with snail.

- lenght: cca.2500mm;
- diameter: .....cca 150 mm;
- rotation speed ..... adjustable;
- operating engine power: .....0,37kW.

c) sawdust drying instalation.

- stove

- operating engine power:..... 0,37 kW;
- gauge: .....cca.2000x900x2100mm.

- dryer

- operating engine power: .....1,5 kW;
- fan power: 1,5 kW/3000rot/min;
- gauge: ..... cca.2400x750x1000mm.

5. CONCLUSIONS

By implementing technologies and equipments for achieving fuel products of high performance, as pellets, an important contribution to reduce the negative impact generated by the economically activity over the environment will be achieve.

6. BIBLIOGRAPHY

[1] Linii de fabricatie peleti. www.sebaenergy.ro;
[2] Linii de fabricatie peleti. www.ecopellets.ro;
[3] Linii de fabricatie peleti. www.akahl.de;
[4] Linii de fabricatie peleti. www.promeca.it;
[5] Contract PNCDI nr. 251 www.ictcm.ro/pncdi2007_2008/index.html.

ADVANCED ALGORITHM FOR OPTIMAL DIMENSIONING OF A SIEVING EQUIPMENT FOR WASTEWATER WITH CYLINDRICAL SCREEN

ALGORITM AVANSAT PENTRU DIMENSIONAREA OPTIMĂ A UNUI ECHIPAMENT DE SORTARE PENTRU APE UZATE CU ECRAN CILINDRIC

Victor-Viorel SAFTA (*), Erol MURAD (*), Georgeta HARAGA (*), Magdalena-Laura TOMA (*)

(*) Universitatea POLITEHNICA Bucuresti

Abstract

The sieving equipments are technological objects of the wastewater treatment plants which ensure the separation of the large suspended solids (branches, leaves, papers, plastic-textile-metallic materials, garbage) carried by the wastewater stream at the surface or inside of it. In the paper it is presented an advanced algorithm for the determination of the main parameters, dimensional, kinematics, dynamics and energetic of a sieving equipment with cylindrical screen.

Keywords: waste water treatment plant, large suspended solids, sieving equipment and dimensioning algorithm.

1. Introduction

To the entrance of the preliminary treatment in the wastewater treatment plants there are foreseen sieving equipments which remove from the wastewater the large suspended solids, such as branches, leaves, papers, plastic-textile-metallic materials, garbage which are carried by the wastewater stream, inside or at the surface. The modern sieving equipments for wastewater are complex units which firstly separate the large suspended solids from the wastewater, and then extract the water from the retained material, compact and evacuate them in closed containers. The most of the modern sieving equipments have an automatic working process which ensures a precise, safe and hygienic functioning.

In the paper it is presented an advanced algorithm for the determination of the main parameters, dimensional, kinematics, dynamics and energetic of a sieving equipment with cylindrical screen.

The algorithm is conceived for implementation in practice of the sieving equipments like ROTAMAT Rotary Drum Fine Screen Ro2 framed by Huber Edelstahl, Germany [2]. The sieving equipments ROTAMAT Ro2 are made in a typo dimensional series with 12 steps of the diameter of the cylindrical drum screen between 600 3000 mm. Every dimensional step may be provided with drum screens with the bar spacing between 0,5 6 mm. The typo dimensional series ROTAMAT Ro2 is designed to process a wide range of influent flows of wastewater between 25 2250 dm^3/s. In the figure 1 is presented the basic diagram of the sieving equipment ROTAMAT Ro2.

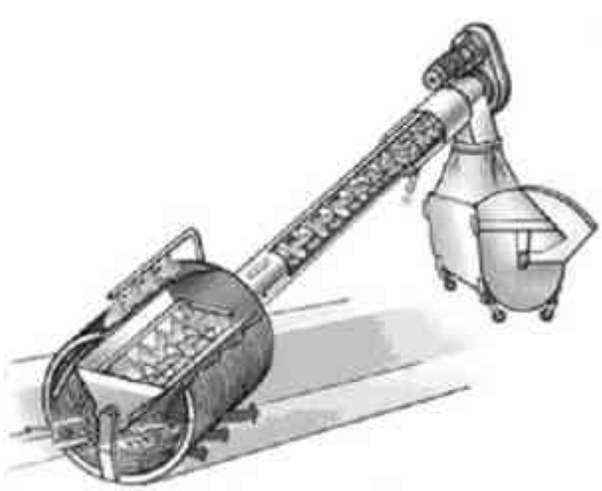

Fig. 1 Basic diagram of the sieving equipment ROTAMAT Ro2

2. Advanced Algorithm for Optimal Dimensioning of the Sieving Equipment with Cylindrical Drum Screen

In order to select the optimal dimensional step from the typo dimensional series ROTAMAT Ro2 for a certain value of the wastewater influent flow and for the determination of the dimensional, kinematics, dynamics and energetic parameters of the main ensembles of thewaste water sieving equipment in this situation, it was conceived an advanced algorithm [1]. The structural diagram of this algorithm is presented in figure 2.

Based on this algorithm it was accomplished an interactive program that allows a rapid and convenient the determination of the values of all the parameters of the sieving equipment.

Thus it can be analyzed easily different constructive alternatives of the sieving equipment in order to find the optimal alternative.

For the easy identification of the sieving equipment parameters, in table 1 is given their complete list, the symbols how they are encountered in the algorithm basic diagram and as the case stands their characteristic values.

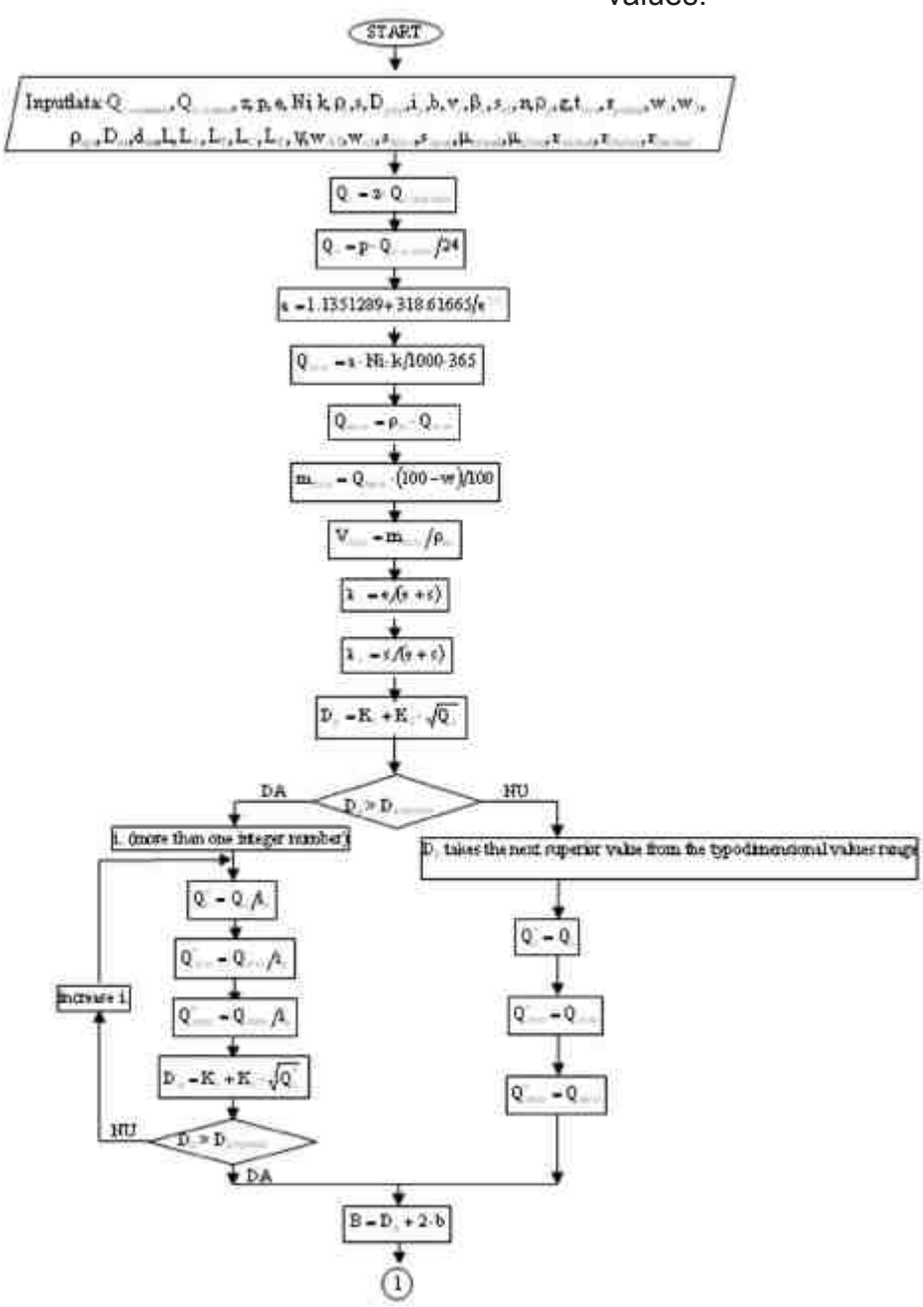

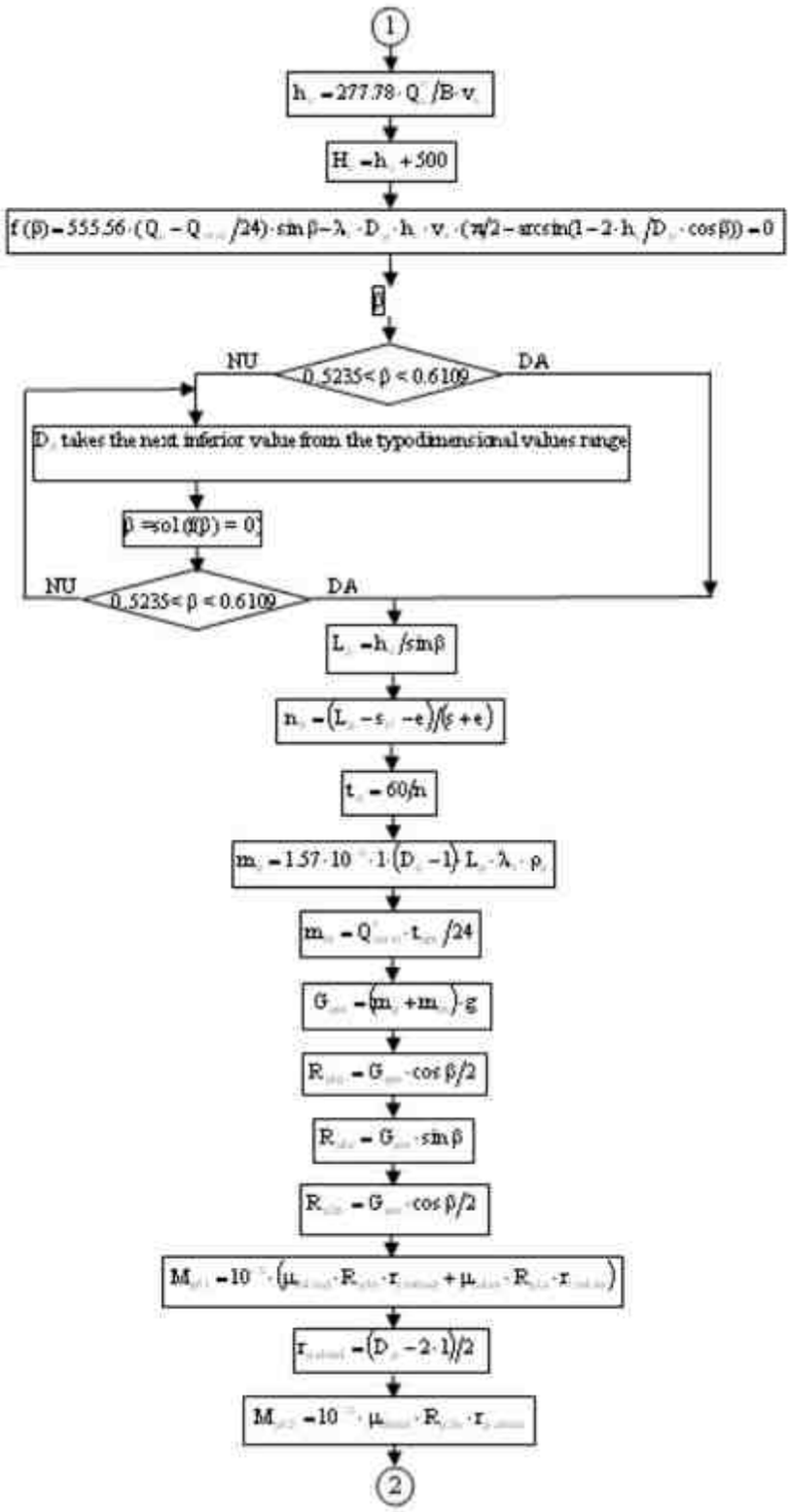
1
h = 277.78 · Q / B · v
H = h + 500
f(β) = 555.56 · (Q − Q/24) · sin β − λ · D · h · v · (π/2 − arcsin(1 − 2 · h / D · cos β)) = 0
NU
0.5235 < β < 0.6109
DA
D takes the next inferior value from the typodimensional values range
β = sol(f(β) = 0)
NU
0.5235 < β < 0.6109
DA
L = h / sin β
n = (L − s − e)/(s + e)
t = 60/n
m = 1.57 · 10 · 1 · (D − 1) L · λ · ρ
m = Q · t / 24
G = (m + m) · g
R = G · cos β/2
R = G · sin β
R = G · cos β/2
M = 10 · (μ · R · r + μ · R · r)
r = (D − 2 · 1)/2
M = 10 · μ · R · r
2

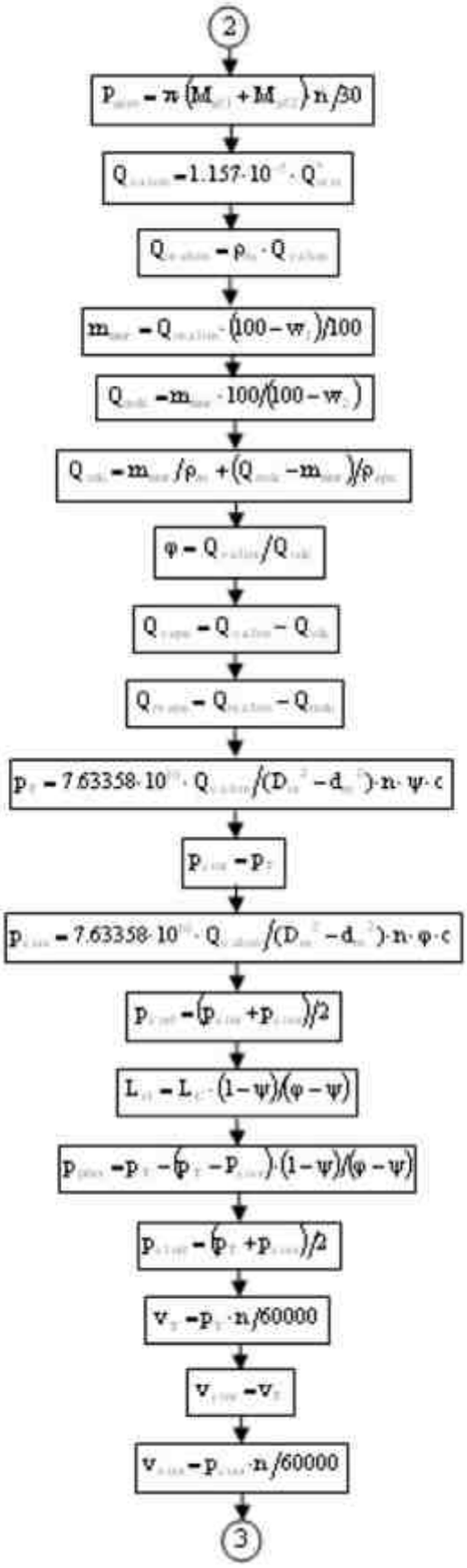
2
3

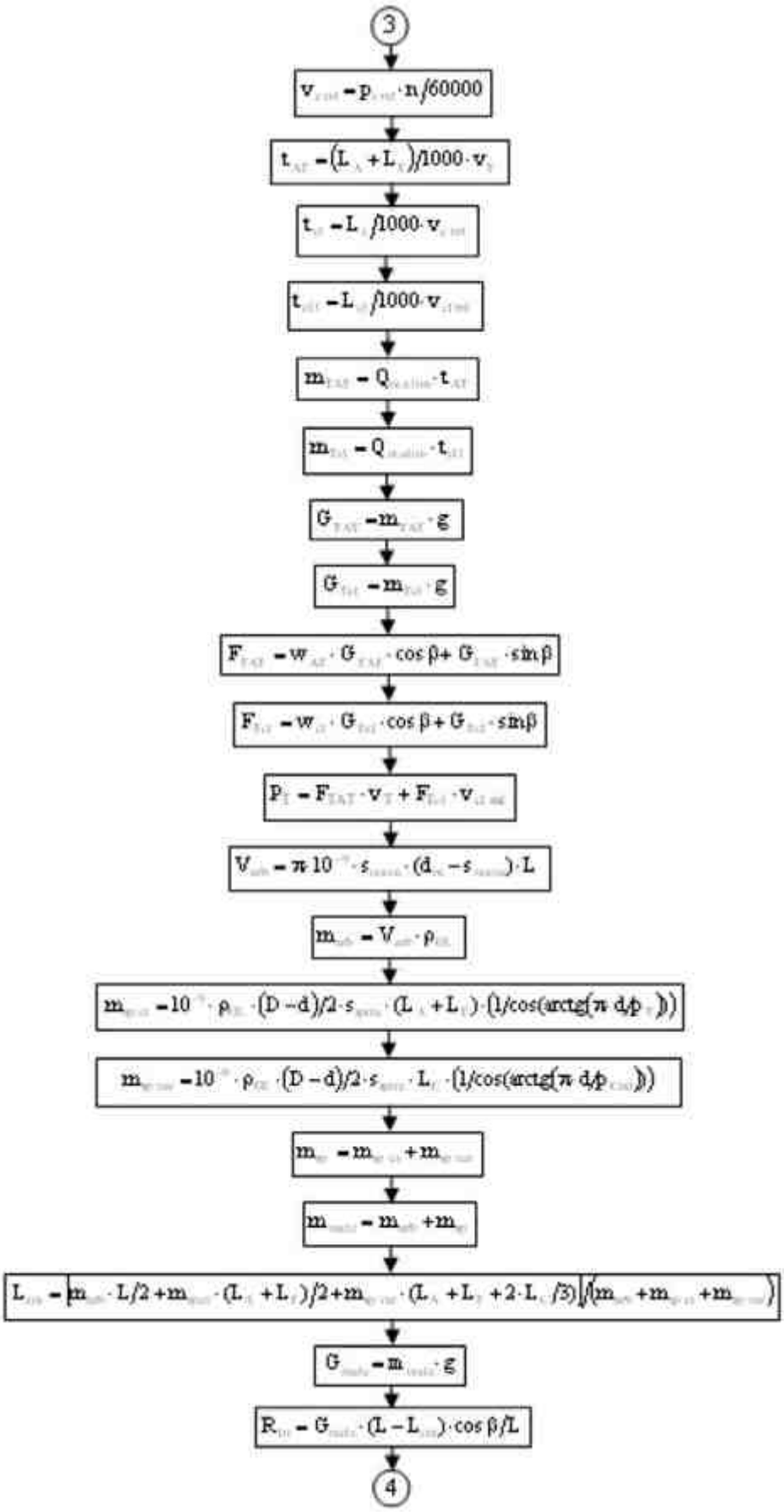
3
$v_{T\,int} = p_{T\,int} \cdot n/60000$
$t_{AT} = (L_A + L_T)/1000 \cdot v_T$
$t_{cl} = L_{cl}/1000 \cdot v_{cl\,int}$
$t_{cl\,T} = L_{cl\,T}/1000 \cdot v_{cl\,int}$
$m_{T\,AT} = Q_{T\,A\,int} \cdot t_{AT}$
$m_{T\,cl} = Q_{T\,cl\,int} \cdot t_{cl\,T}$
$G_{T\,AT} = m_{T\,AT} \cdot g$
$G_{T\,cl} = m_{T\,cl} \cdot g$
$F_{T\,AT} = w_{AT} \cdot G_{T\,AT} \cdot \cos\beta + G_{T\,AT} \cdot \sin\beta$
$F_{T\,cl} = w_{cl} \cdot G_{T\,cl} \cdot \cos\beta + G_{T\,cl} \cdot \sin\beta$
$P_T = F_{T\,AT} \cdot v_T + F_{T\,cl} \cdot v_{cl\,int}$
$V_{arb} = \pi \cdot 10^{-3} \cdot s_{arb\,int} \cdot (d_{ch} - s_{arb\,int}) \cdot L$
$m_{arb} = V_{arb} \cdot \rho_{cl}$
$m_{gr\,cl} = 10^{-3} \cdot \rho_{cl} \cdot (D - d)/2 \cdot s_{gr\,cl} \cdot (L_A + L_T) \cdot (1/\cos(\mathrm{arctg}(\pi \cdot d/p_{cl})))$
$m_{gr\,int} = 10^{-3} \cdot \rho_{cl} \cdot (D - d)/2 \cdot s_{gr\,int} \cdot L_{cl} \cdot (1/\cos(\mathrm{arctg}(\pi \cdot d/p_{cl\,int})))$
$m_{gr} = m_{gr\,cl} + m_{gr\,int}$
$m_{total} = m_{arb} + m_{gr}$
$L_{cg} = [m_{arb} \cdot L/2 + m_{gr\,cl} \cdot (L_A + L_T)/2 + m_{gr\,int} \cdot (L_A + L_T + 2 \cdot L_{cl}/3)]/(m_{arb} + m_{gr\,cl} + m_{gr\,int})$
$G_{total} = m_{total} \cdot g$
$R_{cl} = G_{total} \cdot (L - L_{cg}) \cdot \cos\beta/L$
4

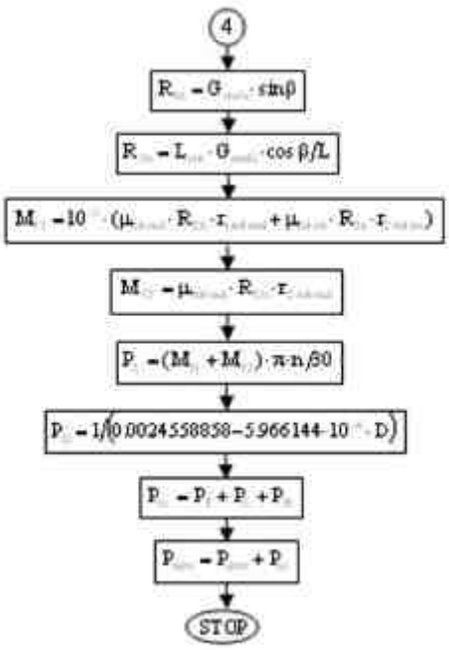

Fig. 2 The structural diagram of the algorithm

Table 1

Parameter	M.U.	Symbol	Characteristic values
Dimensioning waste water flow	m^3/h	Q_c	
Coefficient which considers the non-uniformity of the flow introduced in the waste water treatment plant		z	2 - 4
Maximum hourly waste water flow	m^3/h	$Q_{c\,orar\,max}$	
Verifying waste water flow	m^3/h	Q_v	
Coefficient that depends on the number of inhabitants of the populated centre		p	
Maximum daily waste water flow	m^3/day	$Q_{c\,zi\,max}$	
The distance between the screen bars	mm	e	6, 10
Specific quantity of captured suspended solids on the screen	l/inhab·year	a	
Daily on screen captured suspended solids volume flow	m^3/day	$Q_{rr\,zi}$	
The number of inhabitants of the populated centre		N	
Daily variation of the captured suspended solids flow		k	2 - 5
Daily captured suspended solids on screen weight flow	m^3/day	$Q_{rr\,zi}$	
Captured suspended solids density (with 80% humidity)	kg/m^3	ρ_r	750 - 950
Daily dry substance weight of captured suspended solids	kg/day	$m_{rr\,zi}$	
Humidity of the captured suspended solids on screen	%	w	80%
Daily dry substance volume of captured suspended solids	m^3/day	$V_{rr\,zi}$	
Captured suspended solids dry substance density	kg/m^3	ρ_{rs}	1600 - 2000
Screen bars section depth	mm	s	4 - 8
Screen bars section width	mm	l	20 - 40
Ratio between the waste water passing surface and total screen surface		λ	
Ratio between the bars surface and total screen surface		λ_s	
Cylindrical screen diameter	mm	D_g	
Coefficient for the cylindrical screen diameter calculus		K_1	45.150039 for e = 6 mm 126.43973 for e = 10 mm
Coefficient for the cylindrical screen diameter calculus		K_2	33.123859 for e = 6 mm 29.018932 for e = 10 mm
Typodimensional range of the mobile cylindrical screen diameter	mm	$D_{g\,tip}$	600, 780, 1000, 1200, 1400, 1600, 1800, 2000, 2200, 2400, 2700, 3000
Number of active cylindrical screen sieving equipment		i_g	more than one integer number
Dimensioning waste water flow for one active cylindrical screen sieving equipment	m^3/h	Q_c^*	
Daily on screen captured suspended solids volume flow for one active cylindrical screen sieving equipment	m^3/day	$Q_{rr\,zi}^*$	
Daily on screen captured suspended solids weight flow for one active cylindrical screen sieving equipment	kg/day	$Q_{mr\,zi}^*$	

Waste water canal width	mm	B	
Security space between the exterior surface of the cylindrical screen and vertical wall of the canal	mm	b	50 - 100
Height of the waste water current	mm	h_c	
Height of the canal	mm	H_c	
Waste water current average speed	m/s	v_c	0.7 - 0.9
Inclination angle of the screen	rad	β	0,5235 - 0,6109
Length of the cylindrical screen	mm	L_g	
Number of the screen bars		n_b	
Width of the frontal cylindrical frame of the screen		s_{rf}	15 - 30
Speed of the scrapper	rpm	n	3 - 15
Time period for one mobile cylindrical screen rotation	s	t_g	
Mobile cylindrical screen mass	kg	m_g	
Cylindrical screen material density	kg/ m³	ρ_g	7850
Cylindrical screen captured material mass	kg	m_m	
Period between two successive functioning of the scrapper	h	t_{spr}	0.1 - 0.5
Loaded cylindrical screen heaviness	N	G_{gm}	
Normal reaction from the prior bearing of the cylindrical screen	N	R_{g1n}	
Axial reaction from the prior bearing of the cylindrical screen	N	R_{g1a}	
Normal reaction from the hinder bearing of the cylindrical screen	N	R_{g2n}	
Moment of friction in the prior bearing of the cylindrical screen	Nm	M_{gf1}	
Friction coefficient in the prior bearing of the cylindrical screen on radial direction		$\mu_{rad\,rad}$	
Average prior bearing rolling radius on radial direction	mm	$r_{1\,rol\,rad}$	
Friction coefficient in the prior bearing of the cylindrical screen on axial direction		$\mu_{rol\,ax}$	
Average prior bearing rolling radius on axial direction	mm	$r_{1\,rol\,ax}$	
Moment of friction in the hinder bearing of the cylindrical screen	Nm	M_{gf2}	
Sliding friction coefficient in the hinder bearing of the cylindrical screen on radial direction		μ_{alrad}	
Hinder bearing sliding radius on radial direction	mm	$r_{g\,al\,rad}$	
Acting power of the cylindrical screen	W	$P_{g(t)}$	
Conveyor-press charging volume flow	m³/s	$Q_{v\,alim}$	
Conveyor-press charging weight flow	kg/s	$Q_{m\,alim}$	
Dry substance of the suspended solids charged in the conveyor-press specific mass	kg/s	m_{usa}	
Humidity of the suspended solids charged in the conveyor-press	%	w_1	80%
Dewatered and compacted conveyor-press material weight flow	kg/s	$Q_{m\,ut}$	
Humidity of the dewatered and compected suspended solids	%	w_2	60%
Dewatered and compacted conveyor-press material volume flow	m³/s	Q_{vut}	
Dewatered and compacted suspended solids density	kg/ m³	ρ_{sut}	1600 - 2000
Density of the water obtained from dewatering	kg/ m³	ρ_{apa}	1000
Volume variation coefficient during the compaction		φ	
Water volume flow obtained by dewatering and compaction	m³/s	$Q_{v\,apa}$	
Water weight flow obtained by dewatering and compaction	kg/s	$Q_{m\,apa}$	
Total length of the conveyor-press	mm	L	3500 - 6000
Length of the charging zone	mm	L_A	$L_A = L_E$
Length of the transport zone	mm	L_T	$L_T + L_A = (60 - 70\%)L$
Length of the compaction zone	mm	L_C	$(25 - 30\%)L$
Length of the discharging zone	mm	L_E	$L_E = D_m$
Exterior diameter of the helical conveyor	mm	D_m	
Interior diameter of the helical conveyor	mm	d_m	
Closed warm conveyor trough section filling coefficient		ψ	0.1 - 0.35
Helical conveyor inclination coefficient		c	
Auger of the helical conveyor at the entrance in the compaction zone	mm	$p_{C\,in}$	
Auger of the helical conveyor at the end of the compaction zone	mm	$p_{C\,fin}$	
Average auger of the helical conveyor at the end of the compaction zone in case of linear variation of the auger in the compaction zone	mm	$p_{C\,mf}$	
Length till the material fill the hole section of the closed warm conveyor trough in the compaction zone	mm	L_{C1}	
Auger of the helical conveyor corresponding to the Length till the material fill the hole section	mm	p_{pres}	
Average auger in case of linear variation of the auger in the compaction zone	mm	$p_{C1\,mf}$	
Material speed in the transportation zone of the helical conveyor	m/s	v_T	
Material speed at the entrance of the compaction zone	m/s	$v_{C\,in}$	
Material speed at the end of the compaction zone	m/s	$v_{C\,fin}$	
Average speed of the material in the compaction zone in case of linear variation of the auger	m/s	$v_{C\,mf}$	
Period of time in which the material crosses the charging and transport zones	s	t_{AT}	
Period of time in which the material crosses the compaction zone in case of linear variation of the auger	s	t_{C1}	
Period of time in which the material crosses the zone defined by the length L_{C1} in case of linear variation of the auger	s	t_{C1}	
Maximum material mass transported in the charging and transport zones	kg	m_{TAT}	
Maximum material mass transported in the zone defined by the length L_{C1} in case of linear variation of the auger	kg	m_{TC1}	
Maximum material heaviness transported in the charging and transport zones	N	G_{TAT}	

Maximum material heaviness transported in the zone defined by the length L_{C1} in case of linear variation of the auger	N	G_{TC1}	
Resistance force at the material transport in the charging and transport zones	N	F_{TA1}	
Resistance force at the material transport in the zone defined by the length L_{C1} in case of linear variation of the auger	N	F_{T12}	
Necessary power for the material transport by the helical conveyor	W	P_T	
Helical conveyor mass	kg	m_{helic}	
Helical conveyor shaft mass	kg	m_{arb}	
Helical conveyor shaft volume	m^3	V_{arb}	
Pipe width of the helical conveyor shaft	mm	$s_{tuv(t)}$	
Mass of the helical conveyor fillet	kg	m_{ap}	
Mass of the helical conveyor fillet in the constant auger zone	kg	$m_{ap\,cst}$	
Mass of the helical conveyor fillet in the variable auger zone	kg	$m_{ap\,var}$	
Distance between the mass centre of the helical conveyor and its prior end	mm	L_{cm}	
Helical conveyor heaviness	N	G_{helic}	
Normal reaction from the prior bearing of the helical conveyor	N	R_{1n}	
Axial reaction from the prior bearing of the helical conveyor	N	R_{1a}	
Normal reaction from the hinder bearing of the helical conveyor	N	R_{2n}	
Moment of friction in the prior bearing of the helical conveyor	Nm	M_{f1}	
Friction coefficient in the prior bearing of the helical conveyor on radial direction		$\mu_{rul\,rad}$	
Average prior bearing rolling radius on radial direction	mm	$r_{1\,rul\,rad}$	
Friction coefficient in the prior bearing of the helical conveyor on axial direction		$\mu_{rul\,ax}$	
Average prior bearing rolling radius on axial direction	mm	$r_{1\,rul\,ax}$	
Moment of friction in the hinder bearing of the helical conveyor	Nm	M_{f2}	
Average hinder bearing rolling radius on radial direction	mm	$r_{2\,rul\,rad}$	
Necessary power for defeating the friction resistance forces in the bearings	W	P_L	
Necessary power for dewatering and compaction of the material	W	P_D	
Necessary power for acting the conveyor-press	W	P_{tr}	
Necessary power for acting the mobile cylindrical screen sieving equipment	W	P_{sim}	

Conclusions

The waste water sieving equipments with cylindrical screen are modern equipment with an automatic working process which assures a safe, precise and hygienic exploitation and which requires only circumstantial supervision and maintenance assistance when it is necessary.

In the paper it is presented an advanced algorithm for the determination of the main parameters, dimensional, kinematics, dynamics and energetic of a sieving equipment with cylindrical screen that constitutes a very useful instrument for the designers in this sphere.

Based on the presented calculus algorithm, it was realized an interactive program which allows a very fast and comfortable determination of the main parameters values needed at the sieving equipment designing. Due to the simplicity and rapidity of the program utilization, it can be analyzed a multitude of constructive alternatives in order to find the optimal alternative.

References

1. Safta V.V., Toma Magdalena-Laura *Elemente de proiectare a echipamentelor şi instalațiilor din treapta mecanică a stațiilor de epurare a apelor uzate*, Editura Printech, Bucureº ti, 2003.
2. *** *ROTAMAT Rotary Drum Fine Screen Ro2* Brochure of HUBER-EDELSTHL (Germany)

HEAVY METAL POLLUTION IN THE UPPER SOMES RIVER, ROMANIA

Cecilia Roman, Mirela Miclean, Erika Levei, Marin Senila, Claudiu Tanaselia
Research Institute for Analytical Instrumentation, 67 Donath, 400293 Cluj-Napoca, Romania
Tel: +40-264-420590, Fax: +40-264-420667, E-mail: icia@icia.ro

ABSTRACT
The mining and the metal processing activities from the North-Western Romania seriously affect the water quality of the Somes hydrographical basin with transboundary consequences. This paper presents the heavy metals (Cu, Cd, Pb, Zn) concentration in the water and tailing samples collected along the Somes river and from sedimentation ponds, in North-Western Romania. The concentrations of cadmium, copper, lead, zinc in water samples were analyzed using inductively coupled plasma-mass spectrometry, after appropriate sample treatment. The obtained results showed that heavy metals concentration were higher than the maximum admissible concentrations imposed by Romanian legislation, therefore a continuous monitoring along with the application of bioremediation technologies in the area is mandatory.

Key words: *heavy metals, pollution, water, tailing, Somes*

1. INTRODUCTION

Mining activities generate significant amounts of waste [2]. In the upper part of Somes hydrographical basin, the high amounts of tailings generated during centuries of mining have been poorly managed. Mine wastewater and tailings are known to have significant environmental effects due the high acid generating potential and release of important heavy metals concentration. The erosion of waste dumps and tailing deposits and their accidental failure in extreme meteorological conditions can generate local or regional scale pollution [3, 6]. The mobilization of heavy metals present in tailing dams is increased by acid mine drainage, a chemical phenomenon due to the sulphur oxidation of metal-sulphide minerals by atmospheric oxygen, generating a powerful leaching agent causing the secondary release of heavy metals present in tailings [5].

The objective of the study was to assess the heavy metal contamination from mining activities in the upper part of Somes hydrographical basin, NW Romania.

2. MATERIALS AND METHODS

2.1 Description of the sampling areas

During the sampling campaign in summer 2007, we have collected water and tailing samples from sedimentation ponds (active or closed) and tailing dams (some of them, totally unorganized and improperly managed).

Three sampling sites were selected in the upper part of Somes hydrographical basin, North-Western Romania, every of them situated near old mining activities districts: 1. Anies tailing dam (8 tailing samples), 2. Valea Mare tailing dam (6 tailing samples), 3. Glodului Valley tailing dam (9 tailing samples).

The sampling site is presented in Figure 1.

2.2 Sample collection

Samples of tailing (an approximate amount of 5 kg) were collected from the superficial horizon (20 cm) of the dams.

The collected tailing samples were thoroughly mixed; air dried in a clear room to avoid contamination and then divided into representative sub-samples, grounded to pass through 2 mm and then 250 m sieve, performed by an automatic sieve shaker, Retsch PM100, Germany.

Water samples for metal analysis were filtered using 0.45 µm pore-diameter cellulose nitrate membrane and acidified to pH=2 with ultrapure grade 65 % nitric acid and stored at 4 °C. The samples for anion analysis were also filtered (0.45 µm) and stored at 4 °C until analysis.

The analysis of water pH was carried out in the field, with a portable WTW MultiLine P4 Universal Pocket Meter (WTW Germany).

All labware were previously washed in diluted nitric acid and rinsed with ultrapure water (Millipore from a Direct Q UV 3 Millipore system) to prevent contamination and were sealed individually in polyethylene bags to avoid contamination during field sampling campaign.

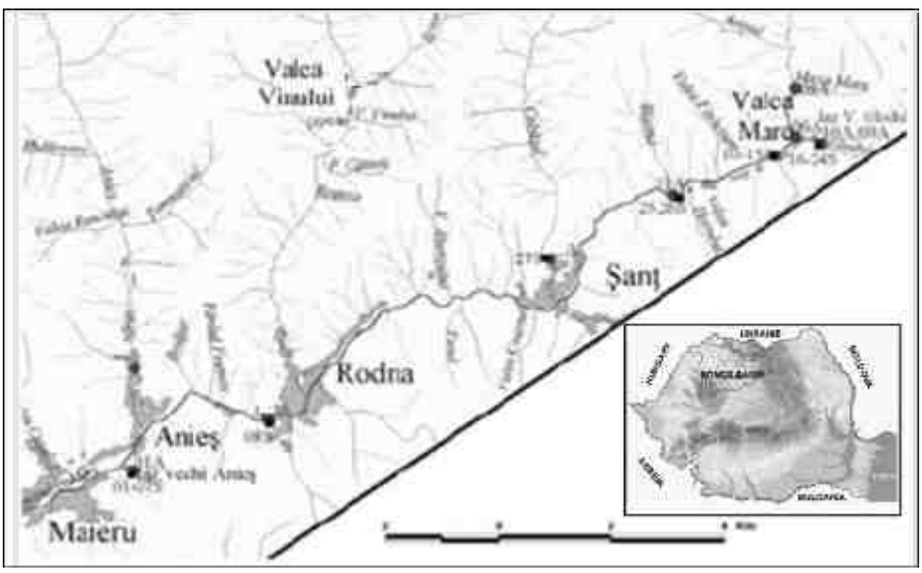

Figure 1. Sampling site

2.3 Chemical analysis

2.3.1 Determination of pH in tailing samples

The pH was measured in a 1:2.5 (m/v) tailing to water ratio using a Jenway 3340 ion meter (USA).

2.3.2 Determination of heavy metals content

The heavy metal contents in tailings were determined after *aqua regia* digestion [4]. *Aqua regia* generally dissolves all metals in the residue except those in silicates, the percentage extracted varying between 60 and 100%, depending on the metal [1]. An amount of 1 g sample (250 m) was weighted, introduced into the reaction flask and maintained at room temperature for 16 h with 21 ml of 12 M HCl and 7 ml of 15.8 M HNO_3. The mixture was then heated under reflux conditions for 2 h. The solution was filtered and diluted to 100 ml with 0.5 M HNO_3.

In order to determine the metals contents, the water samples were digested on a sand bath, by adding 5 ml of 65 % HNO_3 at 100 ml sample. After cooling, the solution was filtered and diluted to 100 ml with ultrapure water.

The concentrations of Pb, Cu, Cd, Zn were determined by Inductively Coupled Plasma Mass Spectrometry, ELAN DRC II, Perkin Elmer, USA, with external standard method.

All relevant ICP-MS spectrometer operating parameters (power level, gas flows, sample uptake rate and positioning of the plasma torch in the front of the optical interface) are controlled by the software. Thus, optimum operating conditions can be easily selected. The detection limits for metals determination in ICP-MS following the *aqua regia* extraction were 0.005 mg/kg for Cu, 0.04 for Pb, 0.01 for Zn, 0.005 for Cd.

2.3.3 Determination of anions

Anions (F^-, Cl^-, NO_3^- and SO_4^{2-}) were determined using a Compact IC Metrohm ion chromatograph, with a conductivity detector, with a Metrosep Supp 5 column for the separation of major anions. The injection volume was 20 l, and the flow rate was 6.0 ml/min. The obtained detection limits were 0.03, 0.08, 0.09, and 0.05 mg/l for F^-, Cl^-, NO_3^- and SO_4^{2-}, respectively.

3. RESULTS AND DISCUSSION

The metals concentrations from tailings are shown in Table 1 and from the wastewaters in Figure 2.

Metal concentrations in water from sedimentation ponds are assessed against those in Romanian Order no. 352/2005, (Ministry of waters, forests and environment protection), required for industrial and urban wastewaters discharged in natural receivers, as comparison.

The obtained results for waters showed that mean concentrations of Pb were 63.8, 14.7 and 24.3 times higher than the reference value, respectively, for the three studied sites. The mean Cu concentrations were 62.7, 261.2 and 61.2 times higher than reference value for every site. The average values for Zn were: 910, 472 and 306 mg/l, respectively, and for Cd: 13.4, 3.1 and 2.4 mg/l, respectively.

Metal	Range	Mean	SD
	mg/kg	mg/kg	mg/kg
Site 1. Anies tailing dam (n=8)			
Cu	<0.02-302	167.0	90.43
Pb	586-3809	1400	1029
Zn	72-715	2753	2051
Cd	5.35-24.6	14.85	6.67
Site 2. Valea Mare tailing dam (n=6)			
Cu	25-52	35.83	10.34
Pb	810-5186	2009	1624
Zn	2070-13582	5839	4350
Cd	4.82-45.43	19.67	14.96
Site 3. Glodului Valley tailing dam (n=9)			
Cu	<0.02-219	99.39	99.08
Pb	336-1749	787	467
Zn	1916-32405	11769	11434
Cd	2.22-235	54.09	75.39

SEM – standard error of mean; n – number of tailing samples

TABLE 1. Heavy metals concentrations from tailing samples

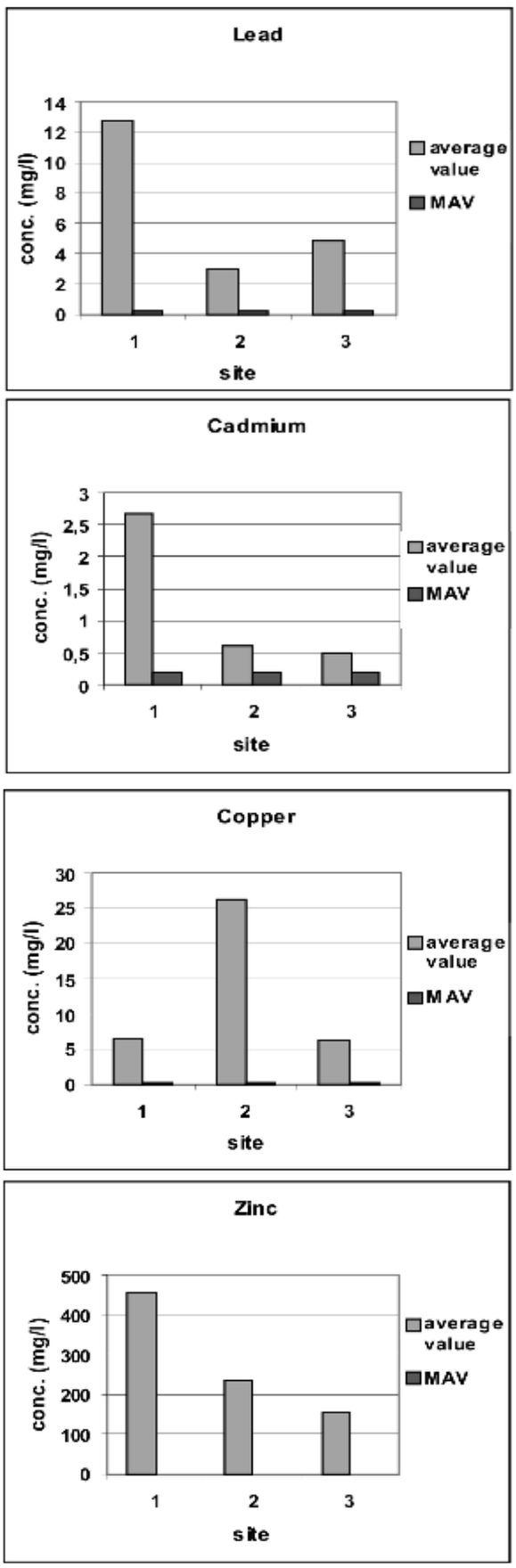

Figure 2. The mean metal concentrations in wastewaters (MAV-maximum admissible value)

In Table 2 are shown the obtained mean concentrations for fluorides, chlorides, nitrates and sulfates. A large variation in the concentrations of major anions was observed.

The lowest levels were observed for fluorides and the highest for sulfates. The concentrations of sulfates were exceeding the maximum admissible values for 7, 6.4 and 2.1 times, for the studies sites, respectively.

	F^- (mg/l)	Cl^- (mg/l)	NO_3^- (mg/l)	SO_4^{2-} (mg/l)
MAV	5.0	500	25.0	600
Site 1	0.56	6.58	2.08	4193
Site 2	0.14	40.5	1.24	3850
Site 3	0.37	12.98	1.05	1280

MAV = maximum admissible value, according to Romanian Order no. 352/2005

The pH values varied between 2.8 and 7.5, with a mean value of 4.96 and the standard error of mean of 1.72. The low pH values may increase the solubility and mobility of metals, raising the risk of metal contamination in the nearest water courses, groundwater and agricultural fields.

4. CONCLUSIONS

Mines and tailing impoundments, in each phase from prospecting to exploitation, or even in closing or conservation stage, have a negative environmental potential, affecting the waters, soils, vegetation, fauna, causing even landscape modification. Even closed, some mines and tailing deposits from the area represent a continuous pollution source of the environment.

The great number of tailing impoundments and decantation ponds in Somes area determines the pollution of surface waters with heavy metals. Technological accidents at these sites could have a violent impact on the whole hydrographic basin, with transboundary consequences.

REFERENCES

[1] Burt, R., Wilson, M.A., Keck, T.J., Dougherty, B.D., Strom, D.E. and J. A. Lindahl (2003) "Trace element speciation in selected smelter-contaminated soils in Anaconda and Deer Lodge Valley, Montana, USA", *Advances in Environmental Research*, 8, 51-67.

[2] Conesa, H.M., Faz A. and R. Arnaldos (2007) "Initial studies for the phytostabilization of a mine tailing from the Cartagena-La Union Mining District (SE Spain)", *Chemosphere*, 66, 38-44.

[3] Dudka, S. and D. C. Adriano (1997) "Environmental impacts of metal ore mining and processing: a review", *Journal of Environmental Quality*, 26, 590-602.

[4] Ilwon Ko, Ahn, J.S., Park, Y.S. K. W. Kim (2003) "Arsenic contamination of soils and sediments from tailings in the vicinity of Myungbong Au mine, Korea", *Chemical Speciation and Bioavailability*, 15, 67-74.

[5] Pagnanelli, F., Moscardini, E., Giuliano, V. and L. Toro (2004) "Sequential extraction of heavy metals in river sediments of an abandoned pyrite mining area: pollution detection and affinity series", *Environmental Pollution*, 132, 189-201.

[6] Salomons, W. (1995) "Environmental impact of metals derived from mining activities: processes, predictions, preventions", *Journal of Geochemical Exploration*, 52, 5-23.

NOUĂ TEHNOLOGIE DE MECANIZARE PENTRU DECOMPACTAREA ŞI AERAREA ÎN PROFUNZIME A SOLURILOR DEFICITARE, CONCOMITENT CU ADMINISTRAREA DE ELEMENTE NUTRITIVE

NEW TECHNOLOGY FOR MELLOWING, NOURISHING AND DEEP AIRING OF SOILS

Prof. on. dr. ing. Iosif COJOCARU*, Dr. ing. Nicolae CONSTANTIN*, Prof. dr. ing. Ion PIRNA*, Dr. ing Eugen MARIN* Dr.ing. Alexandru COCIU**

** INMA*
***INCDA Fundulea*

Abstract: *The new mechanisation soil work technolgy concentrates on mellowing and deep airing of scarce soils and also nourishing them with nutrients. This may be applied on about 19.8% from the overall cultivated land from Romania. Its application at high quality standards, low energy consumption and low costs has imposed a new technical equipment with high quality constructive and operational parameters, purposefully created for wheeled tractors of 180-240 HP equipped with 5 active bodies, reversible knive and chisel type and 2 clod crushers with claws on which is mounted an equipment for administering non soluble nutrients. The new equipment named DECOM FERTI reaches working depths of max.40 cm at soil levelling and of 60 cm max. At soil work from arable substratum, the work width being of about 2.5 m and the operational capacity of 1.56 ha-h. It administers nutrients with levels ranging from 50 to 250 kg/ha.*

Key words: technical equipment, soil mellowing and airing, administer nutrients

1. CONSIDERAŢII GENERALE

România se confruntă cu un grad de deteriorare a calitatii solului prin fenomene de eroziune, acidificare, alcalinizare, exces de umiditate sau seceta, saraturare, compactare etc. Principalul proces de degradare a solului, prin extensie şi impact socio-economic îl reprezintă *eroziunea prin apă*, care împreună cu alunecările de teren cuprind peste 7 mil. ha teren agricol. Al doilea factor ca importanţă în degradarea solului este *excesul periodic de umiditate* care afectează 3,8 milioane ha teren agricol şi 0,6 milioane terenuri forestiere, iar *excesul de seceta* frecventă se manifestă pe aprox. 7,1 milioane ha de teren agricol şi 0,2 milioane ha teren silvic. Un rol important în degradarea fizică a solului îl ocupă *compactarea* antropică a solului şi formarea crustei. Compactarea este întâlnită pe cca. 1,3 mil. ha arabil şi se datorează în principal greutăţii şi sau folosirii prea frecvente a utilajelor agricole, cu deosebire în condiţii de umiditate nepotrivită a solului, fie pe soluri prea uscate, fie pe soluri prea umede.

Noua tehnologie de mecanizare a lucrării solului în substratul arabil este specifică solurilor grele si tasate, afectate alternativ de exces si deficit de umiditate precum si altor categorii de soluri care prezinta limitari ale capacitatii de productie determinate de salinizare, alcalinizare, poluare etc. Aplicarea ei la un nivel calitativ corespunzător cerinţelor agropedologice, la un preţ de cost cât mai scăzut şi cu un consum redus de energie impune asigurarea unor utilaje cu parametri constructivi şi funcţionali superiori.

2.1. Destinaţia şi domeniul de utilizare

Echipamentul tehnic DECOM-FERTI (figura 1), este de tipul purtat pe ridicătoarele hidraulice ale tractoarelor de 180-240 CP pe roţi, categoria a III-a, SR ISO 730-1+C1:2000 şi este destinat a executa decompactarea şi aerarea în profunzime a solurilor deficitare, concomitent cu administrarea de elemente nutritive şi eliminarea stratului impermeabil de sol (hardpanul) dintre stratul şi substratul arabil. Se utilizează toamna pe soluri degradate aflate pe terenuri plane sau cu pantă până la 6°.

Fig. 1. Echipamentul tehnic **DECOM-FERTI**

2.2. Descrierea constructivă şi funcţională

Echipamentul tehnic *DECOM-FERTI* se compune din urmãtoarele ansambluri principale: ºasiu; organe active cu cuþite daltã reversibilã ºi cuþite speciale pentru eliminarea hardpanului; tãvãlugi cu gheare; roatã de reglare a adâncimii de lucru ; echipament de administrat elemente nutritive greu solubile.

Şasiul asigurã prinderea echipamentului în trei puncte la tiranþi ridictorului hidraulic ai tractorului ºi amplasarea celor 5 **organe active** (formate fiecare dintr-un suport de bazã pe care se montează cuþitul tip daltã reversibilã, cuþitul vertical ºi douã cuþite tip «L») de afânare adâncã a solului din substratul arabil.

Tăvălugii cu gheare asigura mărunţirea ºi o uºoarã nivelare a solului prelucrat de cãtre organele active, fiind amplasaþi în spatele acestora. Ei se prind de ºasiu prin intermediu unor pereþi laterali ºi a unui paralelogram deformabil putându-se regla pe verticalã la diferite distanţe faţã de organele active.

Roata de reglare a adâncimii de lucru asigurã reglarea şi limitarea adâncimii de lucru a organelor active de lucru.

Echipamentul de administrat elemente nutritive se compune din urmãtoarele ansambluri principale: lada cu sistemul de administrare a elementelor nutritive; tuburi de administrat elementele nutritive; instalaþia hidraulica; reductor; platforma ; scara.

Reglaje

- reglarea paralelismului cadrului cu suprafaţa solului în plan transversal se face prin aducerea la aceeai lungime a braelor verticale, reglabile, de susinere a celor doi tirani laterali ai ridicãtorului hidraulic al tractorului;
- reglarea paralelismului cadrului cu suprafaţa terenului în plan longitudinal se face prin lungirea sau scurtarea tirantului central al ridicătorului hidraulic al tractorului;
- reglarea adâncimii de lucru se face prin fixarea suportului roţi metalice într-o poziţie corespunztoare adâncimii de lucru dorite corelatã cu poziţia tãvãlugilor cu gheare;
- reglarea normelor de administrare a elementelor nutritive se efectueze continuu, cu un reductor ºi un hidromotor.

3. CARACTERISTICI CONSTRUCTIVE SI FUNCTIONALE

3.1. Caracteristici constructive

- Tipul	tractat
- Tractor necesar, CP	180-240
- Latimea de lucru, m	2,5
- Nr.organe de afanare	5
- Distanta ntre organele de afanare, mm	510
- Tipul organelor de afânare :	- cutit dalta reversibila
	- « L » stg.- dreapta
	- cutit vertical
- Nr. tavalugilor de nivelare-maruntire	2
- Diametrul tavalugilor nivelare-maruntire, mm	500
- Capacitatea lãzii de îngrãºãminte, dm^3	300

- Elemente nutritive administrate : îngrãºãminte chimice solide, superfosfat, complexe, azotat de amoniu, uree, nitrocalcar etc.

- Dimensiuni de gabarit, mm
- Lungime 1765
- Latime 2400
- Inalţime
  - în lucru 1865
  - în transport 2165

3.2. Caracteristici funcţionale

- Adâncimea de lucru, cm:
  - -afanare adanca max 60
  - -cizelat max 40
- Viteza în transport, km/h 4 - 8
- Normele de administrare a elementelor nutritive, kg/ha 50÷250
- Normele de administrare a fosforului º i potasiu, kg/ha 70÷120

4. ÎNCERCĂRI ÎN CONDITII DE CÂMP-LABORATOR SI DE EXPLOATARE

Încercrile de casã º i în condiţii de câmp-laborator ale echipamentului tehnic **DECOM-FERTI** s-au efectuat în cadrul Sediului SC MAT SA Craiova º i pe terenurile agricole ale Societãţii Agricole CRINA Bãrcãneº ti, Jud. Olt în agregat cu tractorul ZIMBRU de 195 CP din fabricaţia SC MAT SA Craiova. In figura 2 este prezentat Echipamentul tehnic **DECOM-FERTI** (stânga) Echipamentul tehnic **DECOM** (dreapta) în agregat cu tractorul ZIMBRU.

Fig. 2. Echipamentul tehnic **DECOM-FERTI** º i Echipamentul tehnic **DECOM** in agregat cu tractorul ZIMBRU

Determinarea gradului de afânare a solului

Principalul indicator calitativ de lucru, la lucrarea solului în substratul arabil îl reprezintã **gradului de afânare a solului.** Gradul de afânare a solului s-a determinat prin mãsurarea coordonatelor diferitelor puncte faţã de un sistem de referinţã (fig. 3), constând într-o riglã aº ezatã deasupra câmpului pe doi ţãruº i. Rigla a fost aº ezatã orizontal cu ajutorul unei nivele cu bulã de aer º i a fost orientatã perpendicular pe direcţia de înaintare a maº inii.

S-au fãcut mãsurãtori ale distanţelor dintre riglã º i câmp, la distanţe din 10 în 10 cm. S-au executat 2 profiluri pentru fiecare repetiţie.

Gradul de afânare a solului s-a calculat în %, cu relaţia:

$$G_{as=} \frac{\sum_{i=1}^{i=n} \frac{h_1 - h_2}{h_1}}{n} .100$$

Fig. 3. Aspect din timpul determinării ordonatei h_1

în care:

h_1 =dimensiunea măsurată într-un anumit punct de la riglă la suprafața solului, înainte de trecerea mașinii;

h_2 = dimensiunea măsurată în același punct de la riglă la suprafața solului după trecerea mașinii;

n = numărul de măsurători efectuate.

La încercările din perioada august- septembrie 2009, echipamentul tehnic DECOM-FERTI a realizat lucrări de calitate, cu indici calitativi de lucru și energetici corespunzători, în limitele prevăzute de cerințele agrotehnice -indici prezentați în diagrama din figura 4:

Fig. 4. Variația indicilor de lucru ai echipamentului tehnic DECOM-FERTI

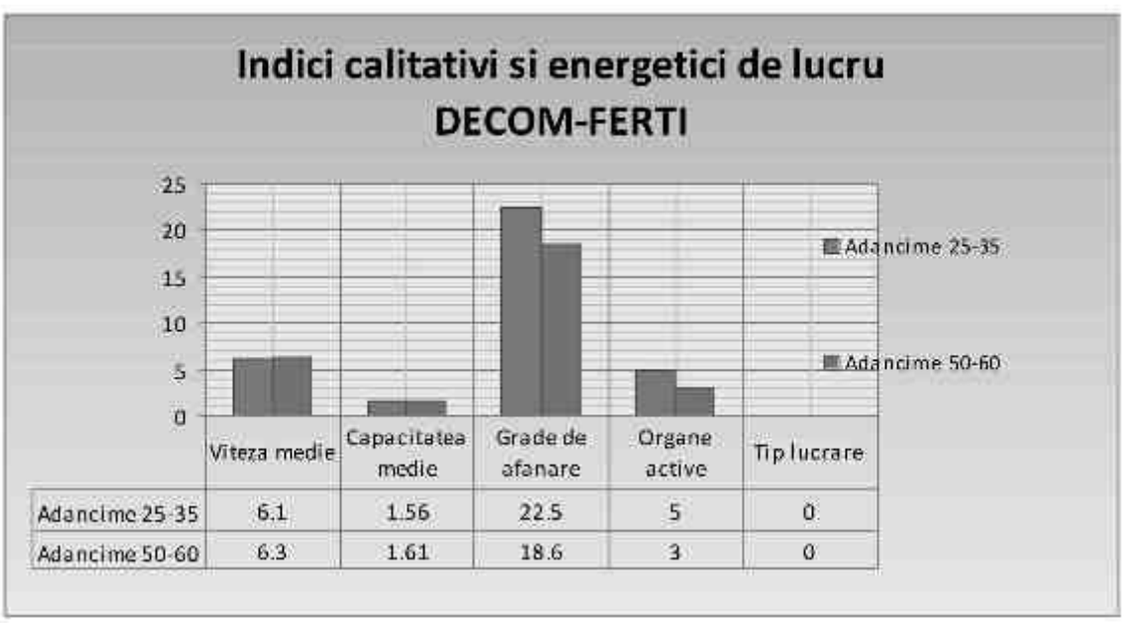

Echipamentul a avut o bun stabilitate în plan orizontal si vertical.
Principalii indici calitativi de lucru și energetici realizați sunt:

- **gradul de afânare**, % — G_{as}=19,4÷22,5% la 25÷30 cm; G_{as}=15,3÷18,6% la 50÷60 cm
- **adâncimea de lucru**, cm — 50-60 *la scarificarea solului*; 25-35 *la subsolajul solului*
- **viteza de lucru medie**, km/h — 6,3 *la scarificarea solului cu trei organe active*; 6,1 *la subsolajul solului cu cinci organe active*
- **capacitatea de lucru medie**, ha/h: — 1,61 *la scarificarea solului cu trei organe active*; 1,56 *la subsolajul solului cu cinci organe active*
- **consumul de combustibil mediu**, l/ha — 23,00 la scarificarea solului cu trei organe active; 22,50 la subsolajul solului cu cinci organe active
- **normă de administrare** elemente nutritive, kg/ha 50÷250

5. CONCLUZII

În urma încercrilor au rezultat urmtoarele avantaje ale folosirii *Echipamentului tehnic* **DECOM-FERTI***, destinat tractoarelor de 180 - 240 CP*:

- poate lucra în toate tipurile de sol, la umiditatea optimã sau redusã a solului la care se obține un grad maxim de afânare a acestuia
- poate executa *lucrarea solului* (scarificarea în orizontul B_1) *în substratul arabil* echipat cu trei organe active de lucru și distanțate între ele la 100 cm și *subsolajul solului (*afânarea în orizontul A_2) echipat cu cinci organe active de lucru și distanțate între ele la 51 cm
- administrează elemente nutritive între norma minima de 50kg/ha și norma maxima de 250 kg/ha
- pãtrunde ușor în sol, pânã la adâncimea maximã, spațiul parcurs de agregat în acest timp este de cca. 0,50 m
-are o bunã stabilitate în poziția de lucru, atât în plan vertical, cât și în plan orizontal, pentru întreaga gamã de adâncimi de lucru realizate
- asigurã o bunã afânare a solului, fãrã întoarcerea, inversarea sau amestecarea orizonturilor de sol.

6. BIBLIOGRAFIE

1. Cojocaru Iosif, şi col -.Studii și cercetãri privind tehnologia de lucrare a solului fãrã rãsturnarea brazdei și metodologia de experimentare a unui Cizel la înființarea culturilor de cereale pãioase - Simpozion organizat de ASAS în colaborare cu AOSR, 1999;

2. Cojocaru Iosif, şi col - Tehnologie ecologicã de subsolaj și lucrarea solului în sistem conservativ și realizarea unui echipament tehnic de mare productivitate - lucrãrile Sesiunii științifice INMATEH 2004-II, București, 2004

3. Kolozsvari Constantina, Constantin N. - *Echipament pentru afânarea adâncă a solului, MAS 220.* Revista "Mecanizarea Agriculturii", nr.10/2005, București

4. Canarache, A. ş.a. - *Cercetări şi rezultate privind parametri agrofizici şi hidrofizici optimi ai fertilității solului*. În: Rev. Cereale și plante tehnice, nr. 10, 1989.

5. Bârcă, Gh. - *Noi utilaje şi tehnologii pentru lucrarea solului fără răsturnarea brazdei*. În Lucrãrile Simpozionului Probleme de mecanizarea agriculturii, vol. II, Universitatea Tehnicã Timișoara, 1991

CONSIDERAŢII PRIVIND DEZVOLTAREA DURABILĂ ÎN MEDIUL RURAL ÎN CONTEXTUL UNUI MANAGEMENT PERFORMANT AL APEI

CONSIDERATIONS REGARDING SUSTAINABLE DEVELOPMENT IN THE RURAL AREA IN THE CONTEXT OF A HIGH LEVEL WATER MANAGEMENT

C. NICOLESCU[1], I. BIOLAN[2], Florica MARDARE[2], Gh. SOVAIALA[1]

[1]INOE 2000-IHP; [2]INCDIF-ISPIF

Abstract: *The ecological systems are open, interconnected or self adjustable. In the structure of each system there are 2 main factors: an abiotic one (climatic, physical, chemical, pedological, geographical and geological) and a biotic one (referring at plants, animals, social and psychological factors). The ecological systems having a dynamic character in permanent change, are self adaptable, being able to provide ecological stability.*

Sistemele ecologice sunt deschise, interconectate sau autoreglabile. În componenţa fiecărui sistem, există doi factori fundamentali: un factor abiotic (climatic, fizic, chimic, pedologic, geografic şi geologic) şi un factor biotic (referitor la plante, animale, factori socio-psihologici). Sistemele ecologice având un caracter dinamic şi în continuă transformare, sunt capabile de autoreglare, putând să asigure echilibrul ecologic.

Un ecosistem cuprinde organismele vii specifice şi substanţele abiotice cu care interacţionează, sensul de bază, constând în faptul că toate organismele vii sunt într-o legătură naturală.

Dezvoltarea durabilă se poate defini prin realizarea cerinţelor a patru condiţii [1]:

- resursele energetice nu trebuie extrase mai repede decât refacerea lor pe glob;
- substanţele produse de societate, nu trebuiesc realizate mai repede decât pot fi distruse de natură ;
- spaţiile verzi nu trebuie diminuate, deoarece ele contribuie la regenerarea naturii;
- într-o societate a dezvoltării, pentru necesităţile de bază, trebuie să se recurgă la resurse cât mai eficiente, distribuite şi utilizate cât mai raţional.

În legătură cu procesul de urbanizare, se pune problema utilizării raţionale a suprafeţelor cu vegetaţie din zona rurală, incluzând şi terenurile cultivabile. Conform datelor statistice, suprafaţa acoperită de vegetaţie din zona rurală în anul 1700 a fost de circa 3-4 milioane km^2, pentru ca în anul 1900 să ajungă la 15-18 milioane km^2.

În figura 1, se prezintă schimbările survenite din punct de vedere al tipului de vegetaţie, în zona rurală, în perioada 1700-1900.

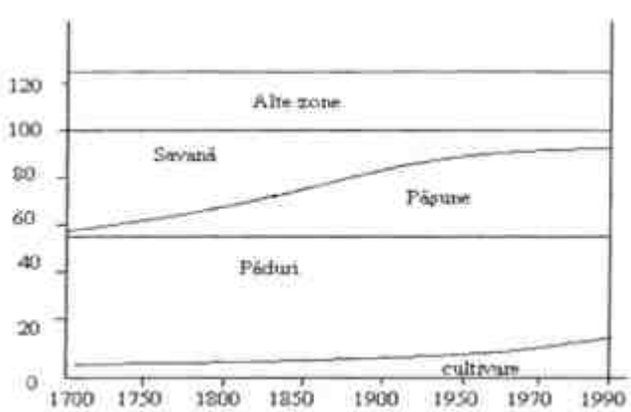

Fig 1- Schimbări în tipurile de vegetaţie din zona rurală

Se constată că, păºunile au crescut de la aproximativ 500 milioane km^2 în anul 1700 la aproximativ 3100 milioane km^2 în anul 1990.

Totodată se constată o modificare a zonei urbane, deoarece în anul 2000 circa jumătate din populaţia mondială a locuit în oraºe, îndeosebi, în apropierea resurselor de apă.

De asemenea, se menţionează că o parte din populaţia globului îndeosebi în Asia nu are acces la apă curentă.

INTERRELAŢIA DEZVOLTARE DURABILĂ - MANAGEMENTUL APEI

Din datele existente, rezultă că, pe plan mondial, 263 de râuri traversează două sau trei ţări. Volumul de apă transportat în aceste condiţii, reprezintă circa 60 % din apa potabilă de pe glob, fiind accesată de circa 40 % din populaţia mondială.

În legătură cu cele menţionate se pun, în principiu, trei probleme.

- În primul rând faptul că aceste situaţii sunt de tipul transfrontalier ºi din punct de vedere al relaţiilor diplomatice ºi administrative, implică multe ţări.

- În al doilea rând, pentru asigurarea unei dezvoltări corespunzătoare din punct de vedere ecologic, ceea ce interesează toate ţările implicate, se impune evitarea conflictelor între ţări.

- În al treilea rând, trebuie să se asigure un consens, privind recomandările de soluţionare a problemelor ecologice, bazate pe modele matematice care se referă la criteriile necesare a fi alocate care servesc ţările cu relaţii transfrontaliere.

Pentru soluţionarea din punct de vedere ecologic, a problemei complexe a apei transfrontaliere, se impun următoarele măsuri:

- de stabilit cine dispune de rezervele de apă ºi în ce măsură sunt implicate criteriile politice sau legislaţia în vigoare;

-în al doilea rând dincolo de aspectele politice ºi legislative, se pune problema managementului apei pe plan naţional;

- în al treilea rând apa constituie o necesitate în ceea ce priveºte fertilizarea.

Astăzi la nivel global, 1,1 miliarde de persoane nu au acces la apă potabilă, din care 63 % locuiesc în Africa.

Totodată 2,4 miliarde de persoane, nu au acces la îngrijire sanitară.

În 2002 GCRW (General Comment on the Right to Water) a reuºit să elaboreze dreptul la apă. Se mai menţionează că, evoluţia culturală redusă a femeilor ºi participare restrânsă a acestora la viaţa socială, determină ca acestea să nu contribuie la luarea deciziilor. De altfel, diferenţa dintre bărbaţi ºi femei în aceste ţări are un impact negativ atât de mare, încât depăºeºte inegalitatea dintre comunităţi.

ROLUL LEGISLAŢIEI ŞI AL INSTITUŢIILOR

Asigurarea pe viitor a unui mediu suficient de curat impune necesitatea elaborării unei legislaţii efectiv internaţionale privind mediul înconjurător.

Aceasta va sublinia obligativitatea protecţiei globale comune din partea tuturor statelor, asigurâdu-se o politică cu caracter internaţional, referitoare la o dezvoltare durabilă cu efecte practice reale.

Legislaţiile naţionale trebuie să fie pregătite să execute prevederiile legii internaţionale a mediului, asigurând, totodată implementarea acestei legislaţii.

ROLUL CERCETĂRII ŞTIINŢIFICE ŞI PRIORITĂŢI ÎN TEHNOLOGIA R & D

Se ºtie că energia există sub diferite forme ºi se transformă, continuu, dintr-o formă în alta . Evoluţia degradării mediului reprezintă un proces care nu poate fi definit în mod riguros. Din acestă cauză, calea care trebuie urmată pentru limitarea acestei degradări capătă, inevitabil conotaţii politice ºi economice, mai puţin bazate pe consideraţii ºtiinţifice.

Priorităţile de cercetare ºi dezvoltare identificate de misiuni de experţi, referitoare la managementul integrat al apei în mediul rural, au fost consolidate prin selectarea de R & D în zonele prioritare menţionate în cel puţin două rapoarte de ţară.

Tabelul 1 prezintă lista consolidată a tehnologiei ºi priorităţile de cercetare, dezvoltare pentru cinci ţări, precum ºi relevanţa acestora în cadrul strategiilor de conservare ºi îmbunătăţire a calităţii apei pe durata 1991-1992.

Tabelul 1

Prioritățile de R & D

Nr. crt	Domeniile prioritare	Conservarea apei	Îmbunătățirea calității apei
1	1.**Sistemul de evalure** - Identificarea soluțiilor cu performanță redusă - Evaluarea cerințelor de tehnologie	• •	• •
2	**Utilizarea de conjunctură și management** - Management acvifer -Tehnici de reîncărcare	• •	° °
3	**Îmbunătățiri ale sistemului de proiectare** -Îmbunătățiri la canalul de aductiune (regularizare) pentru o mai bună alimentare cu apă - revizuirea (formularea) unor criterii noi de proiectare pentru drenaj (distanță între drenuri, adâncime de pozare) -alternative de energie	• ° °	• ° •
4	**Îmbunătățiri de materiale** -materiale de cercetare: filtre	•	°
5	**Îmbunătățiri de întreținere** - Circuit integral de control - Echipament de evaluare	• °	° °
6	**Reutilizare** - Amestecul de apă slab mineralizată şi apă salină - Efectele asupra solului ale apei saline şi apei slab mineralizate - Consecințele refolosirii apei în domeniul sănătății	° ° °	• • •

• Influenţă puternică ° Influenţă redusă

REFOLOSIREA ŞI DISPUNEREA DRENAJULUI PENTRU AGRICULTURĂ

Presiunea asupra resurselor de apă a condus la regândirea posibilităţilor de refolosire a apei de drenaj pentru agricultură.

O serie de metode sunt acum disponibile, de exemplu utilizarea ciclică de apă dulce şi folosirea relativ scăzută /moderată de apă salină, la diferite etape de creştere a culturilor, combinarea volumelor cu grade diferite de apă salină, şi de stocare a apei saline în bazine de evaporare înainte de reutilizare.

Întrucât, epurarea apelor uzate urbane a avut o lungă tradiţie de analiză, de revizuire şi de stabilire a standardelor, tratarea şi reutilizarea apei de irigare a primit o atenţie relativ mai mică.

RESPONSABILITĂȚI ALE ORGANIZAȚIILOR GUVERNAMENTALE
(Studiu de caz pentru Turcia.)

Organizații pentru lucrări hidraulice cu importanță de stat (LHS), care răspund de planificarea, proiectarea, exploatarea, construcția și întreținerea sistemelor de irigare și drenare, de protecție împotriva inundațiilor, de investigații de cercetare, planificare, programare.

Direcția generală de servicii rurale (GDR) este responsabilă pentru dezvoltarea și utilizarea eficientă a terenurilor și resurselor de apă de către agricultori, de construirea, întreținerea, repararea și exploatarea de drumuri rurale, de alimentarea cu apă, energie electrică și instalații de canalizare pentru sate, amenajarea terenurilor slab productive (scheletice, acide, alcaline), pentru a le aduce într-o condiție potrivită pentru agricultură, pentru pregătirea și efectuarea de lucrări agricole de dezvoltare, cum ar fi irigarea pe fermă, instalații de drenare, canale, nivelare teren, consolidarea terenului, drenaj superficial, îmbunătățirea infrastructurii, planificarea construcției și exploatării mici instalații de pompare mici (asigurând până la 500 l/s, sau irigarea culturilor pe suprafețe sub 1000 ha), construcții și clădiri de operare, ateliere de lucru, laboratoare, stații de cercetare și alte facilități.

Ministerul Agriculturii şi Afacerilor Rurale este format din 13 direcții generale din care Direcția Generală de organizare și de aprovizionare este responsabilă pentru serviciile agricole extinse. O altă Direcție Generală de întreprinderi agricole este responsabilă pentru producerea de bunuri și servicii pentru a fi utilizate în agricultură de către agricultori.

Până la sfârșitul anului 1991, construcția a 150 de baraje mari a fost finalizată și pusă în circulație pentru un singur scop sau pentru cereri multifuncționale, cum ar fi cele de irigare, de energie, de controlul inundațiilor și al ofertei interne de apă. Cele mai multe dintre ele sunt umplute cu pământ sau baraje din anrocamente, cu o capaciatae totală de depozitare de 78.000 milioane m^3. De asemenea, 53 baraje sunt în construcție.

Investiția totală în LHS, sisteme de irigare, baraje, este estimată la 5.600.000 dolari SUA, la nivelul prețurilor din 1991.

O problemă majoră a multor **sisteme de irigare** este raportul scăzut de irigare, adică raportul dintre terenurile amenajate și cele efectiv irigate, în cadrul unui sistem.

Media națională a raportului de irigare este de 64 % - 72 %, la nivel regional este de (88 % - 22 %), iar fluctuațiile anuale sunt (59 % - 76%).

BIBLIOGRAFIE

1- Drăgan G., -,,Componente ale dezvoltării durabile", ISBN 978- 973- 27-1682-3;
ISBN 978- 973- 720- 185 -0, Editura Academică Română, Editura AGIR, București, 2008.
2- x x x - ,,Integrated rural water management,, Proceedings of the Technical Consultation on Integrated Rural Water Management, 15-19 march 1993, Rome, FAO, 1993.

DOZATOR PENTRU ECHIPAREA ARZATOARELOR DE PORUMB DE BOABE

DOSIMETER FOR CORN KERNELS BURNERS

Erol MURAD *, Victor-Viorel SAFTA *, Georgeta HARAGA *, Sava ANGHEL **

(*),Universitatea POLITEHNICA Bucuresti (**) INOE 2000 -IHP

Abstract: *The actual corn kernels burners are power supplied by helicoid carriers with variable revolution, which represents a very performant solution but also very expensive which requires corn kernels already peeled and sorted. For a safer and continuous operation was created a dosimeter which can use corn which was not sorted as well. From the performed tests in the range of revolutions of 2...10 rot-min it resulted a very good and even distribution, the average of a dose during the entire measuring interval is of 4,882 g-dose with max.variations of 0,2 g-dose.The process of dosing corn kernels has a stochastic character and in these circumstances was reached an average variation of 7,4% during the entire interval of revolutions, with a maximum of 9,5% very close values for a process like this (with a stochastic character) The average square deviation is in the range 3,55...7,24% which indicates a very low dispersion of the mass of doses.*

1. Aspecte generale

In prezent porumbul este încadrat în categoria culturilor energetice, cu un raport energie utilă/energie consumată egal cu opt, deci cu rentabilitate economică şi ecologică evidentă. In 2007, pe plan mondial s-au consumat 480.000 tone porumb boabe energetic pentru producerea de energie termică şi electricitate. Porumbul energetic se poate produce oriunde sunt condiţii agrotehnice minimale nefiind limitată producţia din considerente de calitate, fiind încadrat la utilizări industiale şi nu se afectează siguranţa alimentară.

Dozatorul trebuie să asigure o bună constanţă a masei dozelor la o turaţie constantă, să nu se blocheze, să nu se înfunde şi să permită o variaţie a debitului de alimentare într-un domeniu suficient de larg pentru a se acoperi necesităţile de putere termică cerute de la arzător.

Din încercările efectuate cu agregate termice în care se arde porumb boabe s-a constatat ca agregatul cel mai solicitat cu cele mai multe probleme tehnice şi de exploatare este transportorul cu melc utilizat aproape în toate agregatele realizate.

S-au produs blocări, de spargeri şi de înfundări, ceea ce a impus utilizarea unei mase de porumb boabe curăţate şi presortate, operaţiune care creşte preţul combustibilului şi reduce considerabil masa utilizabilă din totalul producţiei de porumb boabe. [3,4,5,6,7,8,10,11,12,13,14,15]

Pentru a se asigura alimentarea cu boabe de porumb cu un debit controlabil s-a conceput un dozator de porumb boabe de tip rotativ acţionat cu un motoreductor cu motor de curent continuu, pentru a se regla uşor şi precis debitului de alimentare prin variaţia turaţiei rotorului de dozare.

S-au facut foarte multe teste, facilitate de faptul ca peretele frontal al dozatorului a fost făcut din pexiglas transparent de înaltă duritate, ceea ce a permis o foarte bună observare a procesului, fotografierea şi filmarea acestuia. Dozatorul de boabe de porumb s-a testat funcţional un număr mare de ore pentru a se constata siguranţa în funcţionare şi a se face reglaje şi ajustări pentru mărirea siguranţei în funcţionare şi a stabilizării masei dozate. In acest scop s-a organizat şi realizat un program de încercări, la turaţii variabile pentru a se determina cât mai precis performanţele de dozare.

Rezultatele încercărilor au aratat că dozatorul asigură o funcţionare continuă, sigură şi o foarte bună constanţă a debitului de alimentare cu boabe de porumb a arzătorului.

Aceste rezultate au dus la concluzia că dozatorul conceput corespunde scopului propus şi a fost montat pe standul de ardere porumb boabe care a fost incercat funcţional cu bune rezultate.[1,2]

2. Dozatorul de porumb boabe

Dozatorul a fost proiectat pentru un debit de alimentare de 2kg/h. Pentru a se asigura o funcționare continuă de minim o oră la sarcina maximă buncărul de alimentare al sistemului de dozare are un volum util V_b :

$$V_b = \frac{D_{aln}}{\rho_{vbp}} \cdot 1{,}2 = \frac{2\,(kg.bp/h) \cdot 1\,(h)}{0.8\,(dm^3/kg.bp)} \cdot 1{,}2 = 3\,dm^3 \qquad (1)$$

Debitul discretizat de alimentare cu boabe de porumb D_{abp} este

$$D_{abp} = D_{a\ln} \cdot N_{abp} / 60 = 127(bp/\min) \qquad (2)$$

Debitul de dozare volumic D_{av} maxim este:

$$D_{av} = D_{al\max} \cdot \rho_{vbp} = 26{,}7(cm^3/\min) \qquad (3)$$

Dozatorul este de tip alveolar, cu dozare discretizată, în care, pentru un coeficient de umplere de maxim de 0,7, intră în medie 13 boabe. Rezultă că frecvența de descărcare este de 10 alveole/min. Pentru acuratețea încercărilor s-a utilizat o singură alveolă activă, ceea ce duc la o turație maximă de 10 rot/min.

Rotorul de dozare se alimentează dintr-un strat de boabe menținut la un nivel constant prin unghiul de taluz natural. Pentru a se realiza taluzul de alimentare, în buncăr, s-a introdus un perete despărțitor cu o prelungire reglabilă pe înălțime.

La încercări s-a folosit o singură alveolă pentru o mai bună observare a fenomenelor, precum și pentru creșterea preciziei de măsurare a masei dozelor (Fig.1).

Sistemul de acționare al dozatorului, cu motor de curent continuu, poate asigura variația turației în domeniul 2..35 rot/min ceea ce ar corespunde la o variație a debitului de alimentare în domeniul 1,2...10,5 kg.b.p/h, acoperitor pentru capacitatea de ardere a arzătorului încercat.

3. Standul de încercare a dozatorului

S-a realizat un stand pentru încercarea dozatorului de porumb boabe prin fixarea dozatorului, împreună cu sistemul său de acționare, deasupra unui cântar electronic de mare precizie, eroarea absolută = 0,01 g, cu cap de scală la 2000 g.

Fig. 1 Alveolă dozator porumb boabe

Motorul de curent continuu al dozatorului este alimentat de la sursa de tensiune stabilizată cu reglaj continuu și protecție la supracurent. Tensiunea de alimentare și curentul absorbit se măsoară cu două multimetre numerice de 2000 div.

Pentru calcularea turației axului dozatorului s-a utilizat un cronometru de precizie cu care s-a măsurat timpul pentru 10 rotații complete. Realizarea capacului dozatorului din plexiglass transparent de înaltă duritate a permis o foarte bună observare a fenomenelor de preluare a masei de boabe de porumb, precum și fotografierea și filmarea procesului de dozare la diferite turații.

In figura 2 este prezentată fotografia standului realizat pentru încercarea dozatorului de boabe de porumb.cu care au fost efectuate experimentele planificate.

Fig. 2 Stand dozator de porumb boabe

Se constatã cã dozatorul de porumb boabe, în varianta constructivã proiectatã, la turaţie constantã, realizeazã o bunã constanţa a debitului de alimentare, functioneazã continuu şi sigur cu porumb boabe nesortat o lungã duratã de timp, corespunzând scopului pentru care a fost realizat, asa cum se vede din figura 3.

4. Rezultatele încercărilor

S-au realizat teste pentru 5 turaţii diferite ale dozatorului: 2, 4, 6, 8 şi 10 rot/min. Pentru fiecare turaţie a axului dozatorului s-au realizat câte 10 probe a câte 10 doze fiecare.

Fiecare probã a fost cântãritã cu un cântar electronic de înaltã precizie.

S-a efectuat o analiza statisticã a rezultatelor încercãrilor pe teste şi pentru toate încercãrile. In continuare, sunt prezentate rezultatele obţinute pentru principalele mãrimi care definesc calitatea procesului de dozare.

In tabelul 1 sunt prezentate rezultatele prelucrãrii primare a datelor experimentale, referitoare la masa dozelor, pe tot intervalul de încercare. S-au calculat urmãtorii indicatori statistici: media, abaterea medie patraticã, varianţa, eroarea medie şi asimetría. Se constatã o foarte bunã constanţã a masei dozelor.

În tabelul 2 sunt prezentate rezultatele prelucrãrii statistice a erorilor absolute a dozelor faţã de medie, pentru aceia şi indicatori statistici.

In tabelul 3 sunt prezentate rezultatele prelucrãrii statistice a erorilor absolute a dozelor faţã de medie, pentru aceia şi indicatori statistici.

Se constatã cã media erorilor absolute este foarte aproape de zero ceea ce duce la concluzia cã experimentul a fost realizat în condiţii identice pentru toate probele.

Se mai poate trage concluzia cã procesul de dozare este un proces stohastic afectat de factori aleatori care se datoresc diversitãţii dimensionale ale masei de boabe de porumb. Chiar şi în aceste condiţii se constatã cã varianţa are o valoare medie de 7,4% pe întreg intervalul de turaţii mãsurat, având un maxim de 9,5%, valori foarte strânse pentru un proces în care este inclus un material de origine biologicã.

Fig. 3 Proces de dozare boabe de porumb

Abaterea medie patraticã sigma, are valori în intervalul 3,55..7,24 % ceea ce indicã o foarte micã dispersie a maselor dozelor, deci o precizie ridicatã a procesului de dozare. Un indicator important este eroarea medie, care se constatã cã are o valoare medie de 4.26 % şi variazã în domeniul 2,87..5.67 % ceea ce este extrem de redus pentru un proces de dozare în care s-a utilizat porumb nesortat, cu un mare coeficient de varianţã dimensionalã.

Se poate constata cã procesul de dozare cu aceastã variantã secţiunii alveolei şi cu preluarea bobelor de porumb dintr-un strat limitat de taluzul natural este precis, relativ puţin afectat de turaţia rotorului dozatorului, ceea ce permite simplificarea algoritmilor de conducere optimalããa procesului de ardere a boabelor de porumb, proces caracterizat printr-un timp mort mare, datorat acumulãrii de masã din corpul arzãtorului, necesarã pentru a se obţine puterea termicã necesarã.

Din literatura de specialitate, precum şi în cea de brevete se constatã o foarte micã cantitate de informaţie referitoare la conducerea procesului de ardere a boabelor de porumb.

Firmele producãtoare de agregate termice în care se arde porumb boabe nu dau nici o informaţie privind algoritmii de conducere, aceştia fiind întradevãr extrem de importanţi în realizarea unor performanţe dinamice corespunzãtoare în conducerea procesului de ardere. Pentru a se realiza un model al corelaţiei masã dozã turaţie dozator s-au efectuat prelucrãri ale datelor cu regresii liniare şi neliniare.

Rezultatele sunt prezentate în figurile 2.7 º i 2.8. Se constatã cã relaþia parabolicã reprezintã mai bine procesul de dozare cu un coeficient de corelaþie de 0,822, nu prea mare, dar normal pentru un proces în care intervine puternic caracterul aleator al dimensiunilor boabelor de porumb nesortate.

Tabel 1 Masã doze

Mărime	**Masă doză** (g)					
Indicator	Turaţie dozator (rot/min)					**Total**
	2.1	**4.26**	**6.12**	**8.13**	**10.33**	
Media	4.961	4.988	4.855	4.905	4.701	**4.882**
Sigma	0.244	0.283	0.356	0.229	0.167	0.272
Varianţa	0.059	0.08	0.095	0.052	0.027	0.074
Eroare medie	0.209	0.211	0.246	0.17	0.133	0.208
Asimetrie	0.545	0.788	1.351	-1.116	-0.539	0.620

Tabel 2 Erorile absolute

Mărime	**Eroare absolută** =Masă dozã -Media (g)					
Indicator	Turaţie dozator (rot/min)					**Total**
	2.1	**4.26**	**6.12**	**8.13**	**10.33**	
Media	0	0	-0.09	0.15	0	**4.882**
Sigma	0.244	0.283	0.356	0.229	0.167	0.294
Varianţa	0.059	0.08	0.095	0.052	0.027	0.272
Eroare medie	0.209	0.211	0.246	0.17	0.133	0.074
Asimetrie	0.545	0.788	1.351	-1.116	-0.539	0.208

Tabelul 3 Erorile relative

Mărime	**Eroare relativă** =100*(Eroare absolutã)/Medie (%)					
Indicator	Turatie dozator (rot/min)					**Total**
	2.1	**4.26**	**6.12**	**8.13**	**10.33**	
Media	0.08	0.004	-1.854	0.316	0	-0.481
Sigma	4.914	5.672	7.239	4.673	3.546	5.578
Varianţa	0.059	0.08	0.095	0.052	0.027	0.074
Eroare medie	4.221	5.672	5.058	3.462	2.87	4.257
Asimetrie	0.545	0.788	1.351	-1.116	-0.539	0.620

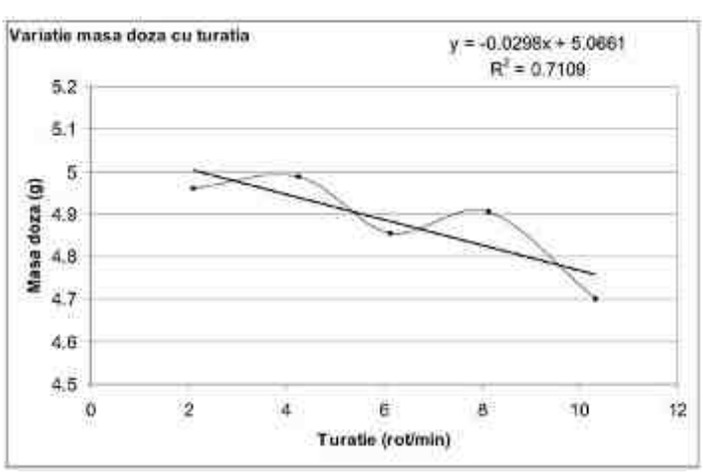

Fig. 2.7 Relaþie liniarã masã dozã-turaþie dozator

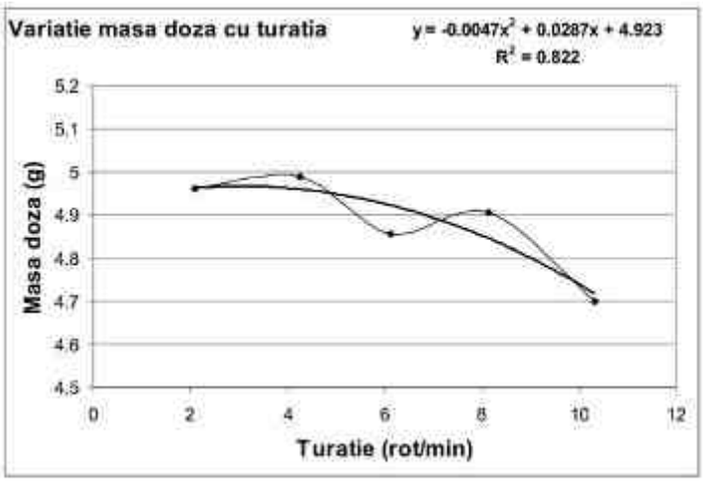

Fig. 2.8 Relaţie parabolică masă dozã-turaţie dozator

5. Concluzii

S-a realizat un dozator de boabe de porumb care preia doza dintr-un strat liber limitat superior de taluzul natural, ceea ce eliminã posibilitãţile de blocare a rotorului sau de spargere a boabelor de porumb. Standul de încercare pentru dozatorul de boabe de porumb, este dotat cu o sursã reglabilã de tensiune, aparate de mãsurare tensiune º i intensitate curent, cântar electronic de înaltã precizie, cronometru digital.

S-au efectuat încercãri pentru domeniul de turaţii 2..10 rot/min, suficient pentru necesitãţile standului de încercare a arzatorului de boabe de porumb.

Din prelucrarea datelor experimentale s-a constatat ca:

1. Media unei doze pe tot intervalul de mãsurare este de 4,882 g/dozã cu variaţii maxime de ± 0,2 g/dozã, ceea ce aratã o foarte bunã constanţã a procesului de dozare.

2. Media erorilor absolute este foarte aproape de zero ceea ce duce la concluzia cã experimentul a fost realizat în condiţii identice pentru toate probele.

3. Procesul de dozare este un proces stohastic afectat de factori aleatori care se datoresc diversitãţii dimensionale ale masei de boabe de porumb. Chiar º i în aceste condiţii se constatã cã varianţa are o valoare medie de 7,4% pe întreg intervalul de turaţii mãsurat, având un maxim de 9,5%, valori foarte strânse pentru un proces în care este inclus un material de origine biologicã.

4. Abaterea medie patraticã sigma, are valori in intervalul 3,55..7,24 % ceea ce indicã o foarte micã dispersie a maselor dozelor, deci o precizie superioarã a procesului de dozare.

5. Un indicator important este eroarea medie, care are o valoare medie de 4,26 % º i variazã în domeniul 2,87..5,67 % ceea ce este extrem de redus pentru un proces de dozare în care s-a utilizat porumb nesortat, cu un mare coeficient de varianţã dimensionalã.

Bibliografie

[1]. Murad E., Safta V., Haraga G,. *Arzătoare moderne de porumb boabe - caracteristici, performanțe economice şi eclogice,* Salonul regional de Cercetare VEST HERVEX 2008, Cãlimãneºti, 12 -14 noiembrie 2008

[2]. Murad E., Safta V., Haraga G,. *Porumbulcultura energetica*; Simpozion Protectia Mediului Bucuresti, UPB, ISB, 21 noiembrie 2008

[3]. Brevet de invenţie US 2007/021521 A1, *Apparatus and method for combustion (corn)*

[4]. Brevet de invenţie US 2007/0157858 A1; *High efficiency bio-fuel pellet and grain furnace*

[5]. Brevet de invenţie US 2007/0137538 A1, *Granular biomass burning heating system*

[6]. Brevet de invenţie US 2006/7004084 B1, *Corn burner*

[7]. Brevet de invenţie FR 2002/2826103 A1, *Foyer de poele a mai*

[8]. Brevet de invenţie US 7318431 B1, *Biomass burning stove and method*

[9]. * * * Manualul inginerului din industria alimentarã, Editura Tehnicã, Bucureºti, Vol. I, 1997, Vol. II, 1999

[10]. *** CORN FURNCE SCF 050, User Manual, Even Temp, Waco, NE

[11]. * * * CORN STOVE models 2100/4100/7100, User Manual, Nesco Inc., Cookevile, TN.

[12]. *** MAGNUM 6500/7500 CORN/WOOD PELLET FURNACE, User Manual, American Energy System INC.

[13]. * * * CORN & PELLET MULTIFUEL STOVE 6033, User Manual, United State Stove Comp

[14]. *** CORN & PELLET MULTIFUEL STOVE 6033/6039T, User Manual, United State Stove Comp.

[15]. *** GBU070 PELLET/CORN FURNACE, User Manual, Pinnacle Stove Sales Inc.

ECHIPAMENTE PENTRU RECICLAREA DEŞEURILOR TIP AMBALAJE ALIMENTARE DIN MATERIALE PLASTICE

EQUIPMENT FOR RECYCLING PLASTIC FOOD WRAPS

Dr. Ing. Mariana Florentina ª TEFÃNESCU[1]
Ing. Radu SAUCIUC[2] Ing. Liliana DUMITRESCU[2]
Ing. Grigore NIÞU[3]

[1] *UPB, Facultatea de Inginerie Mecanică şi Mecatronică*
[2] *INOE 2000 IHP*
[3] *SC HERVIL SA Rm. Vâlcea*

Abstract

The present paper present technologies and small size installations for sorting compressing, washing and separating plastic food wraps wastes produced by food industry.

Trebuie menþionat de la început cã existã o gamã diversã de echipamente pentru realizarea reciclãrii deºeurilor tip ambalaje alimentare.

Din studierea echipamentelor şi liniilor de reciclare existente pe piaţa mondială a rezultat că nu există în acest moment nicio linie destinată unor capacităţi mici de reciclare a ambalajelor alimentare şi care să cuprindă toate echipamentele necesare, respectiv compactor, maşină pentru mărunţit, instalaţie pentru spălare deşeuri şi instalaţie pentru uscare.

1.1 Echipamente pentru sortare

Sortarea sau inspecþia se realizează fie în vederea balotãrii deºeurilor, fie pentru intrarea în echipamentele de mãrunþire. Sortarea este primul pas în procesul de reciclare. De sortare depinde întregul proces de reciclare. De aceea trebuie să i se dea o mare atenþie. Procesul de sortare se desfãºoarã la locul de colectare a deºeurilor, pentru cantitãþi mici (întreprinderi mici), sau la centrele de reciclare, pentru cantitãþi mari de deºeuri.

Sortarea poate fi fãcutã în mai multe moduri: **manual, automat sau combinaţia lor**.

Sortarea manuală

Se sortează prin recunoaºtere vizualã ºi se îndepãrtează tot ce este altceva decât ambalaj alimentar de tipul containerelor PET, foliilor etc. În cazul sortãrii containerelor PET, sortarea pe bandã transportoare poate fi „negativã” (Fig. 1.1) sau „pozitivã” (Fig. 1.2).

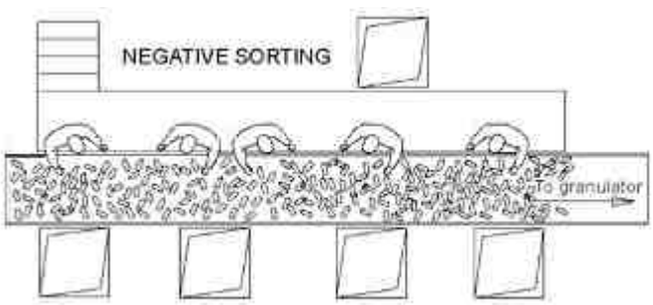

Fig. 1.1.
Sortare „negativã” pe bandã

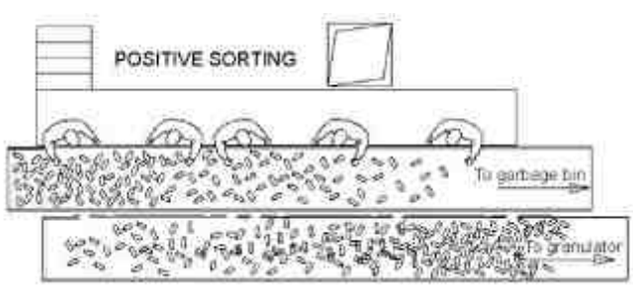

Fig. 1.2.
Sortare „pozitivã”pe bandã

La sortarea „negativã” operatorul alege de pe bandã tot ceea ce considerã cã nu este container PET, lucru înºelãtor în cazul amestecurilor de containere PET ºi PVC, LDPE. Se pot sorta în aceastã variantã deºeuri care au un debit de pânã la 500 kg/orã. Operatorul care realizează o astfel de sortare nu poate sorta mai mult de 150 kg/orã.

În cazul sortării „pozitive”, fiecare operator alege de pe banda transportoare containerele PET, le examinează ºi le depune pe altã bandã transportoare care le duce la granulator. Ceea ce rãmâne pe prima bandã e considerat gunoi .În aceastã variantã de sortare fiecare operator poate mânui între 80 ºi 100 kg de PET-uri pe orã, operaþia este mai înceatã, dar mai sigurã.

Sortarea automată

Oricât de atent ar fi un operator nu poate sã-ºi pãstreze acelaºi grad de vigilenþã. În acest caz se recurge la sortarea automatã. Aceasta este un sistem care foloseºte radiaþii infraroºii, spectroscopia de înaltã rezoluþie (NIR), detectoare cu radiaþii X, analiza imaginii, detectarea cu ajutorul a mai multe canale a metalelor. Primele au avantajul de a recunoaºte diferite tipuri de materiale plastice (PET, PS, PA, PVC etc.), în timp ce detectoarele cu radiaþii X pot scana ºi îndepãrta numai deºeurile alimentare din PVC.

Gradul de sortare creºte dacã sortarea automatã este precedatã de o sortare manualã.

Firma **TiTech Visionsort AS** este pionier în sortarea automatã a deºeurilor municipale. Tehnologia **TiTech PolySort** care sortează PET, PET-G, PE, PP, PS, EPS, ABS,PVC (Fig. 1.3) se bazează pe sortarea în infraroºu de pe bandã ºi combinã mai multe tehnici pentru mãrirea eficienþei (Fig. 1.4).

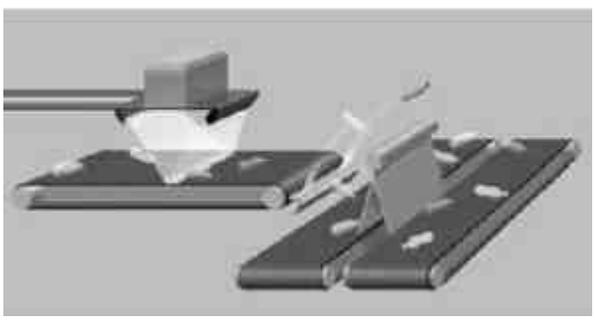

Fig. 1.3.
Tehnologie de sortare automatã bazatã pe sortarea în infraroºu pe bandã

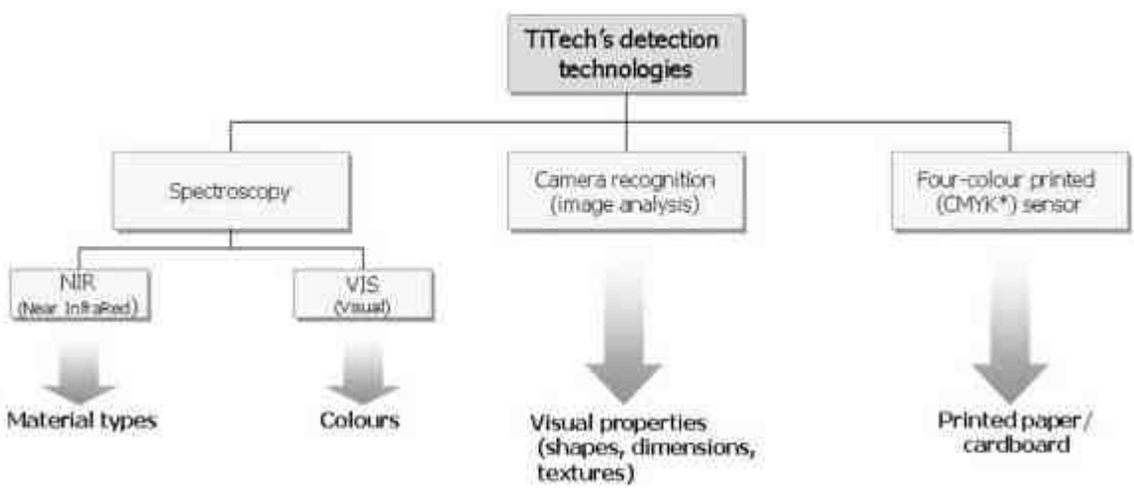

Fig. 1.4. Tehnici pentru mãrirea eficienþei în tehnologia **TiTech**

PELLENC Selective Technologies (PST) sortează pe douã direcþii sau pe trei direcþii (Fig.1.6). Cantitatea de sortare este de 2 400 kg/ orã. Nivelul de puritate al sortãrii este de 90-98 % ºi eficienþa de 90-96 %. Capacitatea de sortare este între 2 ºi 10 tone/ orã.

Fig. 1.6.
Tehnologia **PST** de sortare pe douã direcþii

Fig. 1.7.
Tehnologia **PST** de sortare pe trei direcții

Tehnologia de separare și sortare **S&S (Separation and Sorting Technology GmbH),** prezentată în Figura 1.8, folosită în Schönberg (Germany) este un procedeu automat de sortare a materialelor plastice tip PET sticlei și metalelor. Varianta **Varisort** separă și sortează containerele PET întregi. Folosește la sortare tehnologia în infraroșu și are o puritate de separare de 99,5 %.

1.2 Echipamente pentru compactare (balotare)

Compactarea deșeului colectat este o operație care ușurează depozitarea, transportul și operațiile ulterioare, procedură necesară în cazul deșeurilor alimentare care ocupă un volum mare. Echipamentele care realizează această micșorare de volum sunt: compactoarele și presele.

Fig. 1.8.
Tehnologia de separare și sortare **S&S Varisort**

S&S oferă și o adoua tehnologie de sortare după culoare a PET-urilor, numită **SPEKTRUM** (Fig.1.9).

Fig. 4.9.
Varianta **S&S SPEKTRUM,** de sortare după culoare

Compactarea filmelor alimentare

Procedeul de micșorare a volumului de ambalaje alimentare tip folie (Fig.1.10) prin vacuumare este utilizat de Firma **SANKO SHOJI LTD** și are o rată de compresie de 1:50. Se obțin balți prismatici ușor de depozitat și transportat.

a)

b)

Fig. 1.10. Sistem de compactare prin vacuumare **ASSHU-KUN**

Aceea şi firmă practică micşorarea volumului de ambalaje prin balotare rotundă (Fig. 1.11). Balţii au diametrul de 40 cmm şi înălţimea de 60 cm. Echipamentul are senzor foto pentru detectarea disfuncţiunilor de balotare, este nezgomotoasă şi uşor de manevrat.

Prese pentu compactare şi ambalare

Compactoarele ajută nu numai la menţinerea curăţeniei, dar reduc semnificativ poluarea, minimizează spaţiul de depozitare, reduc mirosurile şi riscul biologic, previn apariţia insectelor şi viermilor, îmbunătăţesc igiena locului şi, ceea ce este important pentru deţinător, reduc costurile prin recuperarea şi vânzarea deşeurilor recuperabile.

Rezultatul compactării Pet-urilor cu ajutorul preselor este reprezentat prin baloţi (Fig. 1.12).

Fig. 1.11. Balotare rotundă

Fig. 1.12.
Balot rezultat din compactarea realizată cu ajutorul preselor

In Tabelul 1.1 .sunt prezentate prese verticale şi orizontale de mică şi medie capacitate cu caracteristicile lor funcţionale .

Tabel 1

1	**Agri-mac V55 Vertical Baler**	- pentru volume mici de materiale - operare hidraulică - forţa de presare 2tone - baloţi de pânã la 75kg - timpul unui ciclu: 15s - greutate: 205 kg
2	**Model XP 300**	- greutate balot 20-50 kg - acţionare hidraulică - presiunea de lucru 0,5 MPa - grad de compactare 85-90% - timpul ciclului 10-20s - nivelul de zgomot 57-60 dB - diametru Ø: 450 mm - greutate 100kg - aprobat de Comunitatea Europeanã (CE)

3	**TCG -TL-100 Dual Chamber Compacting Unit**	- suprafața de lucru 686×490 mm^2 - forța de apăsare 1,5 tone - timpul ciclului 40s - rata de compactare 5:1 - conține patru containere de reciclare cu capac, în fiecare se pot compacta 95 de containere PET
4	**Perforator-aplatizor pentru butelii PET**	
5	**Compactor MRE**	- complet automatizat - capacitate: 4 tone/oră

1.2 Echipamente pentru mărunțire

Mărunțirea este realizată cu ajutorul tocătoarelor, morilor cu cuțite sau granulatoarelor. Procesele de mărunțire se pot realiza prin procedeul uscat și umed.

Ca și în cazul echipamentelor de sortare și compactare, sunt prezentate numai echipamentele de serie mică și medie, s-a realizat selecția prezentată în Tabelul 1.2.

Tabel 2

1	**Moară cu ciocane Alpine Omniplex®**	- îºi poate modifica caracteristicile (puterea, gradul de mãrunþire etc.) prin schimbarea rotoarelor profilate
2	**Wet Type Granulator**	- granulator de tip umed - instalaþia taie ºi spalã materialul mãrunþit în acelaºi timp - poate fi echipat (dupã cum apare ºi în figurã) cu sistem de uscare
3	**Tocător cu un singur arbore**	- este destinat ambalajelor subþiri, tip folie - din cauza presurizării electrice are un zgomot redus
5	**Shredder STG-400** 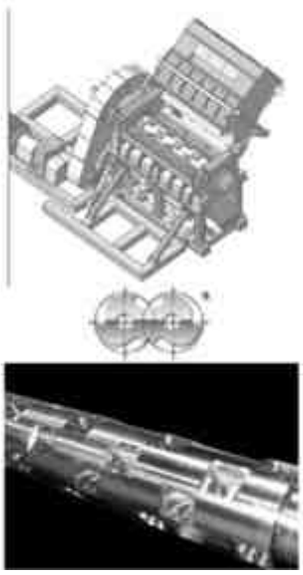	- motor electric de 261 kW - 26 de cuþite pe rotor - 12 cuþite - turaþia arberelui rotor: 125-140 rot/min - lungimea rotorului 2400 mm - diametrul cuþitului mobil: 635 mm

1.2 Echipamente pentru spălare, separare şi uscare

În instalațiile destinate reciclării deșeurilor operațiile de spălare, separare și uscare nu se realizează întotdeauna separat, ci sunt grupate într-un echipament multifuncțional. Astfel, operația de spălare are și un sistem de intensificare a operației care ajută și la realizarea separării: flotația. Flotația se bazează pe principiul migrării spre suprafață a particolelor solide, cu densitatea mai mică decât a lichidului de spălare, înconjurate de bule de aer. Pariculele mai grele vor rămâne la baza incintei de spălare.

În acest caz instalația de spălare are și o suflantă pentru aer. Spălarea „sută la sută" nu există.
Tocătura rezultată din containere PET are o densitate mai mare decât a apei și anume, aproximativ 1, 4 g/cm^3.
Instalația pentru reciclarea containerelor PET, prezentată în Figura 1.13, conține o instalație de spălare cu o putere de 7,5 kW, o instalație de clătire cu 2 melci cu o putere de 2×3 kW, o unitate de uscare cu o putere de 11 kW și o unitate de uscare cu o putere de 24 kW +4 kW. Curentul de apă (4 m^3) este adus de o pompă cu o putere de 4 kW.

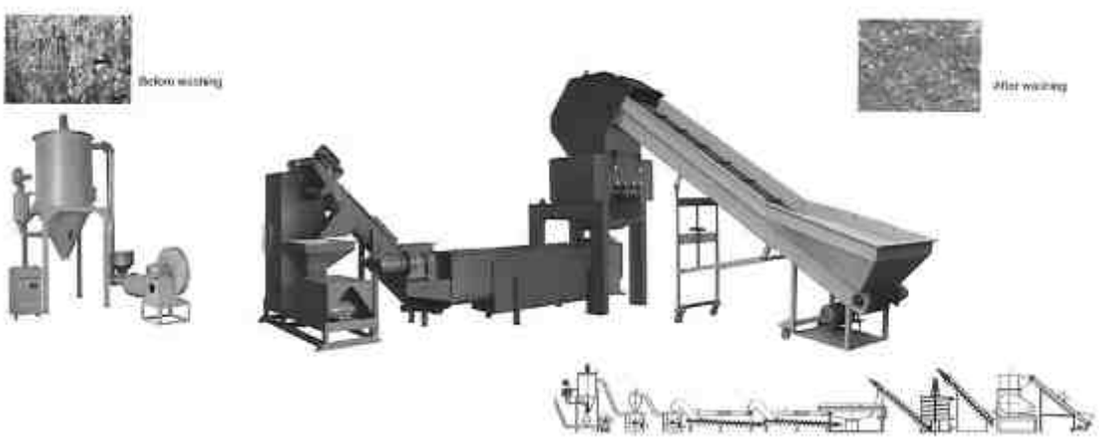

Fig. 1.13. Instalație pentru reciclarea containerelor PET

O linie completă de tocare, spălare, centrifugare, uscare și recristalizare PET-uri cu capacitatea de cca.500 kg/oră (Fig. 1.14), care se compune din :
-1 moară de tocat flacoane PET tip Moreto (Italia)
-1 unitate de spălare-producție Ungaria
-1 centrifugă-producție Ungaria
-1 uscător tip Moreto (Italia)
-1 unitate de recristalizare PET tip Piovan (Italia).

Fig. 1.14.
Linie completă de tocare, spălare, centrifugare, uscare și recristalizare PET-uri

Gama și diversitatea sistemelor de spălare nu se ridică la același nivel cu cele ale echipamentelor de compactare sau mărunțire.
Firma BONHOMIE Enterprise a conceput un sistem de spălare și uscare a ambalajelor tip folie (film) și corpuri cave (injecție-suflare). Instalația cuprinde un „tanc" de spălare, o pompă pentru alimentarea cu apă sub presiune și o suflantă pentru intensificarea procesului de spălare (Figura 1.15 și Tabelul 3

Fig. 1.15.
Sistem de spălare și uscare

Alegerea sistemului de separare depinde de tipul tocăturii (natură, dimensiuni) și de costurile fiecărei metode.
În timpul operației de spălare, fiecare particulă din materialul tăiat ia cu el o parte din apa de spălare. Centrifugele sunt unele dintre cele mai eficiente instalații atât de spălare cât și de uscare.

Tabel 3. Caracteristicile sistemului de spălare și uscare din Fig. 1.15

Model	Motor (CP)	Suflantă (CP)	Pompa de apă (HP)	Kg/oră - Film	Kg/oră – Injecție-suflare
WD-30	30	5	2	50 to 60	100 to 125
WD-60	60	5	2	110 to 125	225 to 250

Tabel 4. Modalitatea de alegere a lichidului de spălare pentru separare

Tipul de polimer	Densitatea [kg/dm³]												
	0.8		0.9		1.0		1.1		1.2		1.3		1.4
ABS					■	■							
EPDM	■	■											
Cauciuc natural moale			■	■									
Cauciuc vulcanizat							■	■	■	■			
HDPE			■	■									
PA					■	■	■						
PC								■	■				
PE			■	■									
PET											■	■	
PMMA								■					
POM													■
PP			■										
PS					■	■							
PVC-U												■	
PVC-P							■	■	■	■			

Concluzii

Sistemele de spălare, separare și uscare sunt integrate în instalațiile de reciclare a ambalajelor pentru deșeurile alimentare.

Sunt rare sisteme individuale pentru realizarea independentă a acestor operații.

STUDIU PRIVIND UTILIZAREA APELOR UZATE ZOOTEHNICE PENTRU FERTILIZAREA CULTURILOR AGRICOLE

I. BIOLAN**, C. NICOLESCU*, N. NICULAE**, Florica MARDARE**, Carmen NECULA**

STUDY REGARDING THE USE OF WASTE WATERS FROM LIVE STOCK FARMS FOR FERTILIZING THE CULTURES

I. BIOLAN**, C. NICOLESCU*, N. NICULAE**, Florica MARDARE**, Carmen NECULA**
**INCDIF-ISPIF, *INOE 2000-IHP

Abstract

The paper presents the methods of use of waste waters produced in live stock farms, the calcula for the amounts of water and fertilizers needed for cultures and the safe waste water use norms. The details presented are part of the watering technology which uses waste waters which must be followed strictly for an efficient use of animals dejections and preserving the environment safety.

1. Introducere

Dejecțiile lichide zootehnice de la complexele de bovine sunt considerate îngrășăminte organice tradiționale utilizate în gospodăria sătească. Lichidul de bălegar conține 92-97 % apă, poate fi ușor transportat prin conducte, fiind un îngrășământ complex de potasiu , azot și fosfor.

Înainte de a fi utilizat lichidul cleios de bălegar se diluează cu apa în proportie de 1:2, 1:5 sau 1:10, formând apa uzată. Lichidul cleios de bălegar este pe larg utilizat în Germania, China, Japonia, Franța, Canada, S.U.A. și alte țări.

Se aplică codul de bune practici agricole și Planul de implementare pentru Directiva 91/676/EEC privind protecția apelor împotriva poluării cauzate de nitrați proveniți din surse agricole, [7,8,9,10]. Trebuie utilizate cele mai adecvate materiale, tehnici, tehnologii și practici care să conducă la eliminarea sau la reducerea acumulării deșeurilor sau a altor poluanți [1,2,3,4,5,6].

2. Metode de distribuție a apelor uzate zootehnice la culturile agricole

Distribuția apelor uzate zootehnice la culturile agricole se realizează cu instalații de udare prin aspersiune, brazde și subterană [2,5,11].

Pe terenurile accidentate, se folosesc cisterne pentru împrăștiere și instalații de udare prin aspersiune. Dimensiunile maxime ale particulelor din compoziția apei uzate nu trebuie să depășească 1/3 din diametrul duzei dispozitivului de distribuție. Se preferă duze elastice din cauciuc pentru a se deforma în cazul blocării cu particule grosiere.

La irigarea prin aspersiune, lichidul este dispersat cu intensitate grosieră, medie sau fină, cu o uniformitate satisfăcătoare, bună sau foarte bună, funcție de tipul dispozitivului de distribuție, presiunea la acesta și diametrul duzei. Irigarea prin aspersiune cu ape epurate are următoarele avantaje: pot fi mecanizate și automatizate toate etapele de administrare; poate fi utilizată în cazul unui microrelief complicat, asigură o uniformitate mai bună de repartizare a apei uzate; oferă posibilitatea de a efectua udări cu norme mici.

Indicii calitativi ai udării la udarea prin aspersiune cu apă epurată sunt: intensitatea ploii, finețea ploii, norma de udare și uniformitatea distribuției.

Intensitatea medie orară se determină dupa relația (1):

$$i = \frac{60Q}{F} \qquad (1)$$

unde: Q-debitul aspersorului, l/s;
F-suprafața udată, m^2.

La distribuția lichidului de către aspersor, suprafața udată este:

$$F = \pi \times R^2 \qquad (2)$$

unde: R - raza de udare în m.

Raza de udare a aspersorului la udarea cu ape epurate este mai mică decât la udarea cu apa curată, conform relației (3):

$$R = R_B\left(1 - \frac{1-W}{W-0,3}\right) \qquad (3)$$

unde: R_B - raza de acțiune a dispozitivului de udare cu apă curată, m;
W-umiditatea solului de la suprafață, în % .

Din analiza formulelor rezultã cã, la irigarea cu ape epurate intensitatea ploii ºi raza aspersorului trebuie sa fie mai mare decat la irigarea cu apã convenþional curatã.
La udarea prin aspersiune, norma de udare se determinã cu relaþia:

$$m = i \times t \qquad (4)$$

unde: t - timpul de udare, min.

Alegerea intensitãþii admisibile se efectuezã funcþie de dimensiunile picãturilor, care la udarea cu ape epurate variazã de la 1,0 la 1,5mm. La udarea cu apã curatã, diametrul picãturilor variazã de la 0,5 la 1,0 mm. Se lucrează cu diametre mai mari la udarea cu apã epuratã pentru a reduce pierderile prin evaporaþie ºi a poluãrii mediului. La irigarea prin aspersiune cu ape epurate, pierderile de azot pot fi de 15 % $(k_p = 1,15)$ iar pierderile de fosfor ºi potasiu pot fi neglijabile $(k_p = 1,0)$.

Cercetãrile experimentale au arãtat cã pentru udare trebuie folositã apã epuratã diluatã, cu concentraþia mai mare de 92 %. La o normã de udare de 150-200 m^3/ha, pe solurile cu permeabilitate mare se pot forma bãltoace din cauza vitezei de infiltrare reduse a apelor epurate, fenomen ce favorizeazã poluarea localã a terenurilor ºi scurgerile de suprafaþã.
De aceea dispozitivul de distribuþie al instalaþiei de udare trebuie sã aibe o intensitate micã sau mijlocie $i = 0,35 mm/\min)$

Toleranþa la uniformitate la udarea prin aspersiune nu trebuie sã fie mai micã de 70 % pentru a realiza o fertilizare satisfãcãtoare a culturilor.

Principalele dezavantaje ale udãrii prin aspersiune cu ape epurate sunt urmãtoarele:

-se produce poluarea aerului cu aerosoli ºi mirosuri neplãcute ce se pot rãspândi pe distanþe de pânã la 1000 m;

-se pierde o parte din apã ºi substanþe nutritive prin evaporare (pierderile de azot pot fi ºi de 15%);

-se înrãutãþesc proprietãþile masei verzi din cauza reziduurilor ce ajung pe aceasta ºi necesitã o udare de spãlare cu apã curatã;

-sunt necesare cheltuieli energetice mari pentru udarea la presiune mãritã.

Udarea pe brazde cu ape epurate, se aplicã pe suprafeþe mai mari, la culturile agricole prãºitoare semãnate la distanþe mai mari ºi la ierburile/ culturile semãnate la distanþe mici.

Cerinþele la care trebuie sã rãspundã udarea pe brazde sunt urmãtoarele:

-sa conducã reziduurile cãtre terenul de irigat prinr-un sistem închis;

-sã nu admitã scurgerea apelor reziduale de pe terenul irigat;

-sã permitã mecanizarea procesului de udare;

-sã se administreze norme de udare precise;

-sã nu polueze apele de suprafaþã.

Udarea prin brazde înclinate trebuie organizatã astfel încât curentul de apã sã ajungã la capãtul aval al brazdei fãrã a deversa. Înclinarea brazdei în acest caz trebuie sã fie 0, 2 %-2 % iar debitul 0,05-1,5 l/s.

Pentru a organiza irigarea prin brazde este necesar sã se calculeze urmãtoarele elemente: lungimea brazdei, debitul de udare ºi durata udãrii. Aceste mãrimi sunt incluse în ecuaþia:

$$\frac{mLb}{g} = \frac{f_{med}}{(1-c)g} K_{1c} L \quad \frac{1}{c} = t_{par} \qquad (5)$$

unde:
- m = norma de udare pentru ca apa sã ajungã la capãtul brazdei, m^3/ha ;
- L= lungimea brazdei, L = 50....150 m;
- b = lãþimea intervalului dintre rânduri, m;
- g = debitul de apã necesar pentru udarea pe brazde, m^3/h;
- f_{med} = lãþimea activã de absorbire a apei din brazdã, m;

iar: $f_{med} = 0,1 gnp \bullet \frac{1}{3} \bullet \frac{1}{6}$ (6)

unde:
- n = coeficient determinat de acumularea apei în brazdã;
- c, K_{1C} = parametrii curbei de infiltrare;
- t_{par} = timpul de parcurgere a apei în brazda, în ore.

Irigarea prin brazde adânci ºi late se efectuezã pe pante mici de 0,001....0,002. Distanþa între rânduri trebuie sã fie min. 70 cm iar lungimea de 40....120 m.

Elementele tehnice ale udării prin brazde se determină pe baza relației:

$$qt = mLb \quad (7)$$

Lungimea brazdei se calculează cu relația:

$$L = \left(\frac{0,5hb - h_3}{i} \right) \quad (8)$$

- h_3 = înălțimea apei în brazdă, h_3 - 0,05....0,10 m;
- i = panta medie a brazdei, i = 0,002....0,007

O altă metodă de udare prin care se aplică apele uzate este **udarea subterană**.

Metoda prevede infiltrarea apelor epurate în zona radiculară, la adâncimea de 60 cm, prin galerii tip cârtiță, tuburi de ceramică și masă plastică, poroase sau perforate. În acest caz, 70 % din apa epurată este valorificată de plantele din cultură iar restul se infiltrează în sol și completează rezerva de umiditate.

Solul, prin capacitatea sa de absorbție, asigură epurarea completă a apelor reziduale din zootehnie. Acesta absoarbe substanțele gazoase, coloidale și cele dizolvate în apele uzate. Substanțele absorbite sunt descompuse până la compuși chimici simpli. Acești compuși îmbogățesc complexul absorbant și sunt asimilați de plante. Microorganismele patogene si ouăle de helminți ajunse în sol cu apele epurate, în condiții anaerobe se neutralizează.

Astfel, solul, apele freatice și mediul ambiant în ansamblu, nu este poluant.

La instalațiile artificiale de epurare nu este posibilă curățirea completă a apelor uzate de substanțele organice, agenți patogeni și microorganisme. De aceea este nevoie de o curățire secundară a apelor uzate înainte de udare.

Prin metoda subterană se aplică doza optimă de ape uzate. Acestea își pierd culoarea și mirosul, concentrația de săruri se reduce cu 30-70 %, sărurile de amoniu, azotul total și fosforul sunt absorbite în proportie de 99 %, sărurile de potasiu sunt absorbite în proporție de 85-99 %, și substanțele organice poluante în proporție de 98-100%.

Sărurile sunt absorbite de sol și descompuse de microorganisme, contribuind la ameliorarea indicilor hidrofizici ai solurilor.

Substanțele organice ameliorează structura solurilor, măresc porozitatea și permeabilitatea pentru apă a solului. În urma udării cu ape epurate sporește procentul de humus în sol și se îmbunătățește calitatea solului. Se poate obține un spor de recoltă comparativ cu al altor metode de udare și se îmbunătățește calitatea produselor agricole.

Irigarea prin metoda subterană cu ape epurate poate fi utilizată și în agricultura ecologică, pentru protecția apelor de suprafață /freatice.

3. Calculul necesarului de apă şi de îngrăşăminte la culturile agricole

Pentru a optimiza corelația dintre cantitatea de substanțe nutritive existente în sol și necesarul de substanțe chimice pentru obținerea producției dorite, normele de udare trebuiesc calculate pentru fiecare element: azot, fosfor, potasiu.

Norma anuală (m^3/ha) de irigare cu ape epurate se calculează pornind de la cantitatea de element nutritiv ce urmează să fie extrasă din sol de către plantă pentru a realiza producția dorită, utilizând formula:

$$M_C = \frac{E\beta K_P}{10 K_i \mu} \quad (9)$$

unde:
- E = cantitatea de substanță nutritivă necesară plantei pe unitatea de suprafață, kg/ha;
- K_p = coeficientul de pierderi ale elementelor nutritive în timpul păstrării și încorporării;
- K_i = coeficient de pierderi în timpul încorporării;
- μ = conținutul de elemente nutritive în apele uzate, %;
- ß = coeficientul de asigurare a solului cu substanțe nutritive.

Coeficientul de folosire de către plante a substanțelor nutritive din apele uzate este: 0,7-pentru azot; 0,6-pentru fosfor și potasiu.

$$K_P = 1 + K_{pas} + K_{inc} \quad (10)$$

unde:
- K_{pas} = pierderi în timpul păstrării;
- K_{inc} = pierderi în timpul încorporării.

Pierderile din timpul păstrării sunt: 0,15...0,30 pentru azotul total; 0,05...0,10 pentru potasiu și 0,05...0,15 pentru fosfor. Pierderile în timpul încorporării sunt: pentru azot prin metoda aspersiune-0,15 , prin scurgere la suprafață 0,06 iar pierderile de fosfor si potasiu nu se atestă.

Coeficientul de asigurare a solului cu substanțe nutritive este 1,2; 1,0; 0, 8 pentru categoria de asigurare redusă, medie si înaltă.

Suprafața F a terenului supusă irigării se calculează cu relația:

$$F = \frac{Q}{0{,}1M} = \frac{10Q}{HC - Oc} \qquad (11)$$

unde:
- Q = debitul anual, m^3/an;
- M = norma de irigare cu ape uzate, cm/an;
- C = număr de săptămâni;
-H = norma de udare cu ape uzate, cm/saptamana;
- Oc = precipitațiile anuale, cm/an.

Cantitatea de azot anuală N, în kg/ha, se calculează după ecuația bilanțului azotului:

$$N = Ba + Da + Pa \qquad (12)$$

unde:
- Ba =cantitatea de azot extrasă din sol de cultura, kg/ha;
- Pa = cantitatea de azot pierdută din sol prin denitrificarea azotului, kg/ha;
- Da = cantitatea de azot ce ajunge în apele freatice, kg/ha.

La clasificarea solurilor după gradul de asigurare cu substanțe nutritive se ține cont de trei indici: conținutul de forme mobile de fosfor, potasiu schimbabil și azot ușor hidrolizibil. Dacă reziduurile se diluează cu diferite feluri de ape epurate, la calcularea normei anuale trebuie să se țină cont și de cantitatea de substanțe nutritive conținute în acestea.

Norma anuală de folosire a apelor epurate se obține astfel: se calculează cantitatea de substanțe nutritive extrasă din sol de către plante pe o perioadă de 1 an, din rotația asolamentului pentru fiecare cultură la cele trei elemente biogene: azot, fosfor și potasiu.

Cu formula (9), se calculează norma anuală de aplicare a apelor epurate pentru fiecare cultură din asolament la fiecare element biogen. Din toate cele trei rezultate obținute prin calcule se ia norma minimă.

Norma de ape epurată folosită la fiecare udare se calculează prin împărțirea normei anuale la numărul de udări, care pot fi de umectare-fertilizare sau numai de fertilizare.

Nu este indicată aplicarea unor norme anuale de ape epurate, în care cantitatea de azot total să depășească 300 kg/ha. Dozele de îngrășăminte obținute se folosesc ulterior pentru repartizarea suprafețelor din asolament și la alcătuirea regimului de udări de umectare- fertilizare.

4. Stabilirea regimului de irigare cu ape uzate

Regimul de irigare al culturilor agricole cu apă și reziduuri trebuie să țina cont de regimul de irigare a fiecărei culturi din asolament, de particularitățile pedologice ale fiecărui teren, precum și de condițiile de organizare a muncii, efectuarea operațiilor de lucrări ale solului după udare cât și a celorlalte lucrări. Regimul de irigare se determină pentru un teren din asolament, ocupat cu diferite culturi și capătă un aspect de grafic al regimului de irigare sau grafic de hidromodul (consum specific).

Graficul are pe axa absciselor durata de udare iar pe axa ordonatelor consumul specific de apă uzată, $\left(\frac{l}{sha}\right)$

Alcătuirea graficului este precedata de executarea următoarelor calcule:

1. Se calculează suprafața necesară pentru utilizarea completă a apelor epurate în irigație, ținând cont de condițiile locale de amplasare a complexului zootehnic. Pentru aceasta se alege tipul asolamentului și se repartizează suprafețele pe care vor fi folosite apele epurate pentru fiecare cultură și pentru fiecare element, cu formula:

$$T_i = \frac{V_u}{M_{ci}} \Delta \qquad (13)$$

unde:
- V_a = volumul anual de apã uzatã, m^3;
- M_{ci} =norma de ape uzate datã la cultura pentru fiecare element : azot, fosfor º i potasiu, m^3/ha;
- Ä = cota suprafeþei ocupatã de cultura din asolament.

Drept suprafaþa de calcul pentru udarea cu ape epurate a fiecãrei culturi din asolament, se iau valorile maxime ale celor trei rezultate de la elementele biogene.

Aceastã suprafaþã se corelează cu productivitatea sezonierã calculatã a tehnicii de irigare º i suprafeþele terenurilor º i asolamentelor proiectate.

In cazul cã, sursa de udare are rezerve suficiente º i suprafeþe bune de irigat care pot garanta consumul de apã calculat, se admite mãrirea suprafeþei calculate prin valorificarea apelor epurate în scopul : asigurãrii plantelor cu 50..70 % din necesarul de îngrãºãminte prin folosirea apelor epurate iar restul prin încorporarea îngrãºãmintelor minerale; crearea unei baze furajere sigure pentru complexul zootehnic; folosirea în irigaþii a întregului volum de ape epurate în anii cu precipitaþii.

2. Prin metodele existente se calculează norma de irigare M_{ir}, care în cazul apelor epurate este:

$$M_{ir} = M_{ap} + M_{an} \qquad (14)$$

unde:
- M_{ap} = norma de udare cu apã curatã, m^3/ha;
- M_{an} = norma de udare cu apã uzatã, m^3/ha.

Daca norma anualã de apã uzatã acoperã º i deficitul de apã din sol avem relaþia:

$$M_{ir} = M_{an} \qquad (15)$$

Relatia (14) mai poate fi scrisã º i astfel:

$$M_{ir} = n_a m_a + n_r m_r \qquad (16)$$

unde:

n_a, n_r = numãrul de udări cu apã curatã º i respectiv uzatã;

m_a, m_r =norma de udare cu apã curatã º i respectiv uzatã.

Pentru a spori eficienþa filtrãrii naturale a apelor epurate în sol se udã fracþionat de 3..5 ori în decursul unei perioade de vegetaþie, atunci când plantele au cea mai mare nevoie de substanþe nutritive.

Pe terenurile cu ierburi anuale, prima udare de fertilizare trebuie facutã în faza de înfrãþire º i se administrează o jumãtate din volumul anual de ape epurate. Cealaltã cantitate de ape epurate se administrează în faza de formare a paiului º i de înflorire.

Pe terenurile cu ierburi multianuale, apele epurate trebuie administrate primãvara devreme, când începe vegetaþia iar mai târziu după fiecare coasã. Pe terenurile cu culturi cerealiere prima udare se realizează înainte de semãnat iar urmãtoarele în perioada de vegetaþie ale plantelor când au 4-7 frunzuliþe, cu o sãptãmânã pânã la înspicare º i la înflorire. De obicei apele epurate se administrează în amestec cu apa curatã iar norma de udare în acest caz este:

$$m = m_a + m_r \qquad (17)$$

unde:
- m = norma de udare cu apã curatã º i epuratã, m^3/ha.

3. Se alege tehnica de irigare sau udare, se elaborează schemele tehnologice de exploatare º i schemele tehnologice de debitare a apei curate º i epurate de la staþiile de pompare sau de la sursele de apã existente.

4. Se calculează consumul specific (hidromodulul) pentru debitarea apei curate º i epurate, după formula :

$$q = \frac{\Delta m}{86{,}4t} \qquad (18)$$

unde:
- t = perioada de irigare, în zile;
- 86,4 = coeficientul de transformare, care ia în calcul numarul de secunde în 24 de ore.

Durata perioadei de irigare pentru tehnica de irigare, se calculează cu relaþia:

$$t = \frac{mF_u}{86{,}4 \sum Q_m K_{zi} \beta} \qquad (19)$$

unde:
- F_n = suprafaţa netă a terenului, ha;
- ÓQ = suma cantităţilor de apa de la instalaţiile ce funcţioneaza simultan pe acelaşi teren, l/s;
- K_{zi} = randamentul timpului de funcţionare al instalaţiei în 24 de ore;
- â = coeficientul ce indică durata funcţionării instalaţiilor pe zi,

$$\beta = \frac{T}{24} \qquad (20)$$

unde:
- t = numarul orelor de funcţionare ale instalaţiei, în 24 de ore.

Valoarea q se calculează separat pentru apă curată şi apă epurată.

Udarea fiecărei culturi se desenează pe grafic în formă de dreptunghi, având pe ordonată hidromodulul şi pe abscisa timpul de udare. Desenarea graficelor începe de la cultura udată de cele mai multe ori, având o durată mare a udărilor. Dacă udările a două sau mai multe udări coincid, ordonatele hidromodulului se cumulează iar dreptunghiurile parţial sau în întregime se suprapun unul peste altul.

5. Concluzii

Valorificarea dejecţiilor lichide zootehnice de la bovine este necesară pentru: reducerea poluării apelor, solului şi aerului; fertilizarea culturilor agricole şi suplimentarea cantităţilor de apă la culturile agricole aflate în vegetaţie.

Cunoaşterea tehnologiei de administrare a apelor epurate este o cerinţă importantă pentru o valorificare eficientă a apelor uzate.

Lucrarea prezintă metodele de distibuţie a apelor epurate prin aspersiune, brazde şi udare subterană, indicatorii tehnici de control ai procesului şi elementele regimului de irigare.

La udarea prin aspersiune, intensitatea udării şi raza de acţiune sunt mai mari decât la irigaţia cu apă curată.

Pierderea de azot la irigaţia prin aspersiune cu ape epurate poate să ajungă la 15 %.

Bibliografie

[1] Buzea, I., Trandafir, St., Moteanu, Fl., *Mecanizarea lucrărilor de administrat îngrăşăminte şi amendamente*, Editura Agrosilvică, Bucureşti, 1968;
[2] Moteanu, Fl., *Maşini noi pentru fertilizarea culturii agricole în timpul vegetaţiei*, ICPA, Biblioteca Agricolă, Bucureşti, 1982;
[3] Costache, N., Luca, G., *Mecanizarea lucrărilor de chimizare în agricultură*, Editura Ceres, Bucureşti, 1982;
[4] Candelon, Ph., *Les machines agricoles*, vol. I; *Materials de preparation et de fertilisation de sols*, Paris, Bailliere,1981;
[5] Buzea, I., Lungu, Gr., *Mecanizarea aplicării îngrăşămintelor*, Editura Ceres, Bucureşti, 1974;
[6] Scripnic, V.,Babiciu, P., *Maşini agricole*, Editura Ceres, Bucureşti, 1979;
[7] Cod de Bune Practici Agricole – Ministerul Apelor şi Protecţiei Mediului, Bucureşti, 2002;
[8] Planul de implrmentare pentru Directiva Consiliului 91/676/EEC, privind protectia apelor impotriva poluarii cauzate de nitratii proveniti din surse agricole;
[9] Ordinul nr.296/11.04.2006 al Ministerului Mediului şi Gospodăririi Apelor;
[10] Ordinul nr.216/13.04.2005 al Ministerului Agriculturii, Pădurilor şi Dezvoltării Rurale;
[11] Biolan, I. şi colaboratorii – Pompa dozatoare, Brevet RO nr. 102 887.

NOI METODE DE INTERVENTII PE CONDUCTE CU LICHIDE SUB PRESIUNE

NEW METHODS OF INTERVENTION ON PIPES FILLED WITH FLUID UNDER PRESSURE

Ing. Stefan ALEXANDRESCU*, dr.ing Costinel POPESCU*
Dr.ing.Daniel MARIN** dr.ing. Despina DUMINICA**

**INOE 2000-IHP*
***SC General Fluid SA*
****UPB*

Abstract: *The technology is used at interventions on pipes, through which flow fluids under pressure. The interventions are performed for:*

- *Mounting counter szstems for heating, hot and cold household water, for invocing consumption*
- *Expand new networks or branches of pipes*
- *Repair damages at metallic pipes*

The use of this technology is economically efficient and its advantage consists in the fact that during interventions the supply at consumers is not interrupted. The main procedures are performed with 2 devices:
- Sealed drilling device for drilling the under pressure pipe
- Device for obturating and sealing pipes
Key words: interventions, cuts, obturation, pipes

1. DOMENIU DE UTILIZARE

In situatia actuala, in cazul interventiilor pe conducte, se intrerupe circuitul din conducta inchizind robinetul din amonte, in punctul termic sau in statia de pompare in cazul furnizarii de apa rece. Cantitatea de apa din tronsonul de teava este apoi deversata in exterior, inregistrindu-se o pierdere importanta de energie si de fluid. Dupa interventie, pentru punerea in functiune a instalatiei este nevoie ca mai intii aceasta sa fie umpluta cu apa incalzita la temperatura necesara si apoi aerisita. Aceste faze ale interventiei sunt generatoare de cheltuieli de productie care se regasesc in facura consumatorului.

Un alt dezavantaj pe care il resimt consumatorii, care sunt racordati la conducta pe care se face interventia este acela ca in aceasta perioada utilitatile sunt intrerupte.

Metoda noua care se aplica elimina dezavantajele de mai sus, reducand costurile de productie in cazul inserarii de aparate pe tronsoane si costurile mentenantei in cazul inteventiei pentru avarii. Aceasta este posibila deoarece solutia construtiva si functionala a dispozitivelor permite utilizarea acestora pe conducte prin care circula lichide cu presiune de functionare de maxim 6 bar. In plus, consumatorii din amonte de interventie nu mai sunt afectati de intreruperea utilitatilor pe perioada de interventie.

2. CARACTERISTICI TEHNICE

- Diametrul nominal al conductei……...Dn 80;
- Presiunea de lucru din interiorul conductei…….max. 6 bar;
- Lichidul din conducta.....apa ;
- Temperatura lichidului .....max.95ºC ;
- Fixare .....filet G 2 ½";
- Turatia recomandata a carotei:.....150…200 rot/min;
- Viteza de avans longitudinal:.....1…1,4 mm/min;
- Diametrul carotei:..... Ø 57;
- Materialul tevii:..... OLT 35;

3. DESCRIEREA DISPOZITIVELOR AFERENTE NOII METODE DE INTERVENTIE

Echipamentul pentru interventii pe conductele cu lichide sub presiune este compus din doua dispozitive- fig.1:

- dispozitivul etans de gaurire-decupare a conductei sub presiune;
- dispozitivul de obturare a conductei.

Fig.1. Dispozitivele aferente tehnologiei de interventie

Fig.2. Ansamblul dispozitiv de decupare cu masina de gaurit cu turatie reglabila.

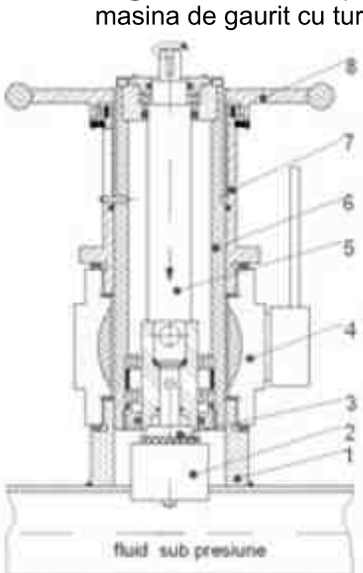

1- stut
2- scula de aschiere (carota)
3- portscula
4- robinet cu sfera
5- arbore de rotatie
6- coloana de avans
7- carcasa
8- roata de manevra

Fig.3. Dispozitiv de gaurit (decupare) - elemente componente

Dispozitivul realizeaza concomitent o miscare de rotatie, de aschiere, combinata cu miscarea de avans longitudinala. Solutia constructiva asigura etansarea statica si dinamica in timpul fazei de aschiere si retragere a coloanei de avans.

Montajul dispozitivului de gaurire (decupare), se realizeaza cu carota ridicata la maxim.

3.1. DESCRIEREA DISPOZITIVULUI ETANS DE GAURIRE (DECUPARE)

Solutia constructiva este brevetata conform Hotaririi nr.4 / 105 din 29.05.2009 OSIM.

Dispozitiv etans pentru gaurire (decupare), prezentat in fig. 2 (vedere de ansamblu) si fig.3 (structura constructiva) are in componenta urmatoarele elemente principale:

- carcasa;
- scula taietoare (carota);
- coloana pentru realizarea miscarii de avans a carotei;
- arbore pentru realizarea miscarii de rotatie a carotei.

3.2. DESCRIEREA DISPOZITIVULUI DE OBTURARE

Solutia consructiva se afla in curs de brevetare conform cererii nr. A / 00106 / 14.02.2007-OSIM.

Dispozitivul de obturare prezentat in vedere in fig. 4, a fost conceput pentru a obtura si etansa conducte prin care curge fluidul sub presiune. Elementul principal al dispozitivului este obturatorul elastic deformabil, care isi mareste volumul prin creearea unei presiuni in interiorul acestuia.

Fig. 4. Ansamblul dispozitv de obturare cu pompa manuala

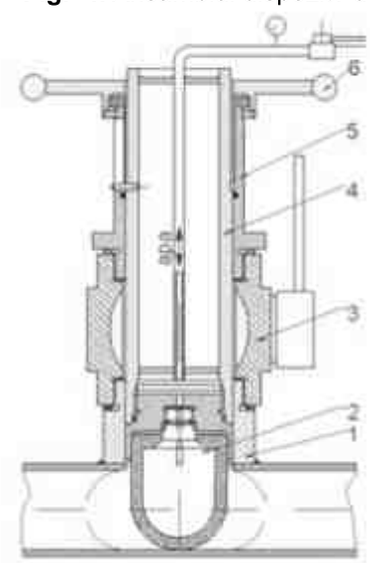

1- stut
2- obturator elastic deformabil
3- robinet cu sfera
4- coloana de avans longitudinal
5- carcasa
6- roata de manevra

Fig.5.Dispozitivul de obturare (componenta)

4. DESCRIEREA MODULUI DE APLICARE A METODEI NOI DE INTERVENTIE

Procedurile detaliate de aplicare a tehnologiei de interventi sunt redate in *MANUALUL DE UTILIZARE* care insoteste produsul la livrare. Etapele principale de aplicare ale metodei noi de interventie sunt urmatoarele:

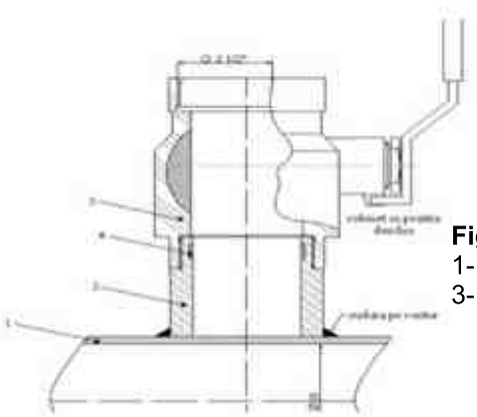

Obturatorul elastic fig.6, are o constructie speciala, avand in componenta un miez metalic care ii asigura rezistenta mecanica la fortele statice si dinamice.

Fig.6. Obturatorul elastic deformabil

La exteriorul miezului se monteaza un balon din elastomer care se deformeaza in momentul cand in interiorul acestuia se creeaza o presiune. Presiunea din interior trebuie sa fie suficient de mare pentru a se asigura forta de deformare dar si invingerea fortelor de curgere.

4.1. ACTIVITATEA PREGATITOARE A INTERVENTIEI

Inainte de inceperea interventiei la conducta sub presiune, se realizeaza un subansamblu tehnologic fig.7- constituit dintr-un bosaj sudat pe teava pe care se face interventia si un robinet cu sfera G 1 ½"care se infileteaza in bosaj.

Fig.7- subansamblul tehnologic (sectiune si vedere)
1- teava pe care se face interventia, 2- bosaj,
3- robinet 1 ½", 4- inel de ghidare

Bosajul se sudeaza pe contur, perpendicular pe generatoarea superioara a conductei.

4.2. TEHNOLOGIA DE LUCRU CU DISPOZITIVUL ETANS DE GAURIRE (DECUPARE)- fig.8

Dupa operatia de montaj a dispozitivului, se apropie carota de teava care trebuie gaurita, prin deplasarea axiala a coloanei de avans (surub) prin actionarea rotii de manevra (piulita). In continuare, se trece la operatia propriu-zisa de gaurire (decupare), antrenaind in miscare de rotatie arborele, prin intermediul unei masini de gaurit portabile monofazata. Concomitent cu miscarea de rotatie a arborelui, se realizeaza miscarea de avans axial a coloanei, prin actionarea rotii de manevra.

Fig.8. Montajul dispozitivului de gaurit (decupare)

Fig.9. Suprafata decupata din teava

Dupa operatia de decupare a suprafetei circulare Ø57, din teava cilindrica, se opreste miscarea de rotatie a masinii de gaurit, se ridica carota si se inchide robinetul. In figura 9 este vizualizata suprafata decupata din teava pe care se efectueaza interventia.

Fig.10. Dispozitivul de obturare montat pe teava de interventie

Fig.11. Obturatorul nedeformat.

Dupa finalizarea lucrarilor in aval de punctul de obturare, obturatorul deformabil se descarca de presiune prin deschiderea robinetului. In continuare, actionand roata de manevra se retrage obturatorul, se inchide robinetul G 2 1/2" si apoi se demonteaza dispozitivul.

4.3. TEHNOLOGIA DE LUCRU CU DISPOZITIVUL DE OBTURARE

Montajul dispozitivului fig.10, se realizeaza pe subasamblul utilizat la faza de decupare. Se ridica obturatorul la cursa maxima, apoi se infileteaza dispozitivul pe robinetul cu sfera - G 2 1/2”, situat in pozitia deschis.. Prin actionarea rotii de manevra, prin intermediul mecanismului surub-piulita, se coboara obturatorul pana ajunge in contact cu suprafata interioara a tevii, al carui circuit de curgere trebuie obturat si etansat, fig.11. Din acest moment se introduce in interiorul obturatorului elastic apa sub presiune cu pompa manuala, deschizind in prealabil robinetul de pe acest circuit. Dupa ce sectiunea tevii este obturata si etansata, se inchide robinetul pompei si se poate interveni pe conducta.

5. NIVEL DE COMPETITIVITATE

Tehnologia noua, ca rezultat al programului de cercetare in domeniul inovarii confirma capacitatea agentilor economici de a rezolva o cerinta importanta a economiei nationale. Nivelul de competitivitate si eficienta ridicata reflectat de rezultatele interventiei este sustinut de urmatoarele aspecte:

- factori tehnici: caracteristicile tehnice superioare ale tehnologiei cu dispozitivele aferente sunt directionate în sensul satisfacerii maxime a exigențelor si cerințelor clienților;

- factori financiari: prețul este suportabil pentru clienti, iar condițiile de plată sunt avantajoase;

- factorii de suport: serviciile auxiliare ("service"-ul) asociate cresc valoarea adăugata (de exemplu : prin mentenanță, instruire, consultanță, furnizare de piese de schimb,)

- factorii de desfacere/vânzare: termenul de livrare, condițiile de livrare, modalitățile de distribuire/vânzare sunt elemente suplimentare care cresc competitivitatea produselor si a agentilor economici.

La nivel european nu se dispune de informatii referitoare la existenta unei tehnologii similare si in consecinta nu exista conditii de evaluare si comparare.

Caracteristicile legate de calitate ale dispozitivelor se concretizeaza prin utilitatea practica deosebita si facilitatile pe care le resimte utilizatorul produsului. SC. General Fluid SA, in calitate de producator a implementat Sistemul de Mangement al Calitatii in conformitate cu standardul SREN ISO 9001; 2001

Din punct de vedere al indicatorului calitate/pret dispozitivele complementare tehnologiei au caracteristici tehnice ridicate cu un nivel suportabil pentru pret corelat cu costurile de productie si distributie. La aceste costuri se adauga marja in valoare absoluta care reprezinta profitul fabricantului.

Asimilarea tehnologiei dispozitive si know-how conduce la cresterea capacitatii proprii de proiectare-dezvoltare de produs, reprezentind o garantie pentru participarea la programe de cercetare, viitoare. Deasemenea, contribuie la dezoltarea cunostintelor, aptitudinilor si cresterea competentei tehnice a personalului in firma. Din punct de vedere economic va contribui la crestera cifrei de afaceri astfel ca in viitor, afacerea va fi deosebit de profitabila.

Efecte la utilizator: Printre cei mai importati clienti ai tehnologiei mentionam: SC.GENERAL FLUID SA si filialele din tara, RADET, agenti economici care au in domeniul de activitate distributia energiei termice, APA NOVA- apa rece.

- Utilizarea acestei tenhologii noi va avea un impact pozitiv in strategia generala a agentilor economici in domeniul instalatiilor de incalzire, apa calda menajera, instalatii sanitare, etc.

- Productivitatea muncii, va creste considerabil deoarece metoda de interventie cu cele doua dispozitive reduce durata operatiei foarte mult.

- Durata de exploatare a dispozitivelor este suficient de mare. Greutatea si gabaritul scazut permit deplasarea dispozitivelor in diferite puncte de lucru in vederea aplicarii tehnologiei in spatii restrinse.

- La utilizatorul final factorul uman - aplicabilitatea noii tehnologii are efect direct cesterea calitatii vietii in sensul eliminarii inreruperilor utilitatilor de apa calda menajera, apa rece si agent termic de incalzire.

Bibliografie

1. Draghici, Ioan (coord.), 1981. *INDRUMAR DE PROIECTARE in constructia de masini.* Vol.I, II, III. Bucuresti: Editura tehnica.
2. Botez, E. s.a. *Masini- unelte.* Vol. II. Editia a doua. Bucuresti: Editura tehnica.
3.Volintiru, T. si Gh.Ivan, 1974. *Bazele tehnologice ale prelucrării elastomerilor.* Bucuresti: Editura tehnica.
4. Cristea, Viorel s.a. 1973. *Etansari.* Bucuresti: Editura tehnica.

Documentatii tehnice ale firmelor de specialitate

5. Catalog elemente de etansare, firma Simrit
6. Catalog elemente de etansare, firma Merkel
7. Catalog elemente de garnituri hidraulice, firma Trelleborg.

UPDRAFT GASIFIER FOR WASTE BIOMASS VALORIFICATION

Authors: Ph.D.Eng. Pasculete Elisabeta, Dipl.Eng. Condrea Florentina, Dipl.Eng.Mihai Macavescu S.C. OVM ICCPET S.A. , Rahovei avenue, no. 266-268, Phone: 0040 21 405.77.50; Fax 0040 21 405.77.77, Postal Code 0138, OP 69 Bucharest, Romania

ABSTRACT

As a readily renewable fuel, biomass may become a significant component in the global sustainable energy mix as fossil fuel resources begin to deplete. In addition, biomass utilization can expedite mitigation of greenhouse gas emissions and carbon sequestration cycles and promote "green" industries with associated growth in rural economies. Biomass integrate a variety of resources, including wood materials and also, wastes resulted from industrial processes of processing the timber, energetic crops, agricultural and agroalimentary wastes, natural manure and organic parts from municipal solid wastes, wastes from individual farms and mud from waste waters.

The gasification process in general is used to convert many chemical compounds that contain carbon such as wood waste and agro-residues, to a syngas that is made up of carbon monoxide and hydrogen. One of the uses of this syngas is as fuel to produce steam or electricity. Another use is as a basic chemical building block for many users in the petrochemical and refining industries. Gasification raises the value of low-value feedstocks by transforming them to marketable products and fuels.

The paper describes the performance and operational experience on an high efficiency, low tar, waste biomass gasifiers developed at OVM –ICCPET , in the field of low environmental impact energetic equipments using biomass waste. There are presented two gasifiers realized within national research projects , one of 100 kw $_{th}$ and the second of 300 kw $_{th}$ producing combustible gas usable in thermal purpose, respectively hydrogen rich one.

KEY WORDS: waste biomass; gasification; combustion gas; hydrogen

1. INTRODUCTION

The main environmental advantage of using biomass waste for energy production consists in reducing the polluting elements associated with conventional energy production.

Gasification of solid fuels is a method of converting them to (gaseous and, to a lesser extent, liquid) fuel products, that can be used either as "clean" fuels (achieving low pollutant emission levels and increased energy efficiency) or as feed-stock, primarily to the chemical industry (synthesis gas). In order to achieve the gasification of solid fuels, heating them at high temperatures in the 900-1300°C range is required, in the presence of a suitable gaseous gasification agent (in most cases steam or -more rarely- carbon dioxide or hydrogen), the pressure being either ambient or elevated up to several decades atmospheres [1-3].

The combustible gas mixture, known as “producer gas”, typically contains carbon monoxide (20% - 22%), hydrogen (12% - 15%), nitrogen (50% - 54%), carbon dioxide (9% - 11%) and methane (2% - 3%).

The overall thermal efficiency of this process is more than 75%.

The producer gas has relatively low calorific value, ranging from 1000 to 1100 kcal/Nm^3 (5500 MJ/Nm^3).

Depending on the way of heating, gasification methods can be classified as: autothermal, allothermal and cycling.

Depending on the contact gas solid there are four methods: fix bed, fluidized bed, circulating fluidized bed and molten metal.

Depending on the ways in which the gasifying agent enters the gasifier for fix bed there are four methods: updraft, downdraft, crossdraft and two stage gasifier.

Depending on the gasification medium: air, oxygen, steam, steam-air, steam-oxygen and hydrogen.

Depending on the used raw material: coal, biomass, oil coal, organic waste.

Depending on the heat support: direct contact, autothermal, cyclic, (using heat bearer, through contact surface, serpentry, coating).

The mixed gas production has crossed a series of development phases that consist in:

- mixed gas production in revolving grate reactors;
- mixed gas production in reactors of the first generation : Lurgi, Winkler, Koppers-Totzek.
- mixed gas production in reactors of the second generation . These reactors represent developed versions of the 3 processes in the first generation , as well as reactors using first generation hybrid processes of those or embedding the reactors where the processes of gas production takes place in phases.
- mixed gas production in reactors of the third generation . These reactors that operates as allothermal reactors receive energy from nuclear reactors, by recovery.

The new concept of biomass gasification installations are gasification concepts, different from those which characterize the common gasifier already on the market and which have been first developed for coals gasification.

The researches in the gasification field in OVM – ICCPET have started about 35 years ago.**1. For the process research the following actions were performed**:

- defining the self-thermal gasification process parameters of the different types of coals (lignite, non-agglutinant pitcoal, soft coal) by tests performed on a laboratory installation;
- fluidized bed gasification simulation program;
- researches on a agricultural biomass gasification plant - fuel gas usable in an internal combustion engine (developing researches);
- research regarding the chemical processing of the gaseous products obtained by co-gasification producing high methane content gas, used as urban gas;
- research of energetic use of biomass/coal produced gas by allothermal co-gasification, in fluidized bed, 100 kW using thermal pipes (developing researches).

2. Conception, design, construction and testing of:

- based on own research results, design drafting for four reactors with 1600 – 2500 kcal/h in revolving grate using lignite
- a gasification unit of 0,1 MW_{th} in fluidized bed with steam and air as gasification agent, running at 2 bar pressure using high content of ash and moisture coals, but with high reactivity;
- a gasification unit of 1,2 MW_{th} in fluidized bed with steam and air as gasification agent, running at atmospheric pressure and pneumatically coal supplied;
- a gasification unit of 1,2 MW_{th} in fluidized bed with steam and oxygen as gasification agent, running at 6 bar pressure. A 90% H_2 + CO + CH_4 content gasifier gas was obtained;
- designing theme for a demonstrative industrial 10 MW_{th} installation of fluidized bed gasification under pressure (10 bar);
- agricultural biomass gasification plant - fuel gas usable in thermal purposes - 300 kW_{th}.

2.OVM - ICCPET TECHNICAL SOLUTION FOR BIOMASS GASIFICATION LABORATORY INSTALLATION

Based on the analysis of the principals types of gasification processes (figure 1) as well as the possibilities applicable to a large range of agricultural and wooden biomass, **OVM – ICCPET** has adopted its own technical solution

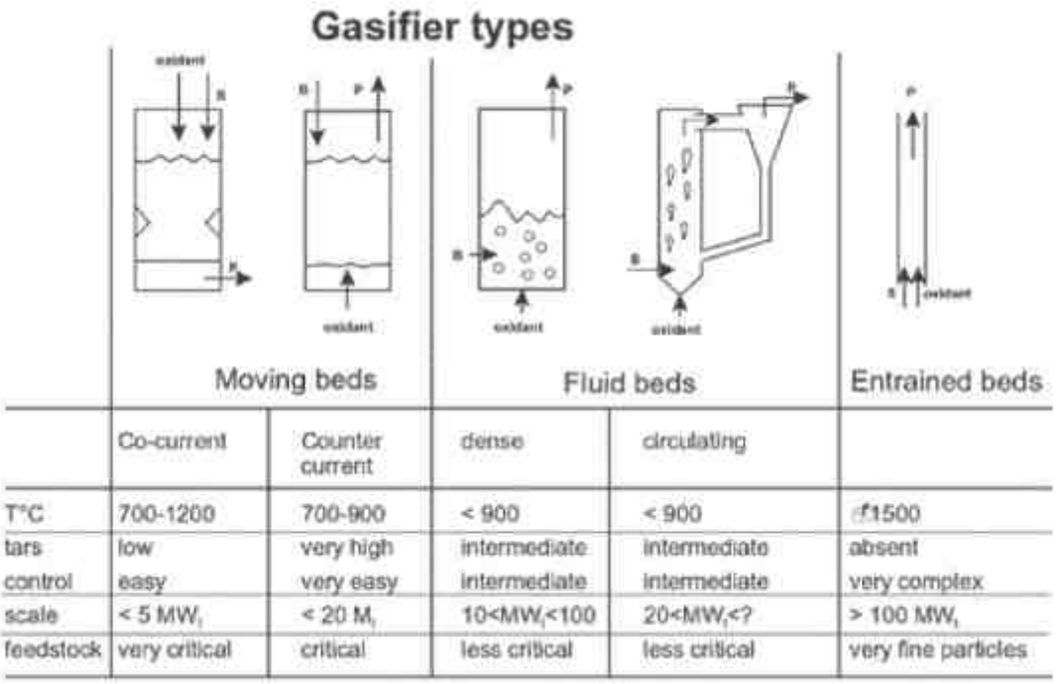

Figure 1. Diagram of principal gasification methods:
a) fix bed; b) fluidized bed; c) entrainment bed

OVM – ICCPET solution:

a) fixed bed gasifier : i) the material particles have no relative movement one towards the other; ii) the bed crosses up to down the reactor through different temperature areas where the processes take place: drying, pyrolysis, reduction, oxidation; iii) the gasification agent is introduced at the bed's base and the resulted gas crossing the gasifier down to up;

b) this type of process has the disadvantage of pyrolisis sub-products appearance (tars, phenols) in the gasifier gas, condensable volatile products on the way, a version of fixed bed.

Thus the reversed fixed bed was chosen: i) the material circulates in parallel flow with the gasifier gas; ii) the resulted volatile substances in the material pyrolysis area are cracked in the oxidation area. The reversed bed term aims the reactants circulation meaning, modified toward the one of the fixed bed as well as the oxidation and reducing areas reversing.

The advantages of the OVM-ICCPET solution:

- fix bed downdraft gasification method is a very simple;
- reliable one and the installations based on this method, are easy to operate;
- the gasogene gas has a low content of tar.
- the moisture level of the material, required by this method is properly to the natural dried agricultural waste, which does not make necessary an additional technological stage;
- the content of solid particles in gas is significantly reduced in relation with the gas resulted from the fluidised bed gasifiers.

Figure 1. Diagram of principal gasification methods:
a) fix bed; b) fluidized bed; c) entrainment bed.

3. GASIFIER FOR THE AGRICULTURAL BIOMASS IN ORDER TO OBTAIN A FUEL GAS USABLE IN THERMAL PURPOSES.

The gasifier using air as gasification agent, was designed and constructed to recycle various types of agricultural waste. The gas is considered poor and can be used to produce warm air and domestic hot water. This gas was used as fuel into a furnace for a seeds drying plant while this is operating one spring and one autumn month and as fuel into the boiler of a administrative buildings of a large private farm (600 ha) for production of hot water.

3.1. Raw material

The used raw material (figure 2) in the experimental gasification unit is the agricultural waste from crop harvesting at the farm of 600 ha with corn and sunflower cultures. Table 1 presents the tehnical si elemental analysis of used biomass [4]. The raw material is grinded in the harvesting process and then is stored. While storage takes place their natural drying.

Table 1. Technical and elementary analysis of corn stalks

No.	Specification	U.M.	Initial state	Comb. mass
1	Total moisture	%	11.00	-
2	Ash	%	1.11	-
3	Volatile matter	%	71.85	81.75
4	Carbon	%	42.48	48.33
5	Hydrogen	%	5.49	6.25
6	Oxygen + Nitrogen	%	39.88	45.37
7	Sulphur	%	0.04	0.05
8	Superior heating value	Kcal/kg	4008	4561
9	Inferior heating value	Kcal/kg	3610	4108

Figure 2. Raw material: Corn cob

3.2. The installation for agricultural biomass gasification contents the following components (figure no. 3,4):

? feed hoper
? gasifier, composed by: drying body; pyrogenation body; oxydo – reduction body; grate; ash collector
? cyclone;
? connection cyclone-gasifier section;
? exhausting gas equipment ;
? the furnace of the cereals drying agent production unit;

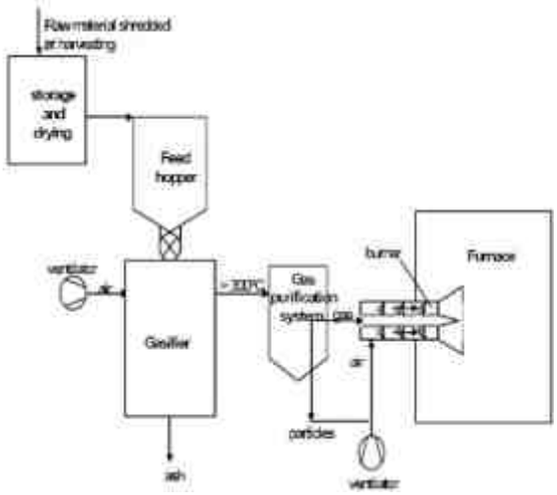

Figure 3. The gasification unit scheme of the agricultural waste

Figure 4. The gasification experimental plant

3.3. The technical solution for burning unit

An updraft -type gasifier can be easily fitted to a circulating-type dryer. A gasification fuel burner was designed for utilising farm wastes as heat source for drying cereals. This burner can be operated easily by the farmer, easily maintained and repaired. Because of the low calorific value of the gas and the burning characteristics of the cereals drying unit, it was chosen the solution with swirl burner with tangential admission of the air into the body of the installation, the devices for intensifying the swirling of air and air-gas mixture (directing palettes at the entrance of the air into the burner unit and at the exit of the air-gas mixture from the burner) and devices for flame stabilization (non-streamlined ceramic element at the exit of air-gas mixture from the burner).

Because of low pressure of the outlet gasogene gas, it was decided to execute an ejector for gas admission: the necessary air for the burning process has a proper pressure and the velocity ensured by the air ventilator and the construction of burner itself.

3.4. Technical characteristics of the gasification unit of the waste agricultural biomass

Thermal power ..... P_t = max. 300 KW
Gas flow ..... Q_{gaz} = max. 75 Nm^3/h
Calorific value of gas .....Q^I_I = 4,074 MJ/Nm^3
Gas compozition H_2 = 14,2%; CO =16,8 %; CO_2 = 15%; CH4 = 0,8%; O_2 = 7,8%; N2 = 45,2%
Exit gas temperature .....150-200°C
Agricultural biomass flow … D_{bio} = max. 40 Kg
Inlet biomass moisture…… 10 – 11 %
Maximum size of the shredded biomass..... ....50 mm
Air flow for the gasification process …… .... 40 Nm^3/h
Air temperature…… Enviroment temperature

3.5. Results. Tests for agricultural biomass gasification were performed. The operating parameters of the gasifier were been measured and stored with an aquisition and storage data system especialy created for this purpose. During the tests 4-6 gas samples were taken for each temperature level. Table 2 shows the test results. Only the most representative results are presented.

4. GASIFIER FOR HYDROGEN RICH GAS GENERATION

Biomass is considered as a viable alternative solution for hydrogen obtain, intending the intensification and extension through modern technologies and equipments of biomass use. Biohydrogen is the same as hydrogen except it is produced from a biomass feedstock. This is done using gasification of the biomass and then reforming the produced methane, or alternatively, this might be accomplished with some organisms that produce hydrogen directly under certain conditions. Hydrogen or hydrogen-rich gas produced from biomass could be readily used in most of the present natural gas or petroleum derived hydrogen energy conversion devices and also in advanced systems such as fuel cells to produce electricity.

Hydrogen is currently produced in large quantities via steam reforming of hydrocarbons over a Ni catalyst at ~800°C. This process produces a syngas that must be further processed to produce high-purity hydrogen. The syngas conditioning required for steam reforming is similar to that which would be required for a biomass gasification derived syngas; however, tars and particulates are not as much of a concern. To raise the hydrogen content, the product syngas is fed to one or more water gas shift (WGS) reactors, which convert CO to H2 via the reaction: $CO + H_2O \rightarrow H_2 + CO$.

Nr.crt.	Specification	U.M.	1	2	3	Average
1	CO_2	%	15	14.5	15.5	15
2	C_nH_{2n}	%	0.3	0.1	0.2	0.2
3	O_2	%	7.0	8.0	8.4	7.8
4	CO	%	15	17	18.4	16.8
5	H_2	%	14.00	14.6	14.00	14.2
6	CH_4	%	1.00	0.8	0.6	0.8
7	N_2	%	47.7	45	42.9	45.2
8	Q_i	Kcal/m³N	946	985	988	973

Table 2
The average composition of the gas obtained through the agricultural waste gasification

The gas stream leaving the first WGS stage has a CO content of about 2%; in a second stage this is reduced further to about 5000 ppm. The remaining CO can be removed by a pressure-swing adsorption (PSA) system.

OVM ICCPET realized an experimental gasification laboratory plant and effected gasification tests for determination of the process parameters influence on the raw gas enriched in hydrogen obtained through biomass gasification. It has been effected gasification tests for various biomass wastes [5-7].

4.1. The gasification unit of biomass is composed by the following equipments (figure 5, 6):

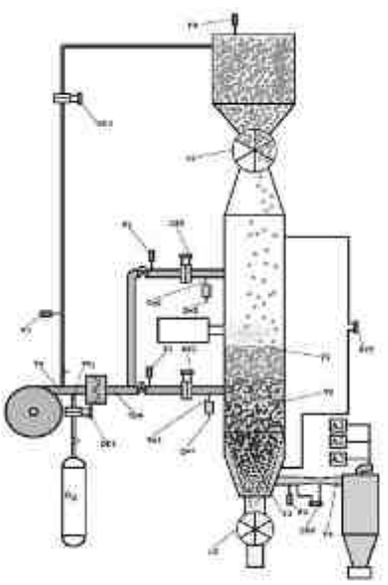

Figure 5. The technological schema of the biomass gasification experimental installation

Figure 6. The Gasification Pilot Plant

- Biomass bunker -has a capacity of about 250 kg.
- Biomass dosing feeding system is driven by a 24 V DC engine powered y an adjustable source order to ensure the necessary speed.
- Gasification reactor consisting of: drying zone (area); oxidation and pyrolysis zone; air, steam distribution section; reduction zone ; gas/solid separator composed of two cone parts.
- Cyclone
- Dosing ash evacuation is driven by a 24 V DC engine.
- The steam feeding system is made of a pipe heated by an electric resistance. Water is pumped by an adjustable peristaltic pump, evaporated and heated at an adjustable temperature.
- The air/oxygen mixture feeding system assures the necessary air/oxygen preheated at an adjustable temperature controlled the same way as the steam.
- Oil burning starting system assures the process ignition and is stopped after the biomass firing.
- Air flows are calculated by measuring the pressure drop from diaphragms, air pressure and temperature. All the transducers are powered by a 24 V DC fix source.
- The data acquisition system consists of analog-digital convertors with 4-20 mA input, 12 bits output. The system is connected to a computer by a RS232 comunication system. The aquired data are shown on the screen in numerical and graphical form and stored in an EXCEL compatible file through a dedicated software.The gas analysers: TESTO 350 XL is endowed with a CO_2 infrared cell and a dilution module in order to increase the CO measurement range; 500 Model is a hydrogen analyzer; GA 2000 is a biogas analyser (CO_2, CH_4, O_2).

4.2.Feed stock

The gasifier was tested with two types of wooden and agricultural waste biomass: deciduous tress sawdust; and sorghum (figure 7). These were characterized (Table 3 – 4) by: the technical analysis, the elementary analysis, the heating value.

Figure 7. Beech and sorghum pellets

Table 3.
Fresh cropped deciduous tress and sorghum sawdust analyse

No.	Constituent	Symbol	Unit	Values	
				Fresh cropped deciduous tress	Sorghum
1	Moisture	W^i	%	58,35	64,22
2	Ash	A^i	%	0.90	2,04
3	Carbon	C^i	%	22.68	17,82
4	Hydrogen	H^i	%	2.34	2,24
5	Nitrogen	N^i	%	0.60	0,69
6	Oxygen	O^i	%	15.13	12,99
7	Sulphur	S^i	%	traces	traces
8	Higher heating value	Q_s^i	Kcal/Kg	1960	1,987

Table 4.
The technical and elementary analysis of the pellets used in the gasification experiments

No.	Constituent	Symbol	Unit	Beech wood sawdust pellets	Sorghum pellets
1	Moisture	W^i	% gr.	16,20	17,00
2	Ash	A^i	% gr.	1,80	4,80
3	Carbon	C^i	% gr.	45,60	41,30
4	Hydrogen	H^i	% gr.	4,70	5,20
5	Nitrogen	N^i	% gr.	1,20	1,60
6	Oxygen	O^i	% gr.	30,50	30,10
7	Sulphur	S^i	% gr.	traces	traces
8	Higher heating value	Q^i_s	kcal/kg	3945	3718
			kJ/kg	16517	15560

4.3Characteristics of gasification installation

Gasification reactor dimension	Φ200x1300 mm
feed stock:	wooden and agricultural biomass pellets with diameter of 4-10 mm;
gasification agent:	steam and air enriched in oxygen;
Biomass medium capacity:	25 kg/h
Maximum steam flow	4 kg/h
Electric power demand	15.5 kW
Oil burner power	10 kW
Gasification temperature	830- 900 °C
Preheated air maximum temperature:	350°C
Output thermal power	100 kW
Air capacity respectively air enriched in oxygen	33 Nm^3/h
Overheated steam capacity	3 kg/h;
Gas flow	1.8- 2 Nm^3/kg biomass
Working pressure	atmospheric.

4.4. Result and disscusion

1) The experiments aimed to establish the functioning conditions of the gasification reactor and to determine **the influence of the gasification agent composition** on the gasifier gas quality. The gasifier gas was drawn and analyzed every 30 minutes along one experiment.

- The increase of the oxygen content in the gasification agent leads to the increase of the compounds content that gives heating value to the gasifier raw gas: CO , H_2 , CH_4.
- In the same time, we noticed the increase of the carbon dioxide content in both cases.

In table 5 the obtained gas composition is presented synthetically for different compositions of the gasification agent by medium value of the most representative tests.

Table 5. Experiments' results for the different gasification agents; the feedstock used –deciduous trees sawdust (1)/ and sorghum (2) pellets; *)dry gas composition

Gasification agent O_2 / N_2	COMPOSITION AND GAS* HEATING VALUE													
	CO_2		CO		CH_4		O_2		H_2		N_2		Heating value kcal/Nm^3	
	deciduous trees	sorghum	deciduous trees	sorghum	deciduous trees	sorghum	deciduous trees	sorghum	deciduous trees	sorghum	deciduous trees	sorghum	deciduous trees	sorghum
21% O_2 79 % N_2	10,9	10,6	21,0	20,5	1,8	1,4	0,9	0,2	26,3	25,1	39,1	42,2	1331	1257
	17,8	18,3	34,0	35,5	2,8	2,3	1,4	0,3	44,0	43,6	0	0		
24,95 % O_2 75,05 % N_2	12,5	12,0	22,1	21,4	1,8	1,5	0,7	0,3	26,9	25,9	36,0	38,9	1376	1312
	20,1	19,6	35,8	35,0	3,0	2,5	1,1	0,5	40,0	42,4	0	0		
28,90 % O_2 71,70 % N_2	14,1	13,8	23,3	22,0	1,9	1,6	0,2	0,2	27,5	26,4	33,0	36,0	1433	1355
	21,0	21,4	34,7	34,3	2,8	2,4	0,3	0,3	41,2	41,6	0	0		
36,90 % O_2 63,10 % N_2	16,1	15,8	24,6	23,7	2,0	1,7	0,6	0,3	30,2	29,6	26,5	28,9	1538	1476
	21,7	22,1	33,0	33,4	2,6	2,3	0,7	0,4	42,0	41,8	0	0		
44,70 % O_2 55,30 % N_2	18,1	17,8	25,7	24,9	2,1	1,8	0,4	0,2	32,7	32,1	21,0	23,2	1638	1578
	22,9	23,2	32,8	32,4	2,7	2,4	0,5	0,3	41,3	41,7	0	0		
66,50 % O_2 35,50 % N_2	18,7	18,3	29,7	28,8	2,5	2,2	0,2	0,5	37,5	37,0	11,3	13,2	1899	1834
	21,1	21,1	33,5	33,2	2,9	2,5	0,2	0,6	42,3	42,6	0	0		

2. Regarding the **influence of the temperature on the gasification process,** respectively on the produced gas composition, in table 6 the compositions of the gasogene gas obtained in the process at different working temperatures are presented
(ex. figure 8).

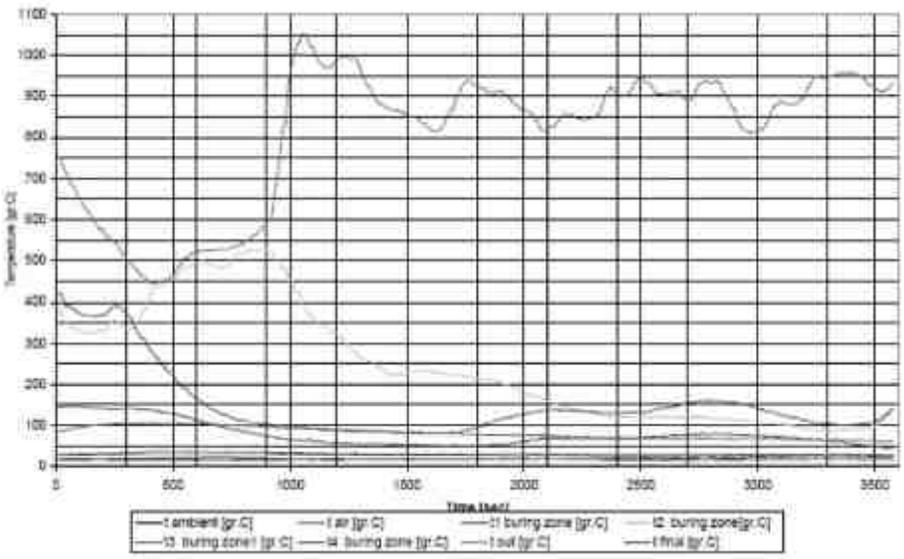

Figure 8. The temperature evolution during biomass gasification process

Table 6. The results of the gasification experiments regarding the influence of temperature on the obtained gas composition. Raw material: sawdust pellet. team capacity: 3kg/hour

Temperature [1](°C)	Gasification agent (%)		Gas composition %					Gas heating value kcal/Nm³
	Oxygen	Air	H_2	CO	CH_4	CO_2	N_2	-
860	50	50	37,6	33,7	2,5	13,3	12,9	2105
925	50	50	38,5	34	1,6	11,1	14,8	2163
940	50	50	38,9	34,9	1,2	10,8	14,2	2170

1) Medium values for the respective system.

The high temperature influence: the increase of CO and H_2 components share while the CH_4 content easily decreases, accordingly, the increase of the obtained gas heating value.

The movement to the right of the water gas forming reaction equilibrium and of the Boudouard reaction equilibrium can explain the increase in the CO and H_2 content and, in the same time, the decrease of the CO_2 content.

$$C + H_2O \quad CO + H_2$$

$$C + CO_2 \quad 2CO$$

The gas composition obtained at temperatures under 850°C was inadequate from the point of view of the components that interest, CO and H_2 respectively.

In the figures 9 and 10 the obtained gas composition is presented, at sawdust beech, respectively sorghum gasification, at process temperatures of 875- 950°C **for different oxygen concentrations** in the gasification agent. The nitrogen diminution in the gas, takes place in the same time with the increase of the other gaseous components.

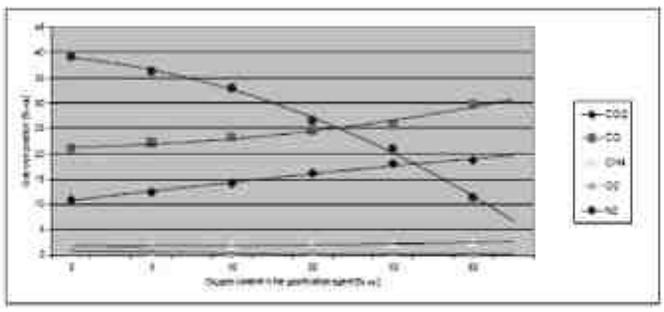

Figure 9. The variation of the gasogene gas composition according to the oxygen content in the gasification agent for beech sawdust gasification.

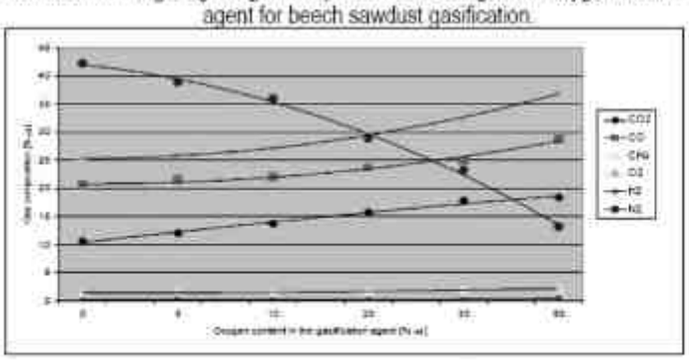

Figure 10. The variation of the gasogene gas composition according to the oxygen content in the gasification agent – (sorghum gasification)

5. CONCLUSIONS

The technologies "energy from wastes" and “biomass for energy" are the only renewable energy resources that directly compete with fossil fuels, therefore the coming developments in innovating processes, technologies and systems might support biomass to penetrate the solid fuel market. The agricultural and/or wooden biomass gasification for the generation of treatable gas in order to generate combustible gas or hydrogen rich gas is worldwide level a process to be researched at the pilot and demonstrative level. One of the processes of gasification applicable to a raw stock that does not raise special issues regarding the installation feeding is the fixed bed process that, if modified by reversed bed, also solves the issue of condensable volatile substances in the gas subject to the treatment subsequent phases. The tests performed at laboratory plant **The tests conducted at OVM ICCPET on the 100 kW$_{th}$ and the 300 kW$_{th}$ gasifiers system at varying load conditions,** for wooden and/or agricultural biomass gasification, **has** have proved the feasibility of the adopted technical solutions referring to the used equipments and materials **indicated**.

The gasification laboratory plants has presented a stable operational manner, fact that contributed also to the results' reproductibility.

6. REFERENCES

1. Francis Lau, 2001, “ Biomass Gasification, a Sustainable Clean Energy Source,” Paper presented at the USChina. Clean Energy Technology Forum, Beijing, China, August 29-31, 2001
2. Basagianis A.C., Vergkios X.E. – “Production of hydrogen from biomass via steam reforming of bio-oil”, Proceeding International Hydrogen Energy Congress and Exhibition IHEC, 2005, Istanbul.
3. Tsamba Alberto Julio – “Biomass Gasification for Sustainable Development”, exergy.se/goran/hig/ses/01/biomass.
4. E. Pasculete, F. Condrea Realizare prototip experimental de gazeificare °i teste de punere în funcpiune, cod 2016/2-S1-2005, 2005, Bucureº ti
5. E. Pasculete, F Condrea, Cercetari in vederea pregatirii bazei materiale pentru teste si experimentari de gazeificare, purificare gaz, separare si stocare hidrogen, Lucrare SC OVM ICCPET SA, Cod 84/2-S1-2006, iulie 2006.
6. E. Pasculete, F. Condrea, Experimentarea solutiilor privind pregatirea si gazeificarea biomasei, prelucrare gaz brut, separare si stocare hidrogen, Lucrare SC OVM ICCPET SA, Cod 84/3-S1-2006, noiembrie 2006.
7. E. Pasculete, F. Condrea, Cercetari pentru definitivarea pe baza experimentala procedeelor, metodelor, tehnicilor optime de obtinere de hidrogen prin gazeificarea biomasei, Lucrare SC OVM ICCPET SA, Cod 84/4-S1-2007, mai 2007.

TECHNOLOGICAL TRANSFER AND INNOVATION PARTNERSHIP FOR THE REINFORCEMENT OF THE MINERAL RESOURCES ECONOMIC SECTOR IN SOUTH-EAST EUROPEAN COUNTRIES

TRANSFER TEHNOLOGIC SI PARTENERIAT DE INOVARE PENTRU CONSOLIDAREA SECTORULUI ECONOMIC AL RESURSELOR MINERALE IN TARILE EUROPEI DE SUD-EST

Eng. Radu JECU* & Eng. Ioana-Carmen POPESCU** (Ph. D. Candidate)

**Technological Information Centre for Mineral Resources CIT-CENTIREM,*
***Research and Development National Institute for Metals and Radioactive Resources INCDMRR Bucharest - Romania*

Abstract
Considering the mineral resources current sate in Romania and the global and European political and economic situation, the Technological Information Centre for Mineral Resources CIT-CENTIREM an integrant part of National Network for Innovation and Technological Transfer ReNITT - and compartment of the Research and Development National Institute for Metals and Radioactive Resources INCDMRR Bucharest - Romania proposes the creation of a regional partnership in technological transfer and innovation for South-Eastern Europe in order to solve the problemes faced by the mineral resources sector.

1. Brief presentation of the Technological Information Centre for Mineral Resources CIT CENTIREM

The Technological Information Centre for Mineral Resources CIT CENTIREM is an autonomous entity without juridical personality, constituted inside the Research and Development National Institute for Metals and Radioactive Resources INCDMRRR Bucharest Romania. As a member of the National Network for Innovation and Technological Transfer ReNITT, it acts for the sustainable economic and social development of the Romanian mineral resources sector by creating and developing the innovative framework, which introduces the total quality system and human resources development and provides the full access to the technological performance. The setting up of the centre constituted the main target of a project financed by MENER Programme - a part of the First National Research, Development and Innovation Plan, according to the contract no.021/2001.

The main objective of the project was to provide technological services and facilities in order to promote the competitivity increasing and the sustainable economic development of the mineral resources sector in Romania, by the foundation and setting in operation of an organization for technology transfer in the field - Innovation and Competitivity Centre for Mineral Resources CENTIREM. The mission of this entity was defined by the development of the technological information activities for rhe economic agents, knowledge transfer and quality management in order to increase the competitivity of the enterprises working in the field of mineral resources.

The main activities carried out by CENTIREM between 2001-2004 within the project's framework were as follows:

- elaboration and tutoring of the training course intitled “Fundamentals of innovation and technology transfer in mineral resources” at the Faculty of Geology of the University from Bucharest. It was published by Electra Publishing House from Bucharest.

- design of a magazine on innovation and competitivity in mineral resources field - entitled "Bulletin CENTIREM", respectively elaboration of the business plan and issuing its first number in October 2003.
- technical programme to create and set in operation the CENTIREM's website, www.centirem.ro .
- elaboration of a data bank named CEOFREM, which was focused on the achievement of a virtual market for products, services and technologies in the field of mineral resources, where the buyers and sellers were able to meet, negotiate and do commercial transactions.

The CEOFREM data bank was conceived as an integrated „business to business" collaboration platform, where the subscribed members, such as firms, companies, organizations, experts to share interests and cooperate on-line. In order to achieve this data bank, CENTIREM performed an inquire on research marketing, a documentation concerning the cooperation and business opportunities and became member of World Trade Point Federation.

On 2004 Research and Development National Institute for Metals and Radioactive Resources INCDMRRR has initiated the legal procedure to certify CENTIREM as an entity of the national infrastructure for innovation and technologic transfer. The Certificate no. 7/01.07.2004 was released following the Education and Research Minister's Order no.414109/28.06.2004 and from now on CENTIREM was authorized to work as a centre for technological information named CIT CENTIREM.

On October 2004 CIT CENTIREM participated on the competition launched by the National Programme for support of innovation and technological transfer infrastructure INFRATECH, with the project entitled: "Development of CIT CENTIREM's infrastructure". As winner of this competition, the project allowed the development of the infrastructure of rhe centre between 2004-2005 in order to achieve technological services projects.

According to the Decision no. 9116 / 26.10.2005 released by the President of the National Authority for Scientific Research CIT CENTIREM was authorized for 5 more years as entity of national infrastructure for innovation and technological transfer.

On 2005 CIT CENTIREM submitted a project proposal entitled "Technological Services for Mineral Resources INFOREM", which was declared winner on 25.10.2005.

2. An overview of mineral resources field's current state

The mineral resources exploitation activity in post communist Romania known a significant decreasing of its volume followed by the output diminution and unemployment increasing.

The mining perimeters became poverty poles and were declared under-privileged zones.

Despite the fact that the sub-branches divergently evolved the extractive industry still remains among the stagnant branches of the national economy.

Under this context the mineral resources industry owns a low internal competitivity and productivity, determined by the low reliability of some equipments and setups beside the non-correlation of their capacities within the flow sheet and the power-consuming feature of the activity.

The negative evolution of mining sector is explained by the depletion of resources as well as the exploitation depth's increasing, which determines the low yield of the activity, including losses, which claim financial support form the state budget.

Presently the main condition to increase the quality and efficiency of mineral resources industry is represented by the elimination of technological gaps as the material endowments and development of informational and technological transfer infrastructure concerns in order to develop the absorption capacity for the scientific and technological knowledge and of innovation capacity in the economic field.

The research and development activity in mineral resources field had a negative dynamics beginning with 1995. The reduced number of research scientists active in this area speaks for itself.

The low financial support on the state's behalf determined the migration of research scientists in other fields of activity and the RDIs units technical endowment's obsoloscence. RDI activities in the mining sector and for mineral reosurces's capitalization are carried out only in some universities or commercial societies with private capital.

Some relatively recent experiences from some mining exploitations point out that the existent resources still own a high exploitation potential in effective conditions by providing the access at new exploitation technologies and procedures, which may be stimulated by the development of some elements of industrial and RDI infrustructure elements.

Drastic decreasing of RDI's contribution to the modernization of the mineral resources industry determined among others the decreasing of: RDI results' dissemination, technological transfer weight, development of required infrastructures.

As a consequence, only a few enterprises launched in production new technologies and products. Now the main concerns of the RDI units are related on increase the quality and efficiency of the mineral resources industry, respectively to reduce the technological gaps and to develop the informational and technological transfer infrastructures in order to increase the absorption capacity for technical and scientific knowledge by economy as well as to enlarge the innovation potential in this field. The conservation, closure and ecological reconstruction of areas affected by mining activity are also important objectives for the RDI entities.

3. Representative mineral resources fields and specific problems

The mineral resources field from Romania is mainly focused on exploitation of copper, lead, zinc, gold, coal, uranium and industrial minerals.

The mineral resources and the areas from which they are extracted are described as follows:

- **Copper** is mined mostly in two districts: the north-west, from mines in Baia Mare, Baia Sprie, Cavnic and Lesul Ursului, and the south-west, from major mines at Moldova Noua, Rosia Montana and Rosia Poieni. The ore grade is generally low, with the major producing mines (Moldova Noua and Rosia Poieni) containing ore grading only about 0.35% of Cu or less. Concentrates from these areas are smelted and refined at Baia Mare and Zlatna.
- **Lead** and zinc are produced from underground mines in the Baia Mare, Baia Borsa, Certej, and Rodna districts. They are low-grade ores, grading 0.4-1.0% of lead and 0.6-1.2% of zinc, with associated copper (0.35%), antimony, bismuth, cadmium, gold and silver. Due to the complex mineralogy of the lead and zinc ores, concentrates produced from them are uneven. Metal recovery in concentrate ranges between 50% and 75% for lead and zinc.respectively. The smelting and refining of lead and zinc from domestic and imported ores and concentrates are carried out at the Imperial Smelter at Copsa Mica and at the Romplumb SA Smelter at Baia Mare.
- Romanian **gold** resources are mainly concentrated in Transylvania's Golden Quadrilateral, a major gold-mining region comprising the cities of Baia de Aries, Brad, Sacarimb and Zlatna. Gold production in this region was reported to be about 140,000 ounces in 1996. The Rosia Montana opencast and the Brad underground gold mines belong to the joint venture between Gabriel Resources of Canada and the state-owned mining company MINVEST S.A. Deva. Feasibility studies on developing the Rosia Montana mine and reprocessing tailings from both mines have been undertaken. Rosia Montana's output is reportedly between 10,000 and 12,000 ounces per year. The gold deposits at Cetate and Carnic were evaluated at 45 million tons of ore, graded 1.7 g/ton of silver and 2.46 million ounces of gold.

Another potential area for gold exploration is the Bucium intrusive complex in the Metaliferi Mountains. Since 1999, the Australian-Romanian joint venture company Aurul SA (now SC Transgold SA) has processed gold from old tailings in the Baia Mare region.

The precious metal treatment plant is designed for a throughput capacity of 2.5 million tons per year.

- Major **coal** deposits are located in the Jiului valley, with recoverable coal reserves estimated at 3,980 million tons in 1996. Parallel to the overall economic slump, coal production has experienced a sharp decline in recent years. Less than 10% of the coal produced in Romania is bituminous and the remainder is lignite coal.

- Prospecting for **uranium** in Romania was initiated in the 1950s. Since then, some 13 deposits and 9 occurrences have been discovered in three major uranium provinces: the Western Carpathians (Apuseni Mountains), the Banat Mountains and the Eastern Carpathians. The Apuseni and west Banat Mountains have a good uranium potential, since they include the deposits of Bihor and Avram Iancu, and Ciudanovita, Dobrei and Natra, respectively. Rocks in the Eastern and Middle Carpathians, such as Crucea, Botusana and Tulghes, also host uranium deposits.

Underground mining technology has been used in all of the deposits, with the exception of the Banat Mountains deposits, where opencast mining was used. The extracted ore used to be shipped abroad for processing, as there were no such facilities in Romania. Many uranium deposits are now depleted, as, for example, the high-grade Baita Bihor (1.13-1.26% of U), Ciudanovita, Dobrei North and Nastra deposits.

A total of 15,557 tons of uranium of known conventional resources is reported from ores with an average uranium content of 0.11% of U, and 4,970 tons of U of hidden resources. Three mining plants are in operation: E.M. Banat, E.M. Bihor and E.M. Crucea. In 1997, they produced 150,000 tons of ore, with an average mining recovery of 80%.

According to estimates by the International Atomic Energy Agency (IAEA), Romania produces 100 tons of U annually. In Romania, all uranium-related exploitation activities are carried out by stateowned companies, under the coordination of the Uranium National Company S.A.

- Romania also has an extensive output of **industrial minerals**. Barite, bentonite, diatomite, feldspar, graphite, gypsum, kaolin and limestone among others, are mined at about 50 deposits throughout the Carpathian region. The modernization of Romania's economy and infrastructure has increased the demand for many of these commodities. The privatization of mining companies producing industrial minerals is more advanced than that of other sectors of the mining industry.

Romania has identified the principal areas in the industrial sector, which includes the mining and metallurgical industries, in which urgent action is needed:

- the renewal of existing production units to respond to energy, mineral raw material and environmental constraints;
- the adoption of non-polluting production processes and technologies at the national level;
- support for existing industries through the introduction of emission-reducing equipment and technologies;
- the establishment of a national integrated monitoring system for environmental quality.

The next few exemples will point out the emergency of an effective action plan.

1. Many mining wastewater treatment plants are currently in a bad state, operating manually with obsolete and ineffective technologies. The Herja mine water treatment plant in Maramureº County, which belongs to REMIN S.A., illustrates this situation. It has a simple system featuring three decantation pools with very old decanters and pumps, working with minimum efficiency. The 144 mechanical filters (in wood) are outdated, needing urgent replacement by modern and effective ones.

2. The main environmental issue in coal mining (located in Jiului Valley) is the inefficient treatment of the huge volume of wastewaters due to outdated technology and equipment in the water treatment plants.

3. In Romania (mainly in the Carpathian region), a surface of about 1,000 ha is contaminated with natural radioactive elements. There are over 150 deposits containing 6 million m3 of waste rocks from

uranium mining operations and two tailing ponds containing 6 million tons of waste from uranium-ore processing. Because of the improper environmental management of these sites (located in the Apuseni and Banat Mountains and Eastern Carpathians) a lot of environmental problems occur.

Other inventories of hot spots have been conducted by the International Commission for the Protection of the Danube River (ICPDR) for the entire Danube Basin (Danube Basin Analysis/WFD Roof report 2004), and also for the Tisza river catchment area - the region in which the greatest impact of the mining industry is recorded. According to the ICPDR, there are 53 industrial and mining hot spots in the Romanian Danube river basin, 26 of them being classified as of high priority.

4. Romanian legislation concerning the mining policy

The main strategic document regarding industry in Romania is "The Industrial Policy of Romania" and the "Action Plan for the Implementation of the Industrial Policy of Romania".

Other important policy documents for the industry domain are:

- The Strategy for the Mining Industry for 2004-2010 (approved by GD 615/2004)
- "Romania's revised position paper, Chapter 15 - Industrial policy", through which Romania accepts the *acquis communautaire* on this domain.

The legislative framework comprises:

- Mining Law no. 85/2003
- Norms for applying the Mining Law no. 85/2003
- Petroleum Law no. 238/2004

The modern rules for the management of mineral resources are established through these laws. Obligations are provided regarding ecological reconstruction and the obtaining of environmental agreements/permits, and it is stipulated that such activities cannot be carried out in protected areas.

The government also decided to close unprofitable operations, including state-owned enterprises such as coal-mining companies, and planned to cut subsidies to the mining sector.

The so-called National Companies are enterprises that continue to be owned and operated by the state, but which are able to lease or sell some assets in order to increase profitability. The mining and mineral industries belong to this category.

Also relevant to the industry are:

- Law 645/2002 for the approval of GED 34/2002 on integrated pollution prevention, reduction and control, adopting into Romanian legislation the IPPC Directive and creating a favorable framework for new clean technology transfer (BAT- Best Available Techniques) in the most important sectors of industry/agriculture;
- MEWM Decision no. 1144 / 2002 established the register for emitted pollutants from activities that come under GED 34/2002, art. 3, alin. (1), lit. (g) and (h) on integrated pollution prevention,
reduction and control, and the modality to report them;
- Government Decision no. 189/2002 regarding approval of the introduction of the ecological label.
- Law on Environmental Protection specifically adopts the "polluter pays" principle and the concept of risk assessment. The Law also identifies a national system of monitoring and sets out rules governing water, air and soil quality. Environmental impact studies are required for new projects or for altering existing ones. Also, the Law on Environmental Protection includes sections regarding the mineral industry, describing the obligations on new and former owners to restore environmental quality, and establishing procedures for monitoring the quality of the soil and subsoil, including plans for territorial development, exploratory drilling, geologic and hydrogeologic prospecting, and mining.

Most of the above considerations were incorporated in the National Environmental Protection Strategy and the National Environmental Action Plan (NEAP).

The NEAP was based on the premise that much of the environmental degradation in Romania is the result of inappropriate economic and related policies. It was assumed that market liberalization, privatization and other reforms would penalize the excessive

use of energy and other resources, reducing environmental damage. These gains would be reinforced by the effects of market-driven industrial restructuring, which would shift production from inefficient plants towards more efficient and less polluting ones. Priority areas that the NEAP identified for immediate action were the reducing of emissions of lead and other heavy metals from the mineral industry and the minimization of water contamination by heavy metals and other toxic substances. Nevertheless, the NEAP's implementation has been hampered by delays in launching the economic reforms on which it was based, especially those concerning privatization and market liberalization.

The main obstacle/barrier to environmental friendly industry and energy activities is the fact that the concept of the sustainable management of mineral resources and related mechanisms are not yet well understood in Romania and are neglected by high-level decision makers. It is still assumed that only after economic development and stability have been achieved will it be possible to pay attention to environmental issues such as clean production and investments in environmental improvements.

5. What about the TTI partnership ?

We briefly presented the current state of the mineral resources sector from Romania and the main economic difficulties faced by it. CENTIREM was founded and it is determined to act as a key element with signinficant impact in its specific field of activity. We do consider that the Romanian expertise, the results of the other South-Eastern European countries in industry, RTD and TTI (technological transfer and information) beside the actual economico-political state both continental and global may constitute the premisses for the occurrence of a regional partnership in the field of innovation and technological transfer focused on mineral resources sector.

This partnership aims to constitute an innovation and technological transfer organization/network focused on mineral resources sector in Balkan region.

The main objective of the proposed partnership is to cooperate in order to provide technological services aimed to support the sustainable economic development in the mineral resources field from Sout-Eastern Europe.

Thus the proposed partnership is focused on:

- technical assistance for industrial enterprise at the application of new technologires;
- stimulation of international cooperation, reimbursable and non-reimbursable funds attraction;
- assistance of RTD organizations in their efforts to fulfill the industrial beneficiaries' requirements in the area, for the reasearch results' transfer;
- support of RDI programmes by carring out studies and enquiries concerning science's policy and the mineral resources development strategy;
- increasing the awarness and information degree concerning the innovation, quality, and technological transfer concepts by the development and implementation of educative pregrammes;
- dissemniation actions using ITC technologies and other specific manifestation.

In order to accomplish all these objectives CENTIREM is authorized to perform the following services:

a) Technological information services, technological audit, technological forecasting and awarness.
b) Consulting and assistance services concerning the intellectual property rights' exploitation.
c) Assistance and legal advice services on national, European and international legislation.
d) Assistance services to obtain funds under the framework of some national and international R&D programmes.
e) Identify partners from the academic and research fields.
f) Providing access to specialized databases.
g) Information on the national, regional and local priorities.
h) Services for the organization of conferences, scientific events and specialized exhibitions.
i) Services for editing magazines and specialty papers.
j) Information services on intellectual property.

The CENTIREM's fields of activity are:

a) Information and technological awarness, elaboration of essays, reports, analyses and studies for the technological information of SMEs.
b) Documentation through the access to the data basis, elaboration of specialized reports to support the decisions.
c) Selective or complete translation of works, documentations concerning new technologies or products, scientific papers, etc.

d) Support for refreshing courses, organizing of traning courses on intellectual property and methods of information.
e) Editing of specialized publications, editing and printing of magazines, handbooks, books in the field of technological knowledge.
f) Technological audit, achievement of expertise and technological audit studies for setting of performance and opportunities.
g) Councelling and assisstance for the elaboration of projects C - D, advice on specific methodologies and the technological level of the field.
h) Advice on intellectual property, advice on the exploitation of intellectual property rights.
i) Development of feasibility studies and business plans for investment in SMEs.
j) copies of documentary materials, magazines, etc.., providing xerox services and copies of documentary materials, magazines, brochures, leaflets and others.

The contribution of CENTIREM at the proposed partnership will be focused on the following directions:

- increasing the science and technology information's dissemination potential
- development of informational partnership.
- Increasing the technological documentation degree.
- Increasing the technological absorption potential of economic agents
- Refreshing courses for innovative human resources.
- Increasing of SMEs' number, where new technologies are implemented.
- Total quality managemnt's introduction.
- Development of innovative informational networks.
- Introduction of innovation and technological transfer principles in education.
- Increasing the public information on science and technolgy.

Bibliography:
Emilian Burdusel - **National assessment of the national policy, legislative and institutional frameworks related to the Carpathian convention Romania** (Document produced under the project “Support for the implementation of the Carpathian Convention” financed by the Italian Ministry for the Environment, Land and Sea and implemented by the REC in partnership with EURAC).

HYDRAULIC DRAWING EQUIPMENT FOR THE REFLOATING "TRANSILVANIA" SHIPS
ECHIPAMENT HIDRAULIC DE TRAGERE PENTRU RANFLUAREA NAVEI "TRANSILVANIA"

CONSTANTIN CHIRITA* CORNELIU CONSTANTIN DUCA**
DANIEL CALFA** and ADRIAN CONSTANTIN HANGANU**
* Technical University "Gheorghe Asachi"Faculty of Machine Manufacturing and Industrial Management Iasi, Romania,
e-mail: disahp@disahp.net
** Hydramold Company,Iasi, Romania, e-mail: hydramold@hydramold.com

Abstarct. The refloating operations involves high cost, equipment lifting/ pulling heavy, human effort and also depends on many factors: the depth of the river, the degree of pollution of water, weather conditions, possibilities for the location equipment, refloating methodology. This article presents a complex hydraulic equipment maded by Hydramold for refloating Transilvania ship from Danube river, Comercial Port of Galati.

Key words: refloating ship, hydraulic equipment, drawing, technological

1. Introduction

The refloating naval craft is surgery that aims to raise technological vessels to the bottom of rivers and their restoration afloat or removing wrecks and cleaning of rivers, river for shipping traffic on the sector reinsurance bad.

The refloating operations involves high cost, equipment lifting/ pulling heavy, human effort and also depends on many factors: the depth of the river, the degree of pollution of water, weather conditions, possibilities for the location equipment, refloating methodology etc.

Also, surgery refloating ship is complex because it requires preparation and operations, and namely: the firing of the chains binding wreck, wreckage cutting into two or more segments depending on its length, anchoring equipment drawing etc.

2. The mechanical structure of the hydraulic drawing equipment

2.1. *Technical characteristics*

The technical characteristics of the hydraulic drawing equipment are presented in Table 1.

Table 1
Technical Characteristics

Parameter	U.M.	Value
Maximum working pressure	bar	215
Max/min piloting pressure	bar	100/215
Maximum flow rate	l/min	200
Flow rate at maximum pressure	l/min	112
Maximum pulling force	tf	700
Maximum working force	tf	600
Maximum working stroke	mm	2.000
Installed capacity	kW	59
Overall dimensions (L*l*h)	mm	12.895*3.160*1.800
Mass	kg	22.246

The hydraulic drawing equipment consist the following base parts:
a) hydraulic power module;
b) hydraulic drawing systems.

2.2. *Hydraulic power module*

The hydraulic power module (Fig. 1) provide the necessary working pressure for hydraulic drawing systems and consist the following components:

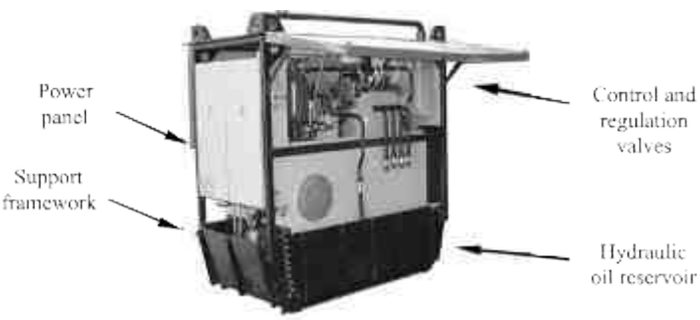

Fig. 1 – Hydraulic power module

- **support framework** – made of two welded constructions (the upper framework and the lower framework) coupled together by screws. The lower framework serves as support for two variable displacement pumps and hydraulic oil reservoir and the upper framework serves as support for switchboard and front panel devices and is provided with ears hanging to manipulation;
- **hydraulic oil reservoir** – with manholes for cleaning and inspection, absorption flanges for the pumps, oil lever indicator, vent plug and oil drain plug;
- **power panel** – consist all electrical equipments;
- **control panel** – displays all working parameters (Fig.2);
- **control and regulation valves**.

Fig. 2 – Control panel

2.3. *Hydraulic drawing systems*

Consist the following components (Fig. 3).

- **chassis** – made in welded construction is composed of two heavy, linked together by side-members. This subset is formed as a support for sled pulling head and ears mounted at the rear of the chassis is made catching hydraulic cylinders. The chassis is fitted with lugs for anchoring drawing systems, his structure to allow downloading of force, strains of which are exclusively in the elastic. The bottom of the chassis is plated with tin, thus ensuring a better shooter stability during operation;
- **head drawing** – made in welded steel construction, coupled with being on the chassis plaque clearance and is related to the two hydraulic cylinders for operating the connecting bolts. Head drawing is mounted balanced bolt with which the training is done by pulling the chain. Drawing on the chassis sliding head is driven by two hydraulic cylinders. The motion to advance causes, by closing automatic balanced bolt, chain pull, and the motion to withdraw latch opens automatically, the chain remains stuck in the latch housing mounted (bolt fix), and occurs as the head of drawing and preparation of withdrawal it to a new drawing phase;
- **chain guide stand** – placed at the rear of the chassis and is designed to guide and properly oriented chain entering the system drawing;
- **hydraulic cylinders** – are articulated on the chassis mount through bolts and stick their head is coupled by bolts of fire. Hydraulic cylinders made successive movements of drawing with a speed *VAT* > 0.32 [m/min];

latch fixed – is to block the withdrawal phase chain drawing head movement allowing him by drawing system in the phase advance of the head fire.

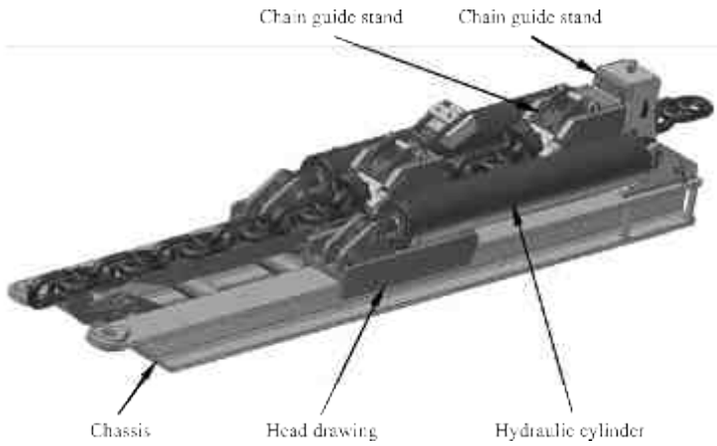

Fig. 3 – Hydraulic drawing systems

Keeping working temperature of fluid is ensured by a hydraulic cooling circuit consisting of a electro-pump water and a heat change. Switch ON / OFF electro-pump is automatically depending on the oil temperature from reservoir, or manually from the panel display of functional parameters.

3. Operating modes

According with hydraulic diagrams (Fig. 4) the hydraulic drawing equipment can operate in three modes of working.

3.1. *Automatichal "Cutting" operating mode*.

Requires work in tandem to the two drawing systems (running motion of advance and the other motion to withdraw) and thus moving forward-back chain one race than 2 m. During this procedure can be done to curtail the movement of one fictitious load on the route shooter chain running race withdrawal. This is achieved by mounting the circuit advance to the second pulling. Chokes valves of sense to curtail the movement of cylinders in the movement of withdrawal. The return movement of hydraulic cylinders to end position is achieved automatically through commands received from PLC.

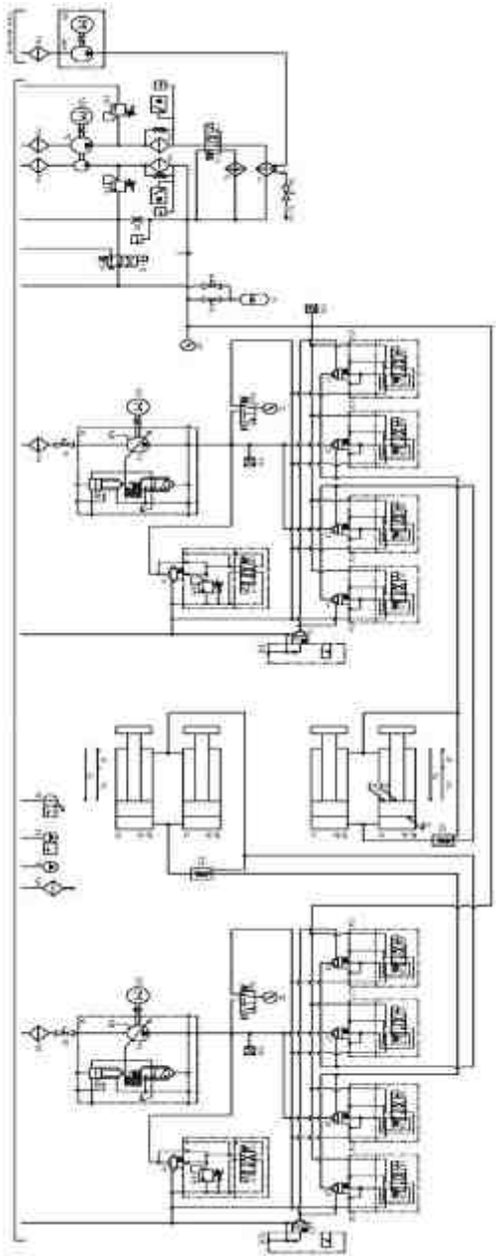

Fig. 4 – Hydraulic diagram

3.2. *Automatically "Synchronous Speed" operating mode*

Involves displacement of both synchronous drawing systems, with a maximum gap of 5 mm. Synchronizing movement is monitored by the PLC entering the electrical design structure that receives signals from the displacement transducers mounted on each drawer. Drawing hydraulic equipment is mobile and can be built in the interest of the beneficiary.

3.3. *Manual operating mode*

Involves attending the following steps:

? starting the pump M3 by pressing control circuit pump and achievement in the circuit to operate pressure preset;

? starting the pump M1 (M2) on the remote control and is expected to enter their normal working arrangements (motor drive is coupled to the "Ä");

? to make the cylinders advance switches switch the GROUP 1 COMMAND (GROUP 2 COMMAND) from the remote control on the ADVANCE position;

? to make the cylinders return switches switch the GROUP 1 COMMAND (GROUP 2 COMMAND) from the remote control on the RETIRED position.

In Fig.5 is presented the scheme to plant lubrication and lubrication mode.

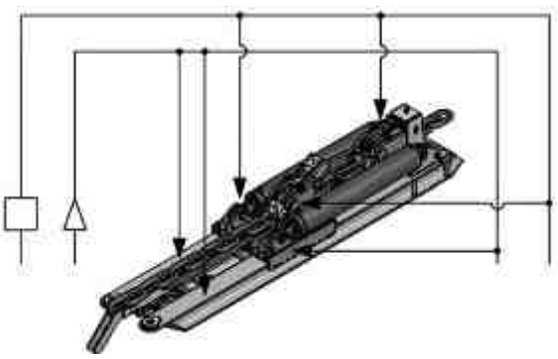

Fig. 5 – Plant lubrication schemes

The ADVANCE – WORKING PRESSURE DIAGRAM is presented in Fig. 6.

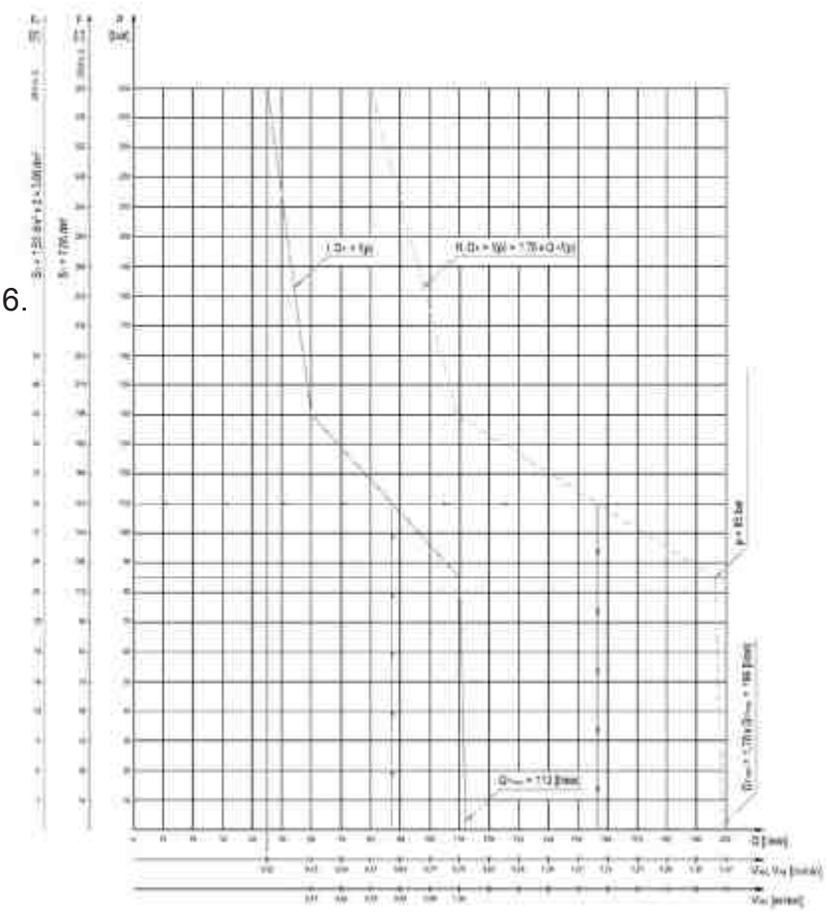

4. Conclusion

1. Because the equipment is built on modules this is ensure a high mobility and can be moved quickly and placed in any place of work.
2. Depending on the tonnage of the refloating ship, the number of the drawing systems can vary, their supply hydraulic oil pressure is only making a single hydraulic pressure module.
3. In the case of the heavy diving ships, replaces the successful use of floating cranes for refloating.

AUTOMATIC ADJUSTMENT FOR HYDRAULIC TRANSMISSIONS OF THE AEOLIAN SYSTEMS FOR ENERGY PRODUCTION

REGLAREA AUTOMATA A TRANSMISIILOR HIDRAULICE ALE SISTEMELOR EOLIENE DE PRODUCERE A ENERGIEI

drd.ing. Daniel BANYAI* ; S.L.dr.ing. Lucian NASCUTIU* ;
Prof.dr.ing. Liviu VAIDA*; S.L.dr.ing. Lucian MARCU*

*Universitatea Tehnica din Cluj-Napoca

1. Description of adjustment scheme

The achievement of an adaptive behavior for hydraulic transmissions of the aeolian systems for energy production, requires both the use of sensors corresponding of the used parameters (number of revolutions, flow rate, torques) and a complex adjustment, able to quickly compensate for any change of the external disturbances (wind speed, variations of load). In the following we will refer to systems of automatic adjustment specific to hydraulics transmission that have as load electric generators (because of the complexity of maintaining a constant rpm respective a frequency of 50 Hz).

The structure of the automatic adjustment system is shown in Figure 1 and it correspond to the hydraulic transmission shown in Figure 2. The subsystem C1 makes flow adjustment of the pump P1, who is drive by the impeller, at the instantaneous flow requirements. This adaptation is done according to wind speed and the command given by the subsystem C2. The latter is responsible for maintaining constant speed of the oil hydraulic motor MH1, respectively at the consumer, in condition of load variation (fluctuations of electricity consumption). Subsystem C1 is subordinate to the system C2. The adjustment system is equipped with a transducer for measuring speed and torque to the rotary hydraulic motor MH1. A less efficient version, but with financial advantages, is that who use for gauging an displacement transducer for measuring the stroke of the linear positioning cylinder. The flow rate measuring is done in this case indirectly. In this situation are not taking in account the internal leakages of the pump.

A substitute version for torque measurement can be realizable by measuring the pressure difference at the rotary hydraulic motor. In this case too, the solution is less efficient but with financial advantages.

a. The pump control system

The pump control system is accomplished by the controller C1 (figure 1). It contains a Fuzzy processor C1.1, with is done the flow adjustment of the pump at the instantaneous requirements by the Aeolian power-plant. The Fuzzy processor have two inputs, corresponding to the turbine speed, respectively to the command of the displacement. The output of the processor drive directly the adjustment system of the pump's displacement. At change of wind speed and/or the change of the command for displacement modification, the processor provides the necessary control signal, and via the adjustment system C1.2 is corrected the size of flow. The adjustment system is made by: one regulator, plant (servo valve positioning actuator variable displacement pump) and an flow transducer or in the case of the indirect adjustment an stroke transducer for the positioning cylinder. By the adjustment system is compared the value of necessary flow with the real value on transducer. The comparison result is the error signal which is applied to the controller for processing. The output signal of the controller will directly control the servo-valve for the variable displacement pump.

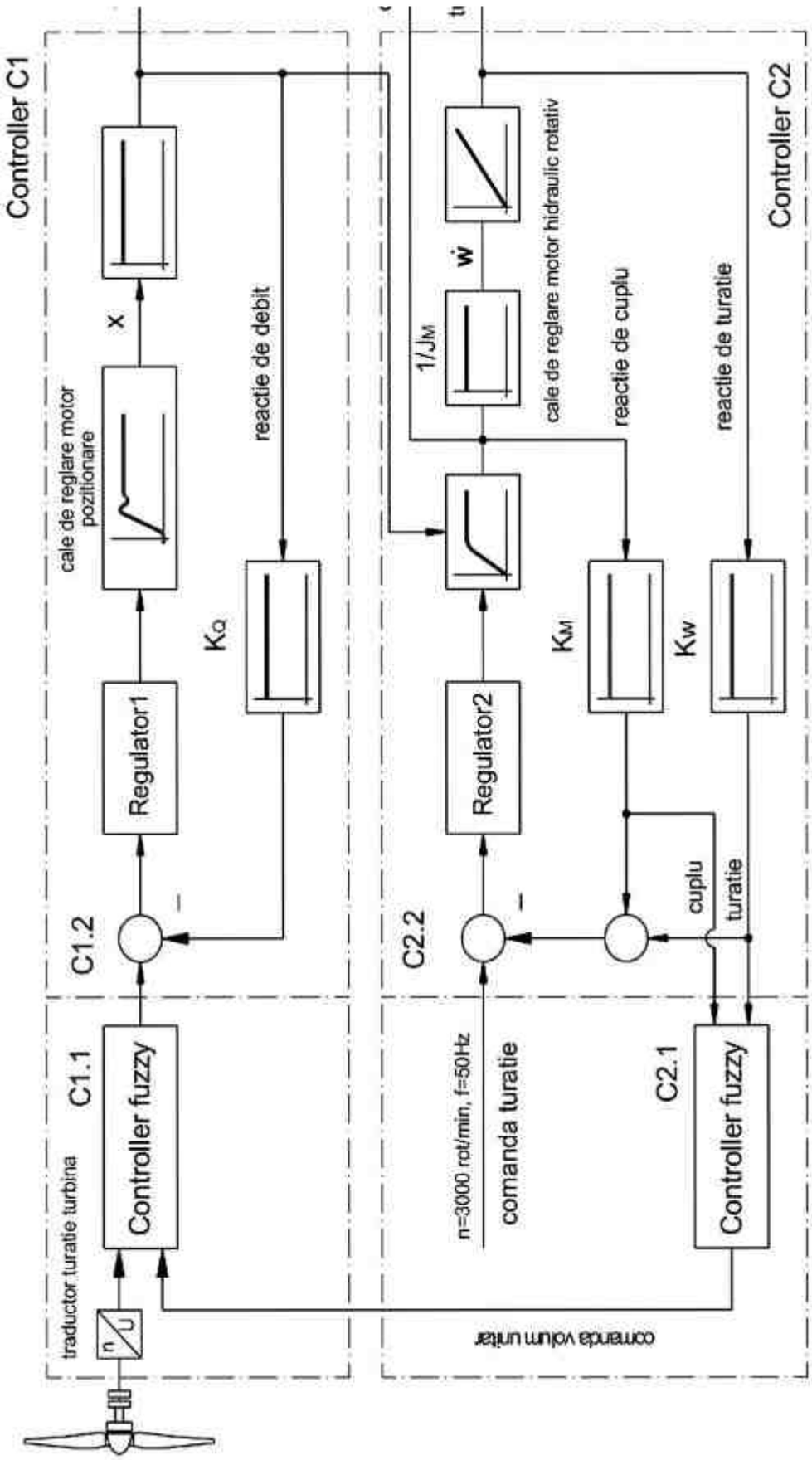

Figure 1 The adjustment diagram of the hydraulic transmission

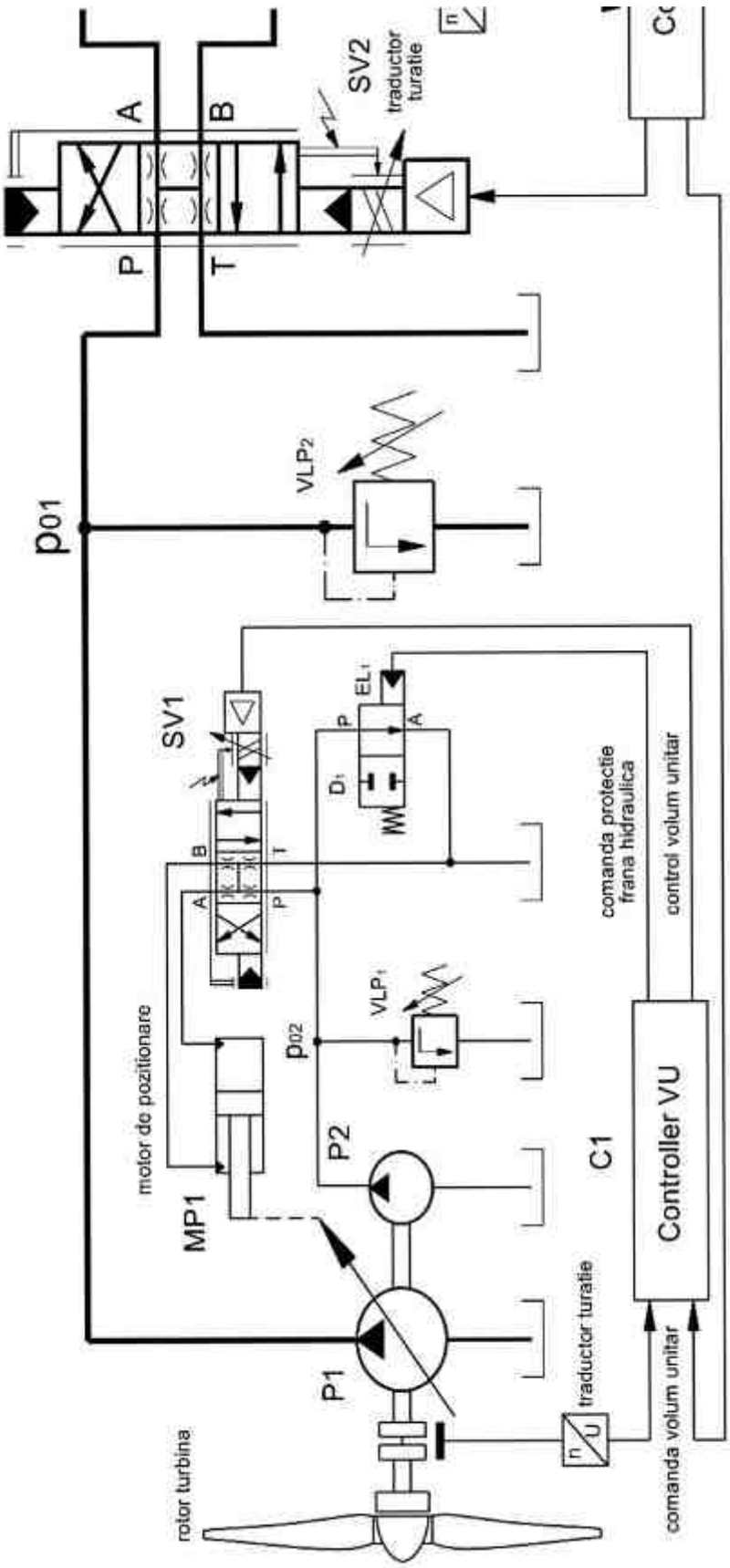

Figure 2 Diagram of the adaptive hydraulic transmission with variable displacement pump, fixed displacement motor and resistive command

b. The control system of the hydraulic rotary motor

The control system of the hydraulic rotary motor is made by the controller C2. It contains the Fuzzy controller C2.1 that provides command signal for the displacement variation of the pump based on the information on speed and torque. If the speed of hydraulic rotary motor varies, for example, due to changes in electrical energy consumption, the processor will command the increase or decrease of the pump displacement in accordance with the direction of error variation. The automatic adjustment of speed system C2.2 consist of a controller, plant (servo valve hydraulic rotary motor - load) and revolution transducer respectively torque transducer. Like structure adjustment system possesses: global feedback loop appropriate to revolution speed and a secondary appropriate to torque feedback. This feedback can be achieved by measuring the pressure drop on the hydraulic motor as torque measurement developed by the hydraulic motor.

2. Simulation of control systems for hydraulic transmissions

To simulate the control systems of hydraulic transmission it was used programming environment Matlab-Simulink. Numerical simulations were done for fuzzy processors performing transmission system adapting at changes in atmospheric conditions respectively at variation of mechanical parameters from the consumer, and for adjusting path for the flow, revolution speed and torque.

Remarkable advantage of using fuzzy processor, is primarily the simplicity of calculation, and use a computer system based on rules and similar assessments of biological systems. Also, we can remember here the advantage to use physical quantities, which not infrequently ill conditioned systems are operating as such in hydraulics, where the ratio of highest and lowest values is very high, which both can lead to significant errors in the processing and large computing times.

From this point of view fuzzy systems can work with scaled sizes, important qualitative aspect of the function being performed here and will ultimately achieve a single rescale of the signal.

Another important argument for using fuzzy systems modeling is the uncertainty of weather conditions, often judged statistically. It is therefore difficult to integrate in simulation systems, models of the atmosphere that are very complex and ultimately lead to undue economic complication of adjustment systems.

Finally it should be pointed out that the functions performed by processing fuzzy, are dependent on experimental work, experience gained through observation and testing. Therefore, adjusting the best of these systems will be in the experimental part.

a. Simulation of Fuzzy controller C1.1

Fuzzy controller generates control signal for controlling the flow at the pump, depending on the speed of wind turbine which drives the pump, that the control signal of the unit volume, dependent by the mechanical parameters.

Fuzzy system (Figure 3) has two inputs and one output, and the base consists of 12 linguistic rules.

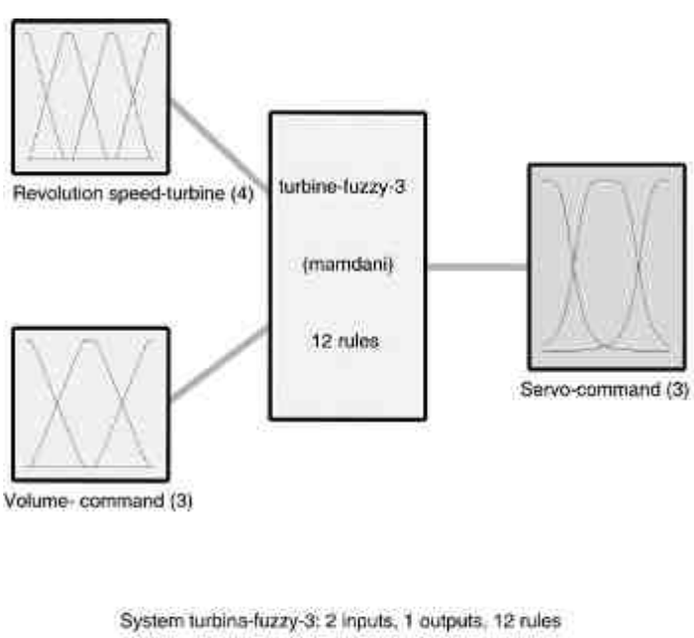

Figure 3. Fuzzy processing system to control the pump flow

For the fuzzification of the input quantities were chosen like member functions, the trapezoidal type (four functions for revolution speed and three for adjustment of displacement). This functions are figured in figure 4 and 5.

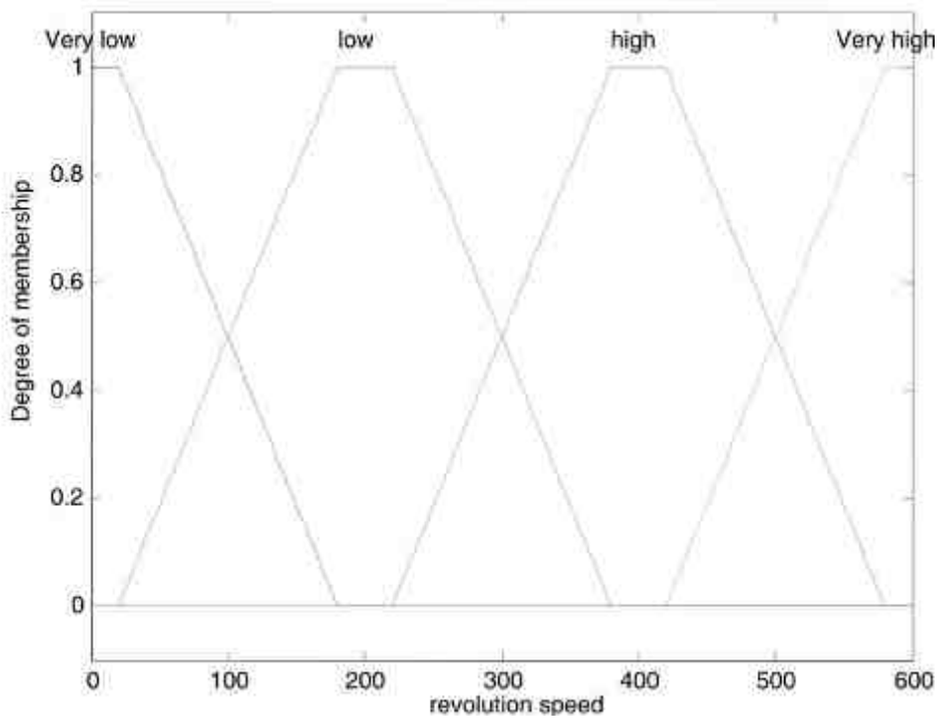

Figure 4. Input value fuzzification revolution speed of the turbine [rot/min]

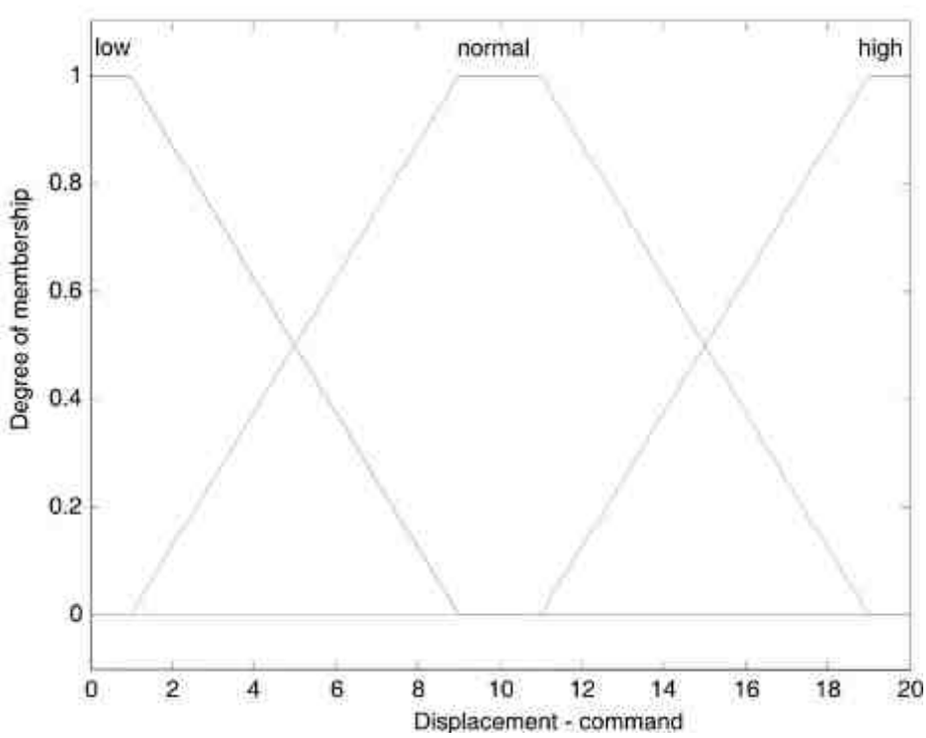

Figure 5. Input value fuzzification displacement command [cm^3]

For the fuzzification of the output values were chosen Gauss type member functions (figure 6).

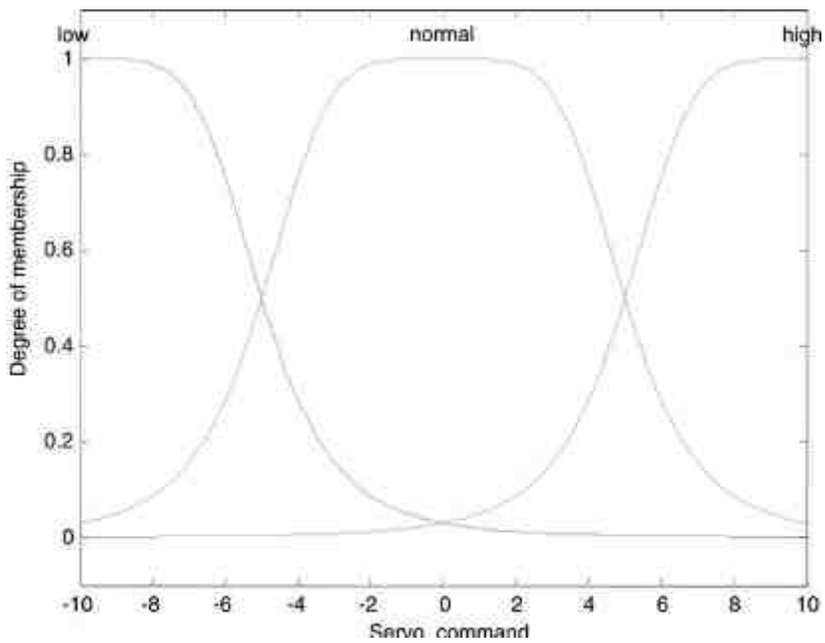

Figura 6. Output value fuzzification voltage for servo control [V]

Fuzzy processing base consists of 12 linguistic rules as follows:

1. If (revolution speed is very low) and (volume command is low) then (servo comand is normal) (1)
2. If (revolution speed is very low) and (volume command is normal) then (servo comand is high) (1)
3. If (revolution speed is very low) and (volume command is high) then (servo comand is high) (1)
4. If (revolution speed is low) and (volume command is low) then (servo comand is normal) (1)
5. If (revolution speed is low) and (volume command is normal) then (servo comand is high) (1)
6. If (revolution speed is low) and (volume command is high) then (servo comand is high) (1)
7. If (revolution speed is high) and (volume command is low) then (servo comand is low) (1)
8. If (revolution speed is high) and (volume command is normal) then (servo comand is low) (1)
9. If (revolution speed is high) and (volume command is high) then (servo comand is normal) (1)
10. If (revolution speed is very high) and (volume command is low) then (servo comand is low) (1)
11. If (revolution speed is very high) and (volume command is normal) then (servo comand is low) (1)
12. If (revolution speed is very high) and (volume command is high) then (servo comand is normal) (1)

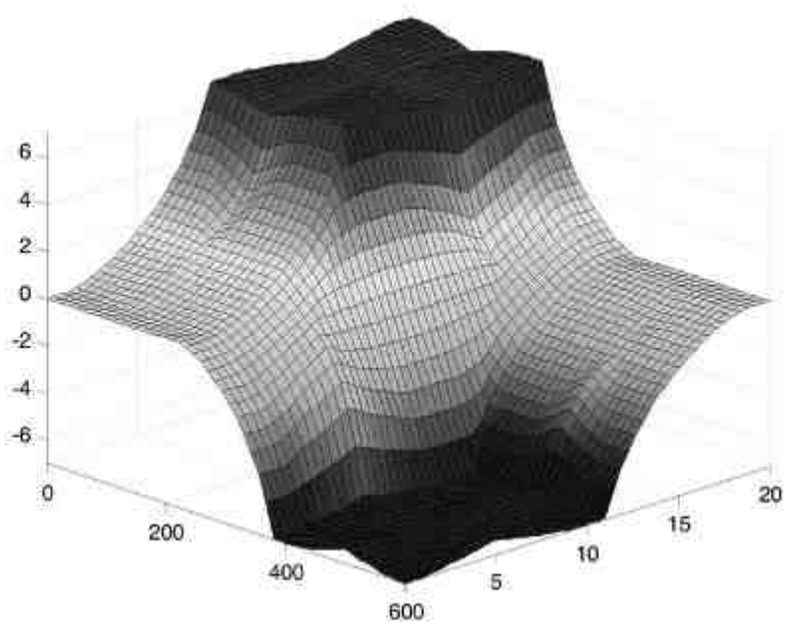

Figura 7. Nonlinear fuzzy function for flow control

After processing was obtained fuzzy nonlinear function shown in Figure 7.

For member functions was chosen both for input and output the Gauss type functions. (figure 9 and 10).

a. Simulation of Fuzzy controller C2.1

Fuzzy controller C2.1 generates control signal for displacement control of the pump, depending on speed, respectively on torque to the consumer. Fuzzy system has two inputs and one output, (figure 8) and the base consists of 11 linguistic rules.

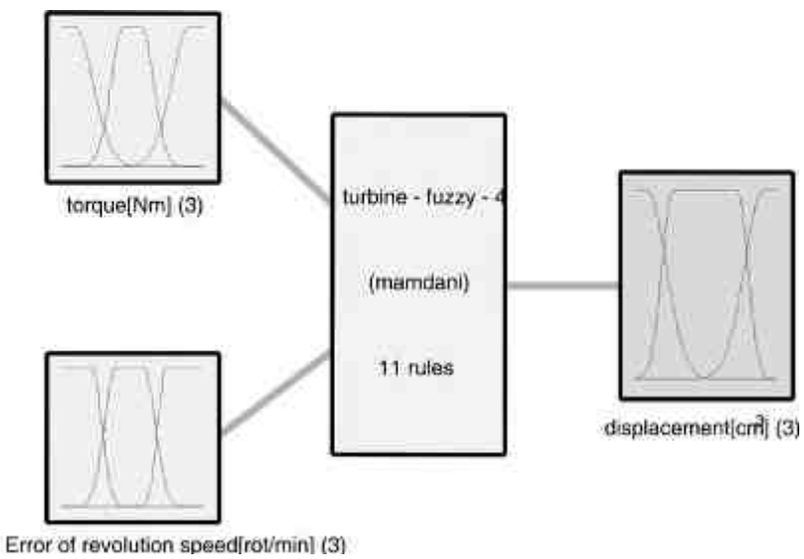

Figure 8. Fuzzy system for engendering the control signal of the displacement

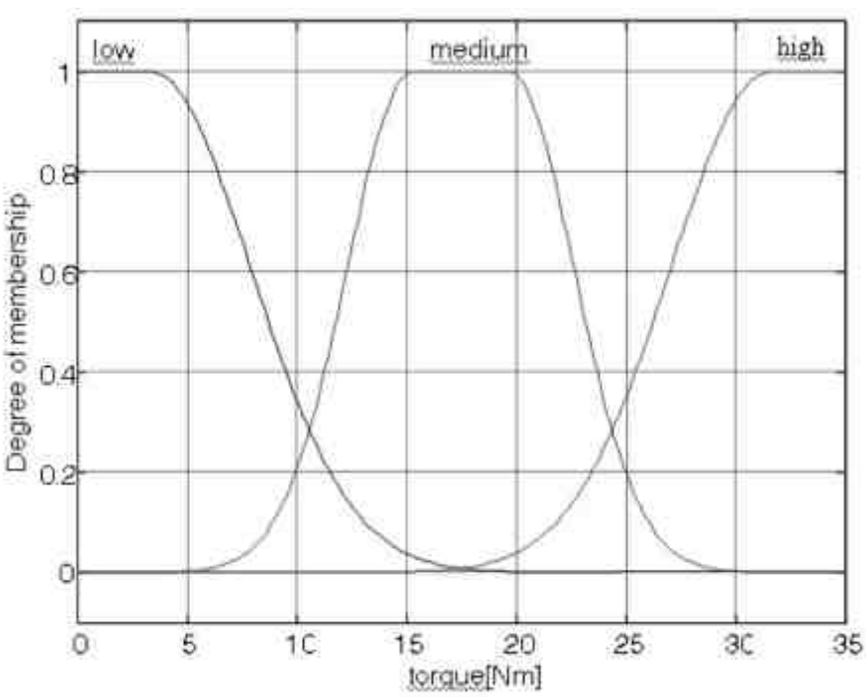

Figure 9. Input value fuzzification torque

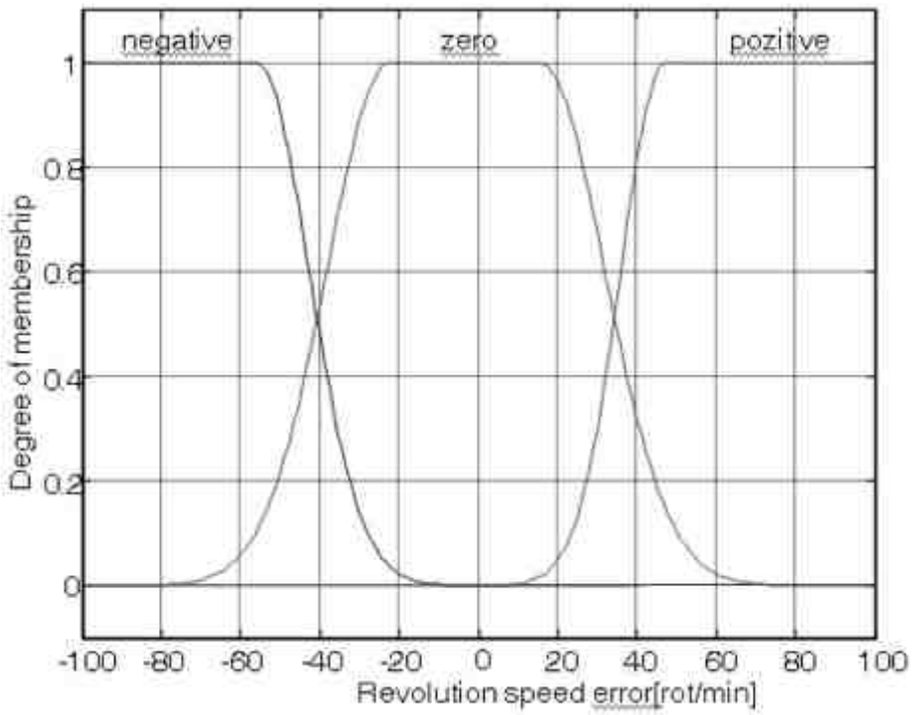

Figure 10. Input value fuzzification revolution speed error

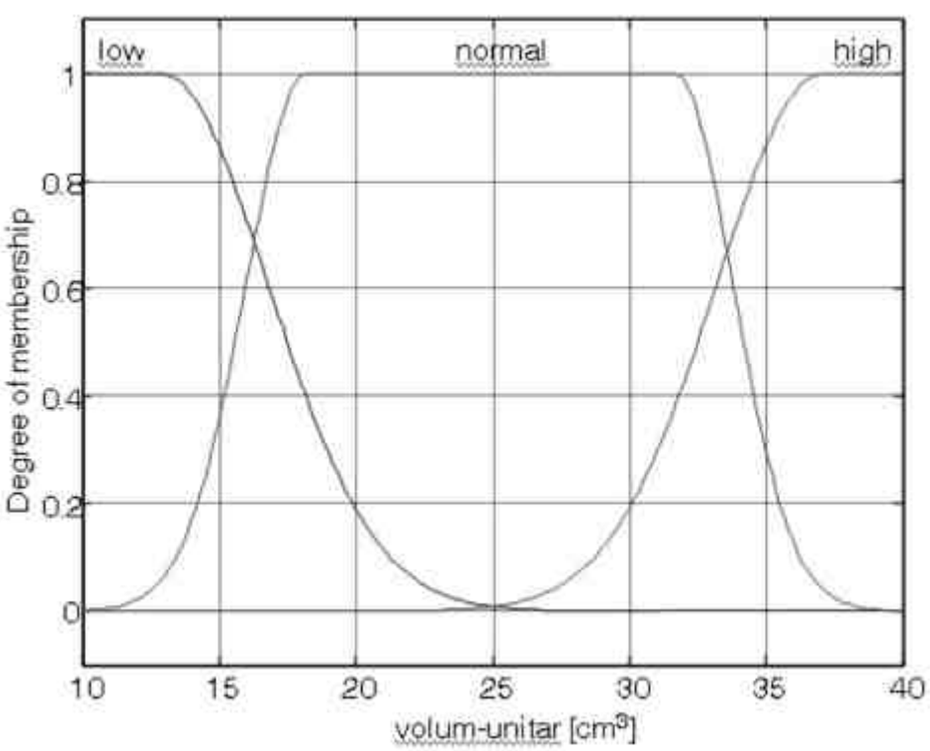

Figure 11. Output value fuzzification displacement

1. If (torque is low) and (speed-error is negative) then (displacement is normal) (1)
2. If (torque is low) and (speed-error is zero) then (displacement is normal) (1)
3. If (torque is low) and (speed-error is pozitive) then (displacement is low) (1)
4. If (torque is medium) and (speed-error is negative) then (displacement is high) (1)
5. If (torque is medium) and (speed-error is zero) then (displacement is normal) (1)
6. If (torque is medium) and (speed-error is pozitive) then (displacement is normal) (1)
7. If (torque is high) and (speed-error is negative) then (displacement is high) (0.5)
8. If (torque is high) and (speed-error is zero) then (displacement is high) (0.5)
9. If (torque is high) and (speed-error is pozitive) then (displacement is normal) (0.5)
10. If (torque is high) then (displacement is high) (1)
11. If (abatere-turatie is negativa) then (displacement is high) (1)

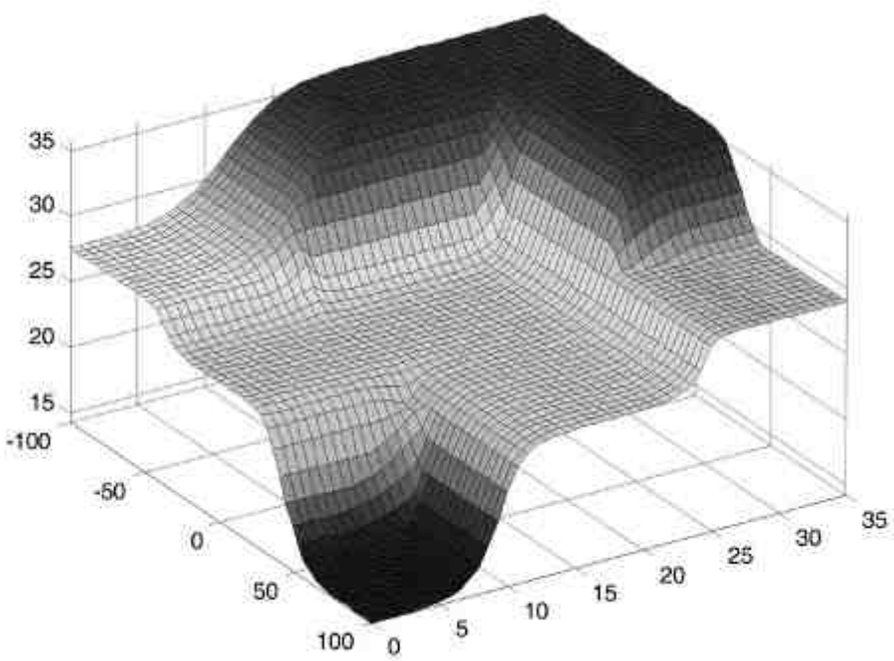

Figura 12. Nonlinear fuzzy function for displacement control

After processing was obtained fuzzy nonlinear function shown in Figure 12.

Bibliografie

1. Backe W. - Steuerungs- und Schaltungstechnik, Institut für hydraulische und pneumatische Antriebe und Steuerungen der RWTH, Aachen, Germania, 1987.
2. Bu F., Yao B., Desired Compensation Adaptive Robust Control of Single-rod Electro-hydraulic Actuator, School of Mechanical Engineering, Purdue University, West Lafayette, IN 47907.
3. Deacu L., Rădulescu M., Banabic D., Rapiu C., Tehnica hidraulicii proporţionale, Ed. Dacia, Cluj-Napoca, 1989.
4. Deacu, L., Năcuţiu L., Asupra reglajului automat de viteză a motoarelor hidraulice, Buletin informativ HIDRAULICA, Institutul de cercetări pentru hidraulică şi pneumatică, Bucureşti, 1997.
5. Eryilmaz B., Improved Nonlinear Modeling and Control of Electro-Hydraulic Systems, Thesis for the degree of Doctor of Philosophy, The Department of Mechanical, Industrial, and Manufacturing Engineering, Northeastern University, Boston, Massachusetts, August 2000.

6. Fees G., Study of the static and dynamic properties of a highly dynamic ER servo drive, Ölhydraulik und Pneumatik, No. 1, 2001.
7. Nãºcuþiu L., Giurgea C., Concerning nominal flow and pressure to proportional valves, Buletinul ºtiinþific al Universitãþii Politehnica din Timiºoara, a V-a Conferinþa Internaþionalã de Maºini Hidraulice ºi Hidrodinamica Timiºoara, octombrie 2000, ISSN-1224-6077.
8. Nãºcuþiu L., Deacu L., Vaida L., Raþiu C., Creºterea performanþelor actuatorilor electrodinamici de comandã a aparaturii hidraulice, Lucrãrile celui de-al III-lea Simpozion, Metode moderne in ingineria echipamentelor hidro, 27-28 sept. 2001, Ed. Politehnica, ISBN973-8247-45-4, Hidrotim S.A., Timiºoara, p. 171.
9. Nãºcuþiu L., Lageregelung von hydraulischen Zylindern der Fertigungsmaschinen mit Hilfe der Fuzzylogik, Arbeitsbericht, TU Braunschweig, 2004.
10. Nãºcuþiu L., Cercetãri ºi realizãri în vederea creºterii performanþelor statice ºi dinamice ale axelor hidraulice NC, Tezã de doctorat, Cluj-Napoca, 2004.
11. Vaida L., Comanda proporþionalã a pompelor reglabile, Tezã de doctorat, Universitatea Tehnicã Cluj-Napoca, 1999.
12. Vaida, L.,Nãºcuþiu, L., Deacu, L., Stand experimental pentru determinarea caracteristicilor motoarelor hidraulice, Buletin informativ HIDRAULICA, Institutul de cercetãri pentru hidraulicã ºi pneumaticã, Bucureºti, 1999. ISSN/453-7303.
13. Vaida L., Opruþa D., Nãºcuþiu L., Implementarea pompelor si motoarelor reglabile electro-hidraulice în sisteme informatizate de conducere a maºinilor, Lucrãrile celui de-al III-lea Simpozion, Metode moderne în ingineria echipamentelor hidro, 27-28 sept. 2001, Ed. Politehnica, ISBN973-8247-45-4, Hidrotim S.A., Timiºoara, p. 134.
14. Zudor E.I., Mihalcz I., Baranyi P., Csibi V., Fuzzy Logic Control Method for a SMA Wire Driven Robot Mechanism, Tenth World Congress on the Theory of Machines and Mechanisms, Oulu, Finland, June 20-24, 1999.
15. *** www.mathworks.com, Matlab, Fuzzytoolbox
16. *** www.nordex-online.com, Windturbine
17. *** www.vestas.com, Wind power solutions

PERFECTION TECHNOLOGY FOR SOWING HOEING PLANT BY USING MODERN TECHNICAL EQUIPMENT PROVIDED WITH DEVICES FOR DISTRIBUTION FERTILIZERS AND INSECTICIDES MICROGRANULATED

TEHNOLOGIE PERFECTIONATA PENTRU SEMANATUL PLANTELOR PRASITOARE FOLOSIND UN ECHIPAMENT MODERN PREVAZUT CU DISPOZITIVE PENTRU DISTRIBUTIA FERTILIZATORILOR SI A INSECTICIDELOR MICROGRANULATE

Eugen MARIN* , Ion PIRNÃ* , Iosif COJOCARU* , Dragoº MANEA*, Cristian SORICA*

** INMA Bucharest*

Abstract: *Compared to the construction of machinery for hoes plants existent today in manufacturing and exploitation, the construction of technical equipment has some new solutions on the sowing stations, which are equipped with new distribution devices, vertical distributing discs with holes of different sizes which may change slightly depending on the crop sown, that it can achieve the sowing of many hoes crops and in order to allow work under different conditions of soil preparation, the sowing stations are equipped with double disk plows. Dependent upon the sowing and the distance between rows, transmission (for seeds, fertilizers and granular insecticides), stands markers behind and support wheels can be mounted on the frame bar equipment both between stations and outside their sowing the same line, that allows a variety of schemes for sowing, for crops that require distance between rows and crops that require little distance between rows, while allowing free access and technical assistance.*

Keywords: *technology, sowing, technical equipments, hoeing plants.*

1. INTRODUCTION

Modern crop establishment and hoes plant fertilization prevent degradation of soil structure by incorporating direct solid chemical fertilizers and insecticides in the form of granules. For this purpose are used specialized machinery which have in their composition distribution systems of seeds, solid chemical fertilizers and insecticides. Agricultural machine-building companies in the EU made enormous efforts to improve seed distribution systems, solid chemical fertilizers and insecticides in granular form to achieve superior work quality parameters. In accordance with the overall strategy of the company MAT SA Craiova through research and development in partnership with INMA Bucharest was developed a new machinery for sowing, weeding and fertilizing plants distributed in the form of micro insecticides. It contains new solutions in terms of seed distribution system and distribution device in the form of micro insecticides.

However, it is easier, safer, low weight at a lower price and which has simple and easy made adjustments being adapted to the needs of beneficiaries. By adopting the optimal solutions in conceptual design parameters to ensure superior quality work, safety in the exploitation and transport, enhanced reliability, maintenance and simple made adjustments it will help increase the competitiveness of the machinery required on market helping this way strengthening the innovative capacity of MAT Craiova society and to strengthen its contribution to creating new products.

2. DESTINATION AND DESCRIPTION OF DESIGN

Machinery (Fig. 1) designed for mechanization technology of hoes plant crop is used for sowing many hoes crops (grain by grain sowing for maize, sunflower, beans, sugar beet and forage, sorghum, cotton, etc., or in nests with 2-3 seeds for melons, cucumbers, zucchini, etc..) and allows working in a variety of schemes and sowing conditions.

Fig. 1. Equipment for sowing and fertilizing hoes plant crops provided with sowing stations endowed with disk plows and devices with distribution of insecticides in granular form

It is comprised from the following major subassemblies: framework, wheel drive left-right support, air, vacuum, Department of sowing, fertilizer box, foot bunker, foot boxes, micro, seed transmission, markers of left behind right, the shareholders tracers , micro boxes, foot parking plows fertilizers and micro, intermediate gear, transmission and micro fertilizers and Cardan transmission.

Department of sowing (Fig. 3) is mounted on the frame bar via a system of articulated rods and plates which are attached to a square pipe with two clamps. The sections are provided with boxes sowing seed distribution device for pneumatic, double disc coulter, compaction wheel and chain transmission.

Fig. 3. Department of sowing

The **distributor of seeds** (Fig. 4) completely new skeleton is made of two rotating disc between sowing interchangeable.

Fig. 4. Seed distributor

Sowing discs are made of steel and are fitted with holes to distribute seed. Depending on the variety of seed sowing holes discs are different diameters from 2.5 to 5.5 mm. Discs can be changed easily without recourse to any utensil. To eliminate losses from seed or vacuum chamber is provided a disk lowland and gaskets. To allow working in different conditions of soil preparation for sowing stations are equipped with double disk plows (Fig. 5).

Fig. 5. Double disc coulter

Hope fertilizer has prismatic form with angles of flow for all types of fertilizers. The hope is provided at the bottom, with three slots for draining-feed fertilizer distributors. Under these slots are vending fertilizer type grooved cylinder (Fig. 6).

Fig. 6. Hope fertilizer provided with fertilizer distributors type with grooved drum

They acquire and distribute fertilizers through flexible tubes to the skate shares. The volume of fertilizer distribution device evacuated to a rotation of grooved cylinder is dosed with high accuracy because of the potential regulation length grooved with the aid of a tuning screw.

Seed transmission (Fig. 7) is to forward movement of the seed distribution devices. The transmission includes a manual transmission chain that serves to regulate the standard of seed per hectare. Rotational movement of the discs of the seed distribution apparatus takes place via a chain transmission.

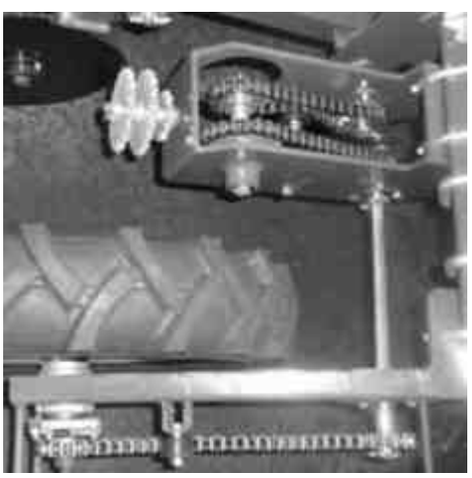

Fig. 7. Seed transmission

3. OPERATION

In making the move to the tractor PTO, the blower, trained by shaft transmission shaft and belt type poly V, creating a depression that is transmitted through pneumatic tubes to absorb the vending of sowing divisions. Because of air depression, seed in food rooms are retained on disk vending outlets. The movement of technical equipment, wheel support and drive forward movement right through the transmission chain to distributors axes, revolving disk, sending seed to the channels opened by double disk shovels. Each hole of the disk set only one seed due to limited space around the hole.

To eliminate the surplus of grain (which is incidentally) is a fixed scraper covering up to one third of the disc hole. To this end there is a correlation between the diameter of the hole layout on disk, the diameter of the holes and scarper position. Also, the left wheel support and drive forward movement through the transmission chain axes distributing chemical fertilizers crates and boxes of micro solid. Fertilizer distributors in the box are the type with grooved drum. They acquire and distribute fertilizers through flexible tubes to skate shares. The volume of fertilizer distribution device evacuated to a rotation of grooved cylinder is dosed with high accuracy because of the potential regulation length grooved with the aid of a tuning screw.

Fertilizers and micro transmission (Fig. 9) is to forward movement in appliances distribution of chemical fertilizers and granular distribution microgranulelor devices.

Fig. 9. Broadcast fertilizers and micro

Dispensers distributed micro grooved cylinder type insecticides in the amount set through flexible tubes to the skate shares. Adjusting the rules of fertilizer (ammonium nitrate, urea, nitrocalcar, superphosphate, complex, etc.) and micro is made according to agro-technical requirements and the type of chemical fertilizers and micro used, by appropriate choice of wheels in the transmission chain of technical equipment. The skate shares as gutter running some of sowing depth and sowing the drain side are placed fertilizers and insecticides as micro. The compacting wheels close channels and compact soil on the sides of the row sowing. Management of technical equipment in the field is made after traces of markers on the ground.

4. MAIN TECHNICAL CHARACTERISTICS:

The main technical and functional characteristics are presented in Table 1.

Table 1

Characteristic	U.M.	Value
Energy Source	CP	65
Number of rows	buc.	6
The distance between rows	mm	45…70
Working width	m	4,2
Depth of sowing	cm	2...12
Type exhaust-fan		Curved vane rotor before dark
Seed distribution device type		Vertical pneumatic drive
Shares type of sowing seeds		Double Disc
Seed box capacity	dm^3	36
Number of cases of solid chemical fertilizer	buc.	2
The ability of solid chemical fertilizer boxes	dm^3	120
Fertilizer distribution device type		grooved cylinder
Number of boxes of micro	buc.	6
The ability of micro box	dm^3	16
Distribution device type micro		grooved cylinder
Cutter type fertilizer / micro		patina
Type markers from		spherical disc
Action markers ago		the hydraulic mechanism of "scissors"

Precision machinery running sowing grain-grain the following main crops: corn, sunflower, castor, soya, beans, sorghum, sugar beet, cotton. It provides the following densities of sowing (Table 2).

Table 2

Culture	The distance between rows, cm	Thousands beans in ha	Steps adjusting the density to ha
Maize	70	40...100	From 5 to 5 thousand, the range of 40-60 thousand, and from 10 to 10 thousand in the range 60-100 thousand
Sunflower	70	50...90	From 5 to 5 thousand, the range of 50-60 thousand, and from 10 to 10 thousand in the 60-90 thousand range
Castor	70	70...100	From 10 to 10 thousand
Soybeans	70	300...800	From 25 to 25 thousand in the range of 300-500 thousand, and from 50 to 50 thousand in the range 500-800 thousand
Beans	45	300...600	From 25 to 25 thousand in the range of 300-500 thousand, and from 50 to 50 thousand in the range 500-600 thousand
Sorghum grain	70	50...450	From 25 to 25 thousand
Sugar beet	45	150...250	From 25 to 25 thousand
Cotton	50	200...300	From 25 to 25 thousand

Machinery running sowing under schemes of Figure 10.

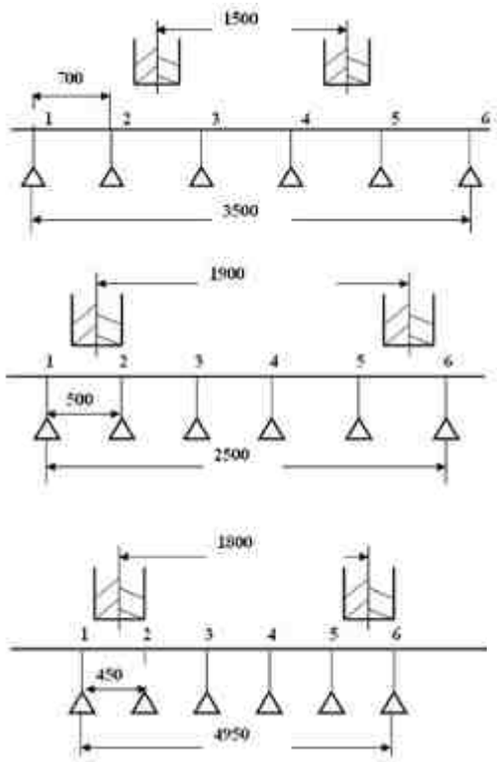

Fig. 10. Scheme sowing

Operating Indices

In experiments in operating conditions, conducted over an area of 52 hectares, machinery had throughout the good behavior, under these conditions the values of the coefficient of safety achieved in service between 0.984% 0.981% ... which are plotted in Figure 11, yielding an average of 0.983% and values of the hourly work capacity during the exchange, W07 of between 1.4 ... 1.49 ha / h which are plotted in Figure 12, yielding an average of 1.46 ha / h.

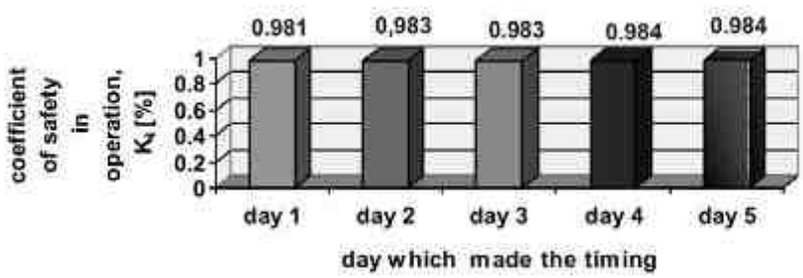

Fig.11. Graphical representation of the coefficient of safety in operation,, K4

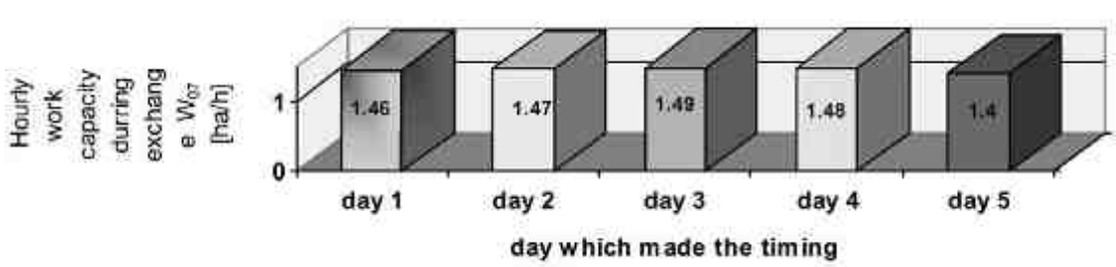

Fig. 12. Graphical representation of the hourly work capacity during exchange, W_{07}

5. CONCLUSIONS

Hoes plant machinery for sowing, fertilizers and insecticides in the form of micro distributed the following advantages over similar equipment in use:

- Allows for a diversity of schemes sowing, the crops that require distance between rows, and for those requiring small distance between rows;
- Allows working with different conditions of soil preparation for sowing seed because fitting sections with double-disk type plows;
- Ensure access, facilitate and reduce time to change discs distributors and technical assistance to transmission to seeds, fertilizers and granular insecticides as support wheels;
- Has a simplified construction because new solutions chosen which gives realization of technologically easy, safe operation, maintenance, adjustment simple and operated by a single controller (tractor);
- Ensures operator safety by meeting the essential safety requirements.

6. REFERENCES

1. Creating a new technical equipment to market demand for sowing and fertilizing crops sown hoes provided with sections of disk plows and equipment with distribution of insecticides microgranulated, contract 12 concluded by S.C. MAT S.A. INMA Bucharest to Craiova and Bucharest Politehnica AMCSIT INNOVATION Program

2. Eugen Marin, Trâncã Dan-Constantin, “TECHNICAL EQUIPMENT FOR MODERN TECHNOLOGY ESTABLISH AND FERTILIZED CROPS WEEDING BY COMPANIES IN EU”, Magazine of Agriculture Mechanization no. 4/2008, pg. 11…22, ISSN 1011-7296, Bucharest

3. Eugen Marin, Dragoº Manea, Livian Victor Andrei, Valentin Cătălin ª tiucã, EQUIPMENT FOR CROP SOWING AND WEEDING PROVIDED FERTILIZED WITH SECTIONS RESEMBLING CUTTER DISC AND APPARATUS FOR DISTRIBUTION INSECTICIDES MICROGRANULATED, Magazine of Agriculture Mechanization no. 5-6/2009, ISSN 1011-7296, Bucharest

4. OSIM a patent application no.: A/00664/28.08.2009, Machinery for sowing plants hoes, fertilizers and insecticides in the form of micro distributed, Authors: Marin Eugen, Cojocaru Josif, Sorica Cristian Marian-INMA Bucharest, Andrei Livian Victor-SC MAT S.A. Craiova

GAMA DE ECHIPAMENTE DE RIDICAT CU ACTIONARE HIDRAULICA, UTILIZAND FLUID DE INALTA PRESIUNE

RANGE OF HYDRAULIC LIFTING EQUIPMENT, USING HIGH - PRESSURE FLUID

- ing. Laurentiu VEBER - SC Prestcom SA Focsani
- ing. Catalin DUMITRESCU - INOE 2000 – IHP Bucuresti
- ing. Florin GEORGESCU - INOE 2000 – IHP Bucuresti

Abstract:
The vast majority of industrial activities and services carrying out requires mechanical lifting operations, transportation, storage of various products; for performing these activities in good conditions, technical means used must ensure adequate performance, but also a high reliability.
Hydraulic drives were imposed in this area because large forces developed, compact dimensions, with easy handling; because of possible use in conditions of safety and reliability of the high working pressures, are registered and a corresponding increase in performance of lifting equipments.

1. INTRODUCERE

Echipamentele de ridicat sunt utilizate in cele mai diverse sectoare ale activitatii economice, intrucit majoritatea bunurilor – materii prime, produse intermediare sau finite - pe toata durata ciclului de viata, de la fabricatie si pina la scoaterea din uz, necesita operatiuni de transport, depozitare, montaj, instalare. Datorita acestei varietati de domenii de utilizare, exista un mare numar de solutii, atit din punct de vedere functional, cit si al performantelor.

Cea mai simpla si des intilnita solutie pentru echipamentele de ridicat este utilizarea ca sursa de energie a unui fluid sub presiune (lichid sau gaz). Nivelul presiunilor de lucru a crescut constant, ajungindu-se astazi ca presiuni de ordinul 630...700 bar sa fie curent folosite, presiunile maxime de lucru putind ajunge la unii fabricanti pina 2500...3000 bar sau chiar mai mult.

In ceea ce priveste utilizarea actionarilor pneumatice la mijloacele de ridicat, nivelul de presiune le recomanda pentru sarcini mai reduse sau, in cazul in care se doreste ridicarea de sarcini mari, se utilizeaza solutii specifice, cum ar fi cricurile de tip “perna” sau “airbag”, cu unul sau mai multe elemente active; cu surse de alimentare proprii, aceste cricuri pot utiliza presiuni de pina la 200 psi (14 bar).

Cele mai importante mijloace de ridicat cu actionare hidraulica sau pneumatica sunt cricurile, platformele ridicatoare si transpaletele. Intrucit, dupa cum s-a aratat anterior, ele sunt indispensabile activitatilor industriale sau de prestari servicii, in dotarea firmelor si pe piata interna exista un mare numar de astfel de produse; particularitatile pietei romanesti – intreprinderi de mici dimensiuni, fara o specializare stricta a productiei, sume reduse destinate achizitiilor de mijloace tehnice, etc. – au condus la urmatoarea situatie:

- nu exista o acoperire suficienta cu mijloace de ridicat
- multe din produsele utilizate in momentul de fata, desi sunt relativ noi, prezinta deficiente legate de calitate, avind o fiabilitate redusa; aceste produse sunt de regula fabricate in tari asiatice, de catre fabricanti obscuri, si oferite la preturi reduse
- desi exista pe piata romanesca oferte ale firmelor consacrate in domeniul mijloacelor de ridicat si transportat, preturile sunt greu accesibile pentru majoritatea firmelor care ar putea utiliza aceste produse
- inexistenta unui producator national de astfel de echipamente, care sa asigure o calitate inalta si un pret adaptat pietei

Luand in considerare toate aceste aspecte, SC PRESTCOM SA Focsani, firma din categoria IMM, avind o activitate productiva in sfera aparaturii hidraulice, s-a

orientat catre fabricarea de mijloace de ridicat de tip cricuri hidraulice, pentru sarcini de 2, 5 si respectiv 10 tf. Nivelul ridicat al presiunilor de lucru, care duce la o constructie compacta si cu gabarit redus, a impus colaborarea cu o unitate specializata in actionarile hidraulice; astfel, proiectarea produselor a fost realizata in colaborare cu INOE 2000-IHP Bucuresti.

2. PREZENTAREA SOLUTIILOR ADOPTATE

La ora actuala exista mai multe tipuri de cricuri hidraulice, cu diverse mecanisme de actionare, toate avind la baza forta produsa intr-un cilindru hidraulic, in care se instaleaza o presiune ridicata; forta data de aceasta presiune este transformata in forta de ridicare cu ajutorul diverselor mecanisme, sau se aplica direct sarcinii de ridicat. Fluidul de lucru este de obicei uleiul hidraulic mineral aditivat, iar pentru ridicare se utilizeaza o pompa hidraulica cu actionare manuala sau mecanica. Tipurile principale de cricuri hidraulice sunt:

- cilindru hidraulic, cu una sau mai multe trepte
- cric hidraulic tip “butelie” sau “gheara”
- cric hidraulic tip “crocodil”

Gama de cricuri hidraulice ce se doreste a fi produsa de firma PRESTCOM se compune din 2 cricuri de tip "crocodil”, pentru sarcini de 2, respectiv 5 tf, si 1 cric de tip cilindru hidraulic cu 2 trepte, pentru sarcina de 10 tf.

Cricurile de tip crocodil

Aceste cricuri sunt des utilizate in activitatile de reparatii auto, cind sunt necesare interventii locale la autoturisme, care nu necesita ridicarea intregului ansamblu; sunt deasemenea utilizate in atelierele de reparatii ale anvelopelor, pentru demontarea rotilor de pe autovehicule, dar si in alte tipuri de ateliere mecanice, unde sunt manevrate sarcini corespunzatoare. Prezinta o actionare usoara, de regula manuala cu o pirghie, si o foarte buna sprijinire a sarcinii pe durata utilizarii, avind totodata gabarit si greutate reduse; deplasarea este usurata de rotile montate la extremitatile suprafetei de contact.

Indiferent de marimea sarcinii ridicate, schema hidraulica de actionare este comuna; o varianta a acesteia este prezentata in figura 1.

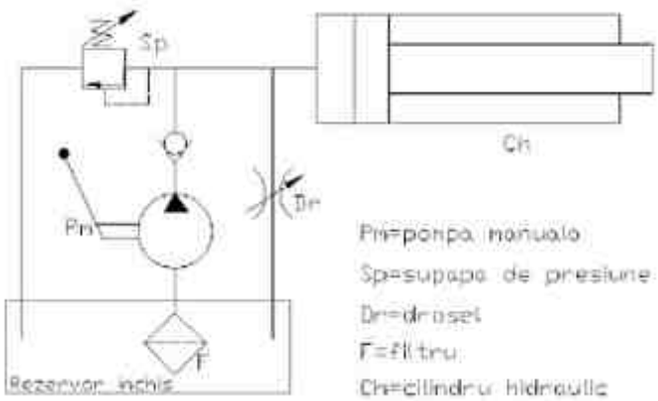

Figura 1 – Schema hidraulica a cricurilor de 2, respectiv 5 tf

Cricul pentru şărcină de 2 tf

– caracteristici constructive si functionale

Partea hidraulica de actionare, care asigura forta utila, este alcatuita dintr-un bloc cu aparate, conform cu schema de mai sus, si un cilindru hidraulic cu simpla actiune: revenirea se face cu ajutorul unui arc, la care se poate adauga greutatea sarcinii.

Blocul cu aparate este realizat din semifabricat turnat sau laminat, in functie de posibilitatile fabricantului; in acest caz s-a ales solutia fabricatului laminat, care poate fi aprovizionat cu usurinta de pe piata interna. Blocul de aparate contine:

- supapa de presiune directa, avind P_{max} reglabila pina la 1000 bar, de tip "cartus", etansarea fiind de tipul bila pe scaun
- pompa manuala de tip plunjer
- droselul de descarcare (sau robinetul pentru coborire), care permite curgerea fluidului din cilindru la rezervor, cind se doreste coborirea sarcinii sau pur si simplu indepartarea cricului (dupa asigurarea sustinerii sarcinii prin alte mijloace).

Solutia utilizarii aparaturii hidraulice de tip "cartus" a fost aleasa de firma producatoare datorita unor avantaje specifice:

-posibilitate de executie in cadrul firmei, datorita complexitatii medii si dotarii corespunzatoare

-siguranta in functionare

-posibilitate de reparare si inlocuire usoara

Cilindrul hidraulic este inglobat in rezervorul cu ulei.

Caracteristicile functionale principale:
-diametrul pistonului: 30 mm
-diametrul tijei: 22 mm
-cursa pistonului: 68,3 mm
Mecanismul de ridicare de tip paralelogram, permite o cursa verticala de 145 mm; pe masura ridicarii sarcinii, cele 4 roti pe care se sprijina cricul – din care 2 rotative - permit o deplasare pentru pozitionare optima sub sarcina ridicata.
Ansamblul bloc hidraulic – cilindru este prezentat in figura 2, iar in figura 3 este prezentata realizarea fizica, la nivel de model experimental.

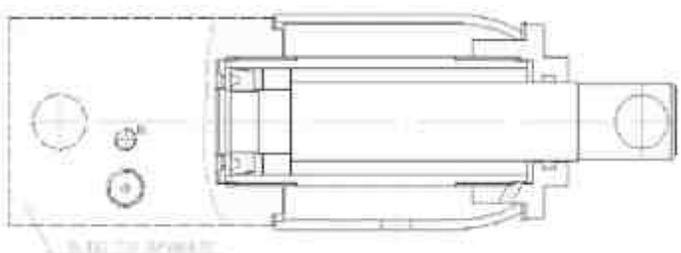

Figura 2 – Cilindrul hidraulic de actionare si blocul de aparate din componenta cricului de 2 tf

Figura 3 – Cric hidraulic cu sarcina 2 tf

Cricul penţru şărcină de 5 ţf

Are o constructie asemanatoare cu cel de 2 tf, 50% din repere fiind comune cu cele ale variantei anterioare; aceasta usureaza integrarea in fabricatie in cadrul firmei si aprovizionarea cu reperele care nu pot fi produse la nivelul SC PRESTCOM SA.
Diferentele se observa la dimensiunile produsului, dar si la cilindrul hidraulic si la cursa pistonului:
-diametrul pistonului: 40 mm
-diametrul tijei: 35 mm
-cursa pistonului: 107 mm
-cursa pe verticala a mecanismului de ridicare: 244 mm

Presiunea maxima de lucru se situeaza la aceeasi valoare de 1000 bar.
In figura 4 este prezentata constructia ansamblului hidraulic boc de aparate – cilindru hidraulic, iar in figura 5 varianta executata in colaborare de SC PRESTCOM SA si INOE 2000 – IHP.

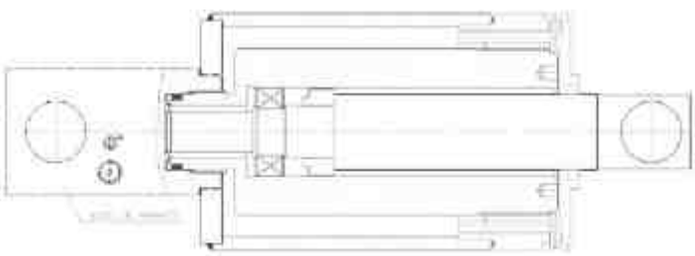

Figura 4 – Cilindrul hidraulic de actionare si blocul de aparate din componenta cricului de 5 tf

Figura 5 – Cric hidraulic cu sarcina 5 tf

Cricul de ţip cilindru hidrăulic cu şărcină de 10 ţf

In cazul in care se doreste deplasarea pe verticala a unor sarcini mari, la o cursa mare, se apeleaza la solutia cilindrilor hidraulici cu una sau mai multe trepte, dupa cum se poate vedea in exemplul din figura urmatoare.

Figura 6 - Sistem de repunere pe sine cu cilindru hidraulic cu 2 trepte (LUKAS)

In acest caz se utilizeaza o pompa manuala separata, cu un rezervor care sa asigure umplerea camerelor treptelor cilindrului, iar legatura se face cu un furtun flexibil de inalta presiune, prevazut cu cuple rapide.

Aceasta este si solutia adoptata de firma PRESTCOM pentru ridicarea sarcinilor de pina la 10 tf.

Principalele caracteristici:

-tipul cilindrului: telescopic in 2 trepte, cu cilindri hidraulici de tip plunjer si revenire sub sarcina
-cursa maxima pe treapta I, respectiv II: 206 mm, resp. 224 mm
-cursa totala: 430 mm
-sarcina maxima: 10 tf
-presiunea la sarcina maxima: 630 bar
-sistem dublu de rezemare / ghidare a tijelor, care sunt cromate dur pentru cresterea rezistentei la uzura si protectie contra oxidarii
-placa de sprijin la partea inferioara, pentru cresterea stabilitatii.
-etansari de inalta calitate, rezistente la presiuni de pina la 700 bar.

3. CONCLUZII

Utilizarea presiunilor ridicate poate duce la obtinerea de produse din gama echipamentelor de ridicat cu gabarit si mase reduse, dar impune totodata o calitate a fabricatiei corespunzatoare; pe linga o calitate a suprafetelor corespunzatoare, sunt necesare sisteme de etansare performante, rezistente la uzura si care sa lucreze la presiuni ridicate. In acest caz, s-a considerat oportuna achizitionarea acestora de la producatori consacrati, pentru toate cele 3 variante de mijloace de ridicat.

Totodata, solutiile tehnice si de fabricatie trebuie sa asigure producerea la un pret competitiv, tinand seama de celelalte echipamente de pe piata. Firma SC Prestcom SA Focsani dispune de toate conditiile de realizare a acestor produse de calitate superioara – dotare tehnica, personal cu bogata experienta in actionarile hidraulice si tehnologii de fabricatie – putind deveni un producator consacrat pentru acest tip de echipamente.

REFERENCES

1.Opreăn, A., Ioneşcu, Fl., Dorin, Al. - Acţionări hidraulice. Elemente º i sisteme, Editura Tehnicã, 1982.

2.Chiriţă, C., Călărăşu, D. - Actionarea hidraulica a masinilor unelte. Editura PANFILIUS, Iasi, 2002, **ISBN 973-85195-2-7**.

3.Avrăm, M., - Acţionări Hidraulice º i Pneumatice. Echipamente º i sisteme clasice º i mecatronice. Editura Universitarã, Bucureº ti, 2005. **ISBN 9737787-40-4.**

4.Alămoreanu, M., Tişea, T. – Maº ini de ridicat, Editura Tehnicã, Bucureº ti, 1996

- Prospecte º i cataloage ale firmelor: **NIK Hydrăulic, ENERPAC, POWER TEAM, LUCAS, HAWE, PARKER, SIMPLEX, HYDRAMOLD, NORCO, MASADA, MATJACK, MILWAUKEE, SIEPA**

- Colecţia revistei **OIL HYDRAULIK UND PNEUMATIK**

TEHNICI SI ECHIPAMENT PENTRU VERIFICAREA INFORMATIZATA A ETANSEITATII SCAUNELOR CU BILE DE LA POMPELE DE FORAJ

TECHNIQUES AND EQUIPMENT FOR THE COMPUTERIZED CHECK UP OF THE TIGHTNESS OF BALL CHAIRS FROM DRILLING PUMPS

Drd. Ing. Aurel ZAPCIU- INCDMTM
Sos. Pantelimon nr. 6 ÷ 8, sector 2, 021631, Bucuresti, ROMÂNIA
E-mail: incdmf@incdmf.ro ; cefin@cefin.ro;

Abstract:
The installation for checking up the tightness of the bill chairs has as main functional principle the change of pressure in a close system consisting of the bill chair, the electronic vacuum device with pressure sensor and electrovalve. For a perfect tightness of the system there must be maintained constant a vacuum of 0,64 bars for at least 3 sec.
The operational cycle must provide the tightness measurement in 3 different positions of the ball on the chair. The ball chair is considered functional according to the quality standards if in all the 3 positions the tightness is perfect.
The system for checking up the tightness of the ball chairs has the following structure:

- *System for generating vacuum with filter and afferent valves*
- *Automatic set board for running the cycle of measurement of the tightness*
- *Modular cradle made of Bosch profiles of 30x30 mm*
- *Data acquisition and processing system*
- *Switches, cables*

The economic efficiency of this system may be proven by the following arguments:

- *The results of the present research study may be applie in a strategic field like oil industry*
- *May support the optimum use of the oil resources*
- *May generate an increase in labor productivity*
- *The quality of the ball chairs influences positively productivity in the oil extraction field by using innovative materials, reducing times of unprogrammed stops with about 40-50% increasing implicitly production*

It is considered that the development of this system might be beneficial both for the manufacturers of ball chairs as well as for the beneficiaries of these products:

- *The quality of products will increase by eliminating scraps*
- *It is created the perfect groundwork for exports*
- *The business profit will increase with 20%*

The pollution with oil products will be reduced significantly by increasing tightness of ball chairs.

In ultimele decenii datorita dezvoltarii din domeniul materialelor dure si extradure s-au impus realizarea scaunelor cu bile de la pompele de foraj din carburi metalice sinterizate, foarte rezistente la uzura mecanica si chimica.
Realizarea lor a fost posibila datorita utilizarii cu succes a finisarii cu ajutorul materialelor bazate pe pulberi de diamante sintetice in tehnologii de lepuire, netezire.

Cresterea etanseitatii scaunelor cu bile din carburi metalice sinterizate conduc la eliminarea opririlor neprogramate ale utilajelor de foraj si pompare crescand randamentul in exploatare si productivitatea muncii la schelele petroliere.
Pe plan mondial se contureaza in ultima perioada tendinta de dezvoltare a unor materiale sinterizate cu densitate redusa fata de cele conventionale pe baza de carburi de wolfram.

Pe langa densitatea redusa, aceste materiale prezinta si alte caracteristici imbunatatite- rezistenta la temperaturi ridicate , rezistenta la coroziune si la uzura abraziva si eroziva- care fac posibila utilizarea lor atat in procesele cu solicitari intensive dinamice sau de uzare din domeniul energetic, nuclear, militar, etc.
Scaunele cu bila care realizeaza aceste caracteristici au in componenta lor un continut crescut de carbura de titan. Scaunele cu bila sunt elemente constructive de inalta tehnicitate , solicitate in industria petroliera, atat de constructorii de pompe de extractie de adancime , cat si de utilizatorii acestora, respectiv schelele petroliere de extractie a titeiului.
La instalatiile de extractie, bilele din carburi metalice sinterizate (cms), sunt componente ale unui ansamblu cu functii de supapa de sens unic (fig.1), din cadrul pompei de extractie.

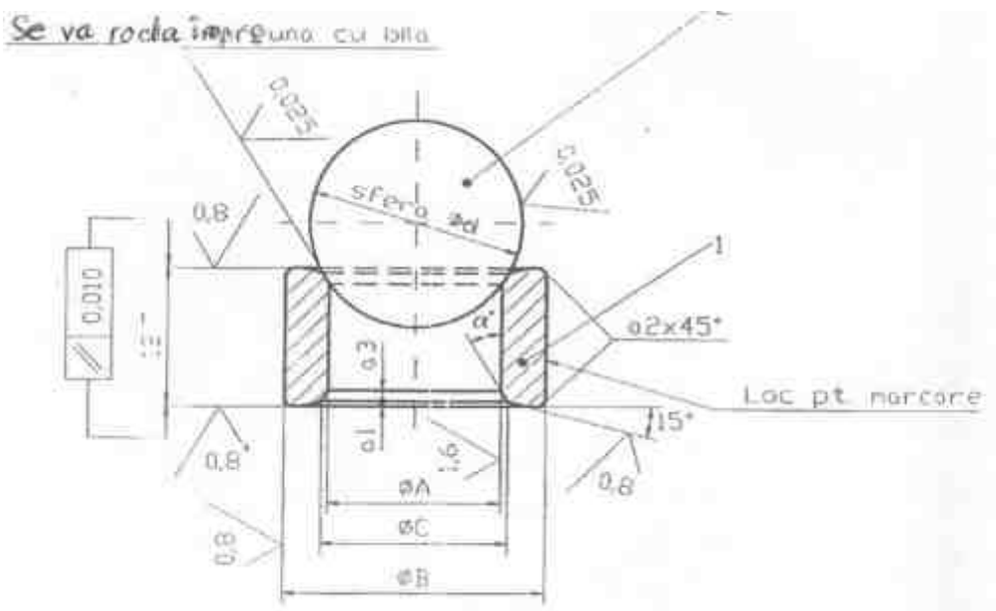

1- scaun

2- bila

Figura 1 Scaun cu bila

Din figura de mai sus se remarca precizia si gradul foarte inalt de prelucrare , conditii geometrice foarte greu de obtinut.

Pentru incercarea la etanseitate se are in vedere relizarea unei metode si tehnici care sa corespunda standardelor interne si internationale datorita domeniului caruia i se adreseaza.

Normativele britanice care au fost preluate in acest domeniu sunt:

SR EN 1779:2002/A1:2004 Încercarea de etanseitate. Criterii de alegere a metodei si a tehnicii

SR EN 13184:2003/A1:2004 Încercarea de etanseitate. Metoda prin variatia presiunii

SR EN 13185:2003/A1:2004 Încercarea de etanseitate. Metoda cu gaz trasor

SR EN 1593:2002/A1:2004 Încercarea de etanseitate. Tehnica prin emisia de bule

Alegerea uneia sau alteia din tehnicile de verificare si masurare calitativa si cantitativa a etanseitatii se face tinand seama de cazul concret al dispozitivului (aparatului) pe care dorim sa-i verificam etanseitatea .

Etanseitatea este determinata prin masurarea ratei de pierdere a gazului.

Pentru un gaz (aer) pierderea etanseitatii poate fi convenabil exprimat de variatia presiunii in timp in conditii specifice. Pentru testari, pierderea etanseitatii poate fi exprimata ca o rata de scurgeri in unitati de gaz pierdute (Pascali.mc^3/s).in conditii de temperatura si presiune specificate.

De exemplu o rata de pierderea presiunii de 5×10^{-4} Pa.mc/s este acceptata pentru aerul comprimat in cilindrul unui compresor- corespunde unei variatii a presiunii de 5000Pa intr-un volum de 10 l in 24 de ore sau 0,5 l pierduti masurati la presiunea atmosferica.

O rata a pierderilor de 10^{-10}Pa.m^3/s este normala pentru un stimulator cardiac, ce corespunde unei pierderi de 1 cm^3 la 30 de ani.
Urmatorii factori au cea mai mare importanta in etanseitate:

- natura si presiunea gazului
- temperatura de lucru

Masa gazului de testare este determinata in orice punct al aplicatiei cu legea gazului ideal

$$pV = \frac{m}{M} RT \rightarrow m = \frac{pMV}{RT}$$

$$m = \frac{MV}{RT} (p - p_v(T))$$

unde
V – volumul intern liber, m^3
R – constanta universala a gazului, J/mol.^{0}K
p – presiunea totala, Pascali
$p_v(T)$- presiunea partiala a vaporilor , in pascali, la temperatura T, in ^{0}K
m – masa totala a gazului necondensat, in kg
M – masa molara a gazului de testare, in kg/mol
T – temperatura gazului de testare, in ^{0}K
m' – masa gazului de testare, in kg.

Pierderea de masa este

$$m_1' - m_2' = \frac{M \times V}{R} \times \left[\frac{p_1 - p_v(T_1)}{T_1} - \frac{p_2 - p_v(T_2)}{T_2} \right] \quad (1)$$

unde subscriptorii 1,2 se refera la gazul de testare la inceputul si la sfarsitul testului
tinand cont de umiditatea relativa, vaporii de apa pot fi considerati a se comporta ca un gaz ideal, atunci expresia de mai sus devine:

$$m_1' - m_2' = \frac{M \times V}{R} \times \left(\frac{p_1}{T_1} - \frac{p_2}{T_2} \right) \quad (2)$$

Pierderea masica poate fi convertita ca un volum pierdut in conditii standard p_s , T_s

$$V_s = \frac{n.R.T}{p}, \text{ cu } n = \frac{m}{M}$$

unde n este numarul de moli
rate scurgerii devine

$$q_p V = \frac{V \times T_s}{\Delta t} \times \left(\frac{p_1}{T_1} - \frac{p_2}{T_2} \right) \quad (3)$$

unde Ät este durata testulu rata scurgerii, exprimata ca procent de pierdere(masa, presiune)

$$\Delta\% = \left(1 - \frac{p_2 \times T_1}{p_1 \times T_2} \right) \times 100 \quad (4)$$

Din cele prezentate mai sus reiese ca pierderile de etanseitate masice pot fi exprimate ca pierderi de presiune .

Standardul descrie tehnicile de determinare a ratelor de scurgere de-alungul marginii unei piese izolate, supuse unei diferente de presiune. Tehnicile sunt bazate pe evaluarea schimbarii masei de gaz din piesa testata .

Schimbarea volumului piesei (datorita schimbarilor de temperatura si presiune din timpul testului) trebuie luata in considerare. Totusi in unele aplicatii industriale aceasta schimbare (variatie) este atat de mica incat poate fi neglijata. Astfel,marea parte, partea principala a acestui standard considera volumul ca fiind o constanta in timpul testului.

Ecuatia gazelor ideale determina relatia dintre masa, presiune, temperatura si volumul de gaz continut in volumul liber interior al piesei. In unele circumstante, una sau mai multe variabile pot fi constante si astfel schimbarea masei poate fi , de exemplu dedusa prin monitorizarea presiunii sau schimbarii presiune – temperatura din interiorul piesei testate.

Testarea la etanseitate a scaunelor cu bile se va face la temperatura ambianta influenta variatiei de temperatura se va considera neglijabila.

Incercarea la etanseitate folosind metoda gazului trasor este mai dificil de aplicat datorita costurilor mari legate de aparatura necesara si anume aparatura sensibila la gazul trasor (spectrometru de masa), amplasarea acesteia de cealalta parte a marginilor piesei de controlat

Datorita faptului ca etanseitatea trebuie masurata in 3-4 pozitii ale bilei pe scaunui ei , aceasta trebuie rotita, lucru care impune ca accesul la bila sa fie liber.

Incercarea la etanseitate folosind metoda emisiei de bule este mai mult o metoda de incercare calitativa care aduc aceleasi dezavantaje ca si metoda cu gaz trasor, piesa fiind in imersie in lichidul de incercare.

Necesitatea verificarii etanseitatii in diverse pozitii ale bilei fac aceasta metoda greu de utilizat

Studiind metodele de verificare a etanseitatii scaunelor cu bile, se constata ca metoda cea mai usor de aplicat este metoda variatiei presiunii.

In conditiile obisnuite de incercare diferenta de temperatura din timpul testului este neglijabila datorita timpului scurt de mentinere la vacuum si ca atare temperatura se considera constanta.

Gazul folosit este aerul care in conditiile de purificare asigurate se poate asemana gazului ideal si deci se pot aplica formulele de calcul din termodinamica.

Diferenta de presiune la care este supus ansamblul scaun- bila nu produce deformatii care sa afecteze forma reperelor si sa contribuie la interpretari eronate a rezultatelor.

Instalatia de verificarea etanseitatii scaunului cu bila are la baza modificarea de presiune intr-un sistem inchis format de scaunul cu bila , vacuumetrul electronic cu senzor de presiune si electrovalva. Sistemul ca sa fie considerat etans trebuie sa mentina constant un vid masurat de 0,64 bari, timp de minim 3 secunde.

Acesti parametri – presiune si timp respecta normativul american din domeniu si anume API 11 AX , folosit de cel mai mare producator de utilaj petrolier din lume COOPER CAMERON, normativ adoptat si de PCC Sterom SA Campina, unul din utilizatorii instalatiei de verificare a etanseitatii

Realizarea ciclogramei de lucru se face cu automat programabil iar inregistrarea datelor cu inregistrator cu banda de hartie.

Ciclograma de lucru trebuie sa asigure masurarea etanseitatii in 3 pozitii diferite ale bilei pe scaun. Scaunul cu bila se considera admis calitativ daca in cele 3 pozitii se asigura etanseitatea.

Caracteristici tehnice

- sistemul trebuie sa asigure etanseitate la un vid de 0,64 bari
- timpul de mentinere a vidului 3 secunde
- automatizare cu automat programabil
- masurare vid cu vacuumetru electronic
- inregistrarea datelor pe banda de hartie

Sistemul pentru verificarea etanseitatii scaunelor cu bile (figura 2.1)are urmatoarea alcatuire:

- sistem de producere a vidului cu electrovalvele aferente si vacuumetru electronic(1)
- dulap de automatizare cu automat programabil pentru realizarea ciclogramei de masurare a etanseitatii, cu sistem de achizitie si inregistrare a datelor (2)
- batiu in constructie modulara din profile tip Bosch 30 x 30 mm.(3)

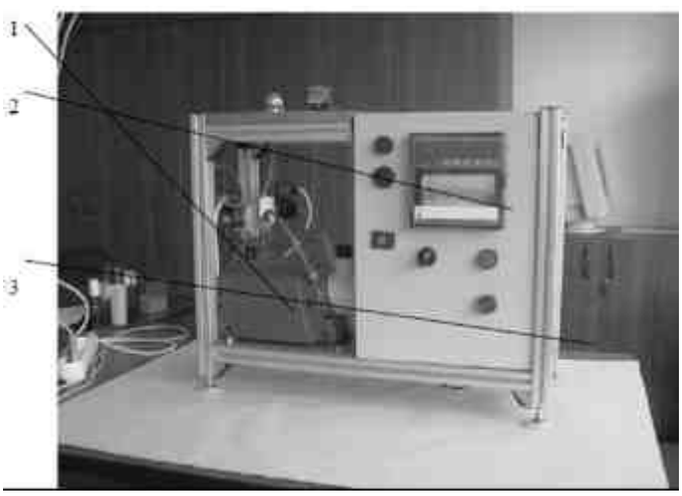

Figura 2. Instalatia de verificare a etanseitatii scaunului cu bila

La pornirea sistemului electrovalvele sunt in pozitie normal inchisa. In prima faza se deschide electrovalva de izolare (4) si porneste pompa de vid (6 –fig.3) In momentul cand se atinge vidul cerut de 0,64 bari, senzorul de vid din vacuumetru comanda inchiderea (4)si deschiderea electrovalvei de aerisire (3) prin intermediul automatului programabil din dulapul de automatizare .Dupa temporizarea de 3 secunde se citeste presiunea pe vacuumetru si se inregistreaza pe banda de hartie. Se deschide (4) si se roteste bila pe scaun in alta pozitie. Se inchide (3) si se reia ciclul de masurare pentru noua pozitie a bilei pe scaun. Se procedeaza in acest mod in 3 pozitii diferite ale bilei si daca in cele 3 masuratori nu se modifica presiunea , se considera ca scaunul cu bila asigura etanseitatea.

Pentru o buna vizibilitate , vacuumetrul se afla fixat pe placa de baza langa scaunul cu bile de verificat (figura 3)

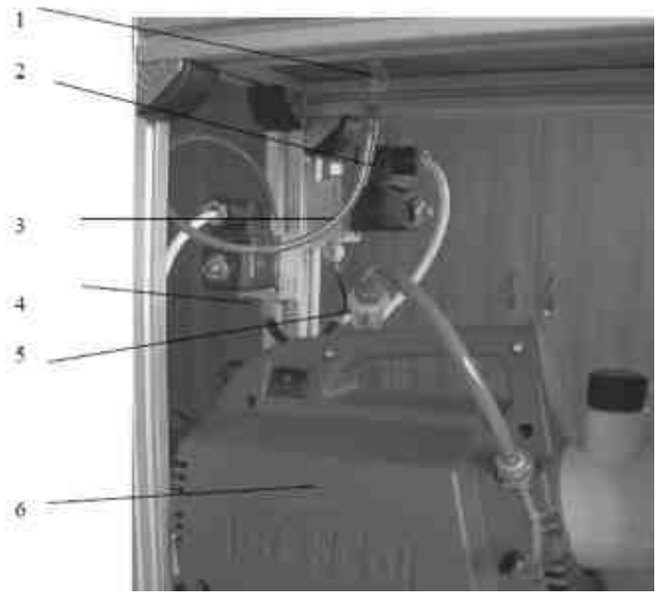

Figura 3 Sistemul de producere a vidului

1 – stut de racordare intre traseul vidat cu vacuumetru si scaunul cu bila

2 – furtun rigid din pvc

3 – electrovalva de aerisire-

4 - electrovalva de izolare

5 - filtru

6 – pompa de vid tip RL2- capacitate 35l/min, motor 0,16 kW , alimentare 220 V

Electrovalvele sunt de tip normal inchis, actionate de magnet tip solenoid cu timp de raspuns 10 ms.

Figura 4 Placa de baza cu scaunul cu bila si vacuumetrul electronic

Crateristici tehnice ale instalatiei

Cracteristici constructive ale pieselor verificate:

material: cms, sorturi destinate pieselor de uzura (G30; NG15);

gama dimensionala:Ø 19,05 ÷ Ø 42,88 mm;

precizie de executie:

tolerante: ± 0,015 mm

abatere de la sfericitate: 0,250 – 1,000 ì m

calitate de suprafata: Ra < 0,025 · 10-3 mm.

Caracteristici ale parametrilor tehnologici de verificare

vacuum de verificare la etanseitate 0,64 bari

timp de mentinere la vacuum 3 secunde , bila se verifica in minim 3 pozitii

Caracteristici constructive ale produsului:

caracteristici mecanice:

realizare vid: cu pompa de vid de capacitate 35 l/ min, pentru un vid de 15 microni (0,020 mbar)

caracteristici mecatronice:

pentru controlul vidului:

?senzor de vid cu precizie de masurare 0,1 %

? vacuumetru electronic de afisare pentru temporizare

? automat programabil ce controleaza si electrovalvele

Figura 5. Interior dulap de automatizare

1- inregistrator tip TRM10C pentru inregistrarea datelor pe banda de hartie.

2- sigurante

3- automat programabil

4- releu electronic

Concluzii

Realizarea echipamentului pentru verificarea etanseitatii scaunului cu bile de la pompele de extractie petrol se poate utiliza si la verificarea etanseitatii la diverse incinte inchise folosindu-se acelasi soft.

Eficienta economica a aplicarii rezultatelor cercetarii tin de domeniul strategic care il reprezinta industria petroliera, de valorificarea eficienta a resurselor de petrol, de productivitatea muncii in domeniu. Aparatul este unicat, realizat folosind tehnica de varf, elimina interventia operatorului in citirea si interpretarea rezultatelor.

Bibliografie

SR EN 1779:2002/A1:2004 Încercarea de etanseitate. Criterii de alegere a metodei si a tehnicii

SR EN 13184:2003/A1:2004 Încercarea de etanseitate. Metoda prin variatia presiunii

SR EN 13185:2003/A1:2004 Încercarea de etanseitate. Metoda cu gaz trasor

SR EN 1593:2002/A1:2004 Încercarea de etanseitate. Tehnica prin emisia de bule

MOBILE MACHINE WITH INTERCHANGEABLE MULTIFUNCTION EQUIPMENTS FOR THE HANDLING OF MATERIALS FROM AGRICULTURE, FORESTRY, CIVIL AND INDUSTRIAL CONSTRUCTIONS

UTILAJ MOBIL CU ECHIPAMENTE MULTIFUNCȚIONALE INTERSCHIMBABILE PENTRU MANIPULAREA PRODUSELOR DIN AGRICULTURĂ SI SILVICULTURĂ, A MATERIALELOR PENTRU CONSTRUCȚIA ŞI INTREȚINEREA DE DRUMURI

CONSTANTIN CHIRIÞÃ[1], DANIEL CALFA[2],
CORNELIU CONSTANTIN DUCA[2] and GHEORGHE PLEª U[1]
[1] *"Gheorghe Asachi" Technical University of Iaşi, Department of Machine Tools, e-mail:* disahp@disahp.net
[2] *Hydramold Company, Iasi, Research Department, e-mail:* hydramold@hydramold.com

Abstract. *This work presents a concept of mobile machine, UEMA type, developed within the research program INOVARE 2008, based on research contract no. 213 / 26.09.2008, in a partnership between 2 national companies and 2 national research institutes under the direct leadership AMCSIT of Bucharest.*
Key words: *interchangeble, mobile machine.*

1. Introduction

Regardless of specialization in agriculture, construction or demolition companies worldwide have these goals: speed in execution, adaptability regardless of activity, simple handling of materials, intensive and sustained work, minimizing the times operation.

To these are added the following restrictions: reducing the work area, reducing the dimensions of equipment and machinery, reducing the noises, vibrations and harms, increase the price steel and other materials, more low fuel consumption, lower costs for maintenance, repair and storage of machinery and equipment, efficiency works as the objectives become the global strategies.

The solution came from the manufacture of multipurpose machines on the structure of specific machine, compatible and operational with appropriate work equipments, easily coupled to a carrier mechanism. Many issues of cost, small size, strength and precision, have been solved by using hydraulic transmission of movements.

2. The Necessity of Making a Local Mobile Machine

In Romania, it does not exist a local manufacturer for a mobile machine like this and that these machines are imported. Thus, it is necessary to manufacture a mobile machine UEMA in order to perform quality intelligence works at a small price at operations of loading/unloading, transportation, lifting and transfer of specific materials from different industries.

The novelty UEMA product derived from:

a. meet the requirement of beneficiaries to have a custom machine, equipped with the equipments of the high productivity, contains proprietary solutions, using simultaneous commands, view the operations and functions;

b. is equipped with quick coupling work equipments;

c. is provided with control systems, monitoring and damage preventions;

d. is equipped with monitored systems functioning and operation functions of the mobile machine, optical and acoustic permanent surveillance;

e. eliminating uncontrolled intervention of the operator;

f. compact design which ensure easy portability, by modules, of multifunctional equipments;

g. levels pollution below the allowed limits.

Using the product provides the following advantages:

a. lower cost price by 22% compared to similar products from manufacturers surveyed;

b. minimum operating costs through efficient heat engine fitted which has reduced fuel consumption;

c. high reliability using the highest generation components;

d. ergonomic control station with heating system, air conditioned and pressurized cabin;

e. custom equipment of high productivity;

f. monitoring system operation and functions, warning and protection against damage;

g. monitoring during the lifetime of equipment, protection;

h. ensuring the operator training at the delivery equipment.

3. UEMA Mobile Machine Structures

3.1. *The Equipment Levels*

Wanting to provide clients a powerful machine, our specialists propose 4 levels of equipment for UEMA mobile machine:

i. first level – standard machine (blade digging - cranes rear leveling) with back equipment (fork mechanical for: plant debris, manure, round bales) (Fig.1,a);

ii. second level – standard machine (blade digging - cranes rear leveling) with back equipment (bucket for light materials) (Fig.1,b);

iii. third level – standard machine (blade digging - cranes rear leveling) with back equipment (cranes for wood) (Fig.1,c);

iv. fourth level – standard machine (blade digging - cranes rear leveling) with back equipment (stacker) (Fig.1,d).

Fig. 1 – UEMA level equipments:
a – first level; *b* – second level; *c* – third level;
d – fourth level.

UEMA mobile machine is done in a modular structure, whose description is made on sub-assemblies:

1. the standard machine: frame welding, heat engine, clutch, gearbox, engine deck rear, steered front, control station, cockpit, steering system, brake system, hydraulic system, electrical installation, systems monitoring of operations and functions, defenders protection;

2. the front equipment: blade digging - cranes rear leveling, made in welded structure, with quick coupling system, the tilt left/right system, the lifting mechanism with hydraulic cylinders and associated pipes;

3. back drive equipment: riding system, rotation systems of the arm, arm, fixed or telescopic handle, quick coupling mechanism of hydraulic equipment and the hydraulic installation, all sub-assemblies mentioned made in welded structure;

4. work equipment back are multifunctional, interchangeable, made in welded structure, with quick coupling systems on the carrier mechanism.

3.2. *Technical Characteristics*

The technical characteristics of UEMA mobile machine relating dimensional, functional and operating parameters on the standard machine and the work equipments, with delivery in two versions: standard or optional (Table 1)..

Table 1
Technical characteristics of standard machine

Components	Parameter	UM	Value
Chassis	–	–	rigid
Diesel Engine	rated output	kW/CP	60/81
	speed	rot/min	2.200
	maximum torque speed to maximum torque	Nm rot/min	290 1.400
	specific consumption of diesel	g/kW*h	220
	weight	kg	450
Transmission	clutch		dry monodisc
	gearbox distribution box		AK5
	crosshead ø180, ø150	daNm	560
Steered towards Rear engine deck	tire tire		310-406 (12-16)R 530-610 (21,3-24)R
Steering system	front		power steering Danfoss and two hydraulic cylinders steering and engine monitoring
Control station	back		joysticks and equipments control
	left side right side		brake monitoring systems gear shifter and transmission monitoring
Cockpit	one operator service brake		ergonomic swivel seat, heated, AC pneumatic
Brake system	safety brake		disk
	parking brake		spring incorporated in the double pneumatic cylinder of safety brake
Pneumatic plant			two circuits
Hydraulic plant Electric plant		 V	fixed displacement pumps 12
Electronics plant and monitoring of functions and defects			monitoring system of functions and operations, set of sensors, LEDs and digital display devices to monitoring parameters
Overall dimensions	in motion, LxWxH	m	6x2,5x3,85
	in working, LxWxH	m	9,6x4,6x6,75
Turning radius Wheel base		m m	7 0,4
Maximum ramp		%	18÷20
Capacity	oil reservoir	l	150
	diesel reservoir	l	100
Weight	standard machine	kg	7.480

Table 2
Technical characteristics of equipments

Components	Parameter	UM	Value
Clamp	capacity	m^3	0,67
	opening grip	m	1,85
	capture depth	m	2,5
	lift height	m	3,85
	estimated weight without charge	kg	250
Cup for light materials	capacity	m^3	1
	opening grip	m	1,85
	capture depth	m	2,5
	lift height	m	3,85
	estimated weight without charge	kg	300
Climbing root	capacity	m^3	1
	opening grip	m	1,85
	capture depth	m	2,5
	lift height	m	3,85
	estimated weight without charge	kg	250
	capacity grip	kg	1.000
Hook	capture depth	m	2,5
	lift height	m	3,85
	estimated weight without charge	kg	120
Levelling and cutting blade	width	m	2,45
	cutting depth	m	0,25
	lift height	m	0,70
	estimated weight without load	kg	380
	the angle of inclination of the blade	°	17
Excavation cup	capacity	m^3	0,44
	minimum radius of excavation	m	5,5
	depth of excavation	m	2,5
	ditch width	m	0,7
	estimated weight without charge	kg	190

Outline dimensions of a mobile machine type UEMA are given in Fig. 2.

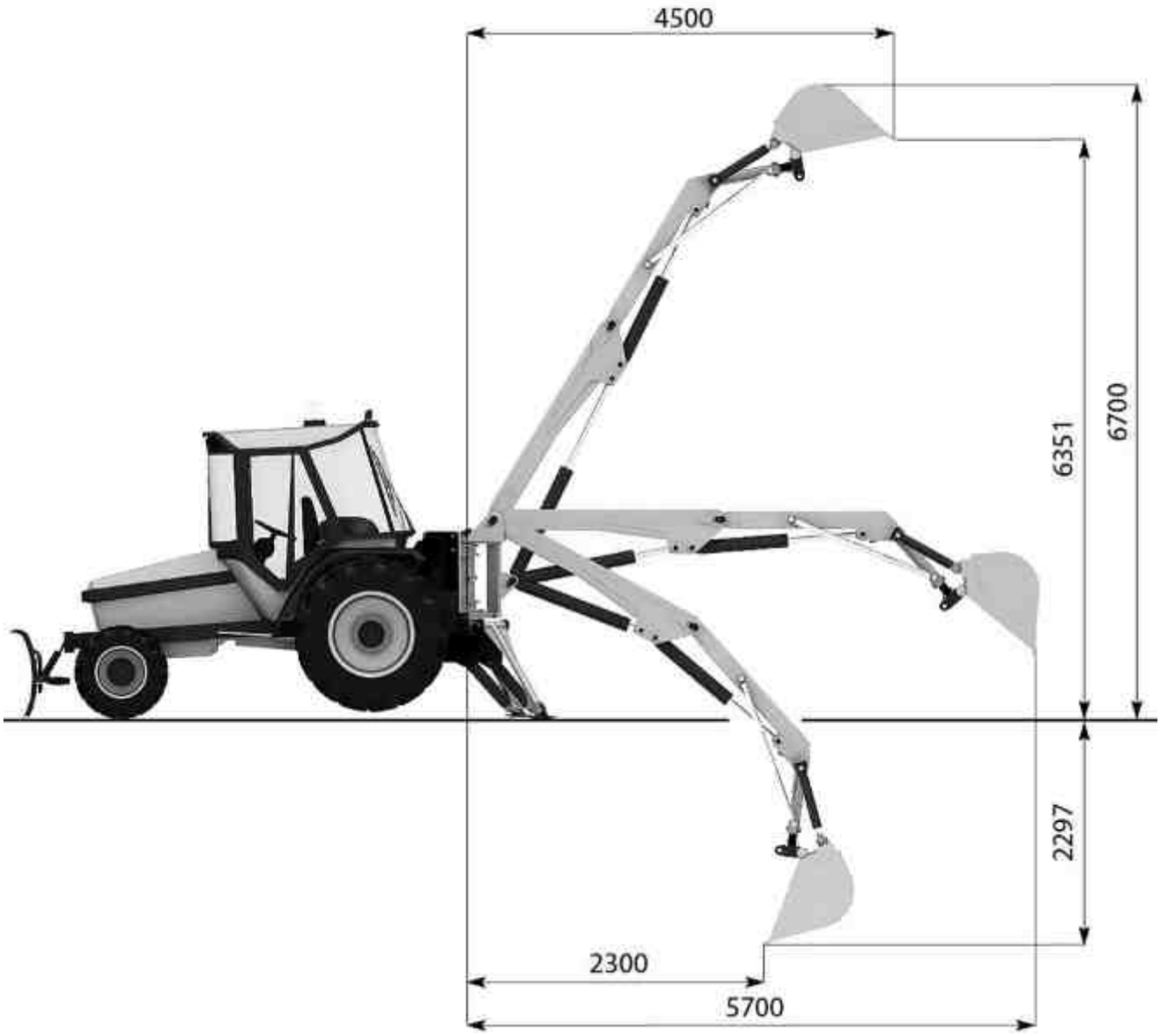

Fig. 2 – Outline dimensions for UEMA mobile machine
(second level equipped).

4. Operation

Operation of equipment is done from cockpit. Control station has two desks:

I. one – for travels direction of mobile machine, where are the commands for front equipments;

II. other – is disposed toward the back of the cockpit.

Operator's seat is rotated and fastened to one of two control panels in the cabin.

Joystick-type controls are electrically active and all equipment working car (with two or three double commands). Operator acts as levers for action: turning and lifting/lowering arm, lifting/lowering handle / work equipment and the function of closing/opening scoops, or other control equipment installed.

Separate is level for wedging and interchange ability of work equipments.

Coupling and decoupling of equipment is done by operator from cockpit, without the help of another person.

Hand commands are on the gear lever, clutch and brake service, safety and parking.

5. Conclusions

1. Multifunctional UEMA mobile is a machine loaded with propagation growing field of agriculture, forestry, livestock farm or construction and will cause the evolution of manufacturing equipment to forces, moments of inertia, speed and higher pressures, the closer monitoring the process parameters that decide the quality.

2. The latest innovations multifunctional machine focused on the need for the equipments of high productivity work with proprietary solutions, quick coupling systems for work equipment, uses simultaneous commands, monitors the operation and functions of mobile equipment, optical and acoustic surveillance, permanent.

3. Handling technology, agricultural products and construction materials, require individual work equipment hydraulic power that can be executed successfully by the manufacturer specializing in hydraulic power, Hydramold Iasi.

R E F E R E N C E S

1.* * * *Studiu ştiinţific şi tehnic al solutiilor pentru utilaj mobil UEMA,* Etapa I, Program 5 Inovare, Contract de Finantare 213/2008, H y d r a m o l d laº i, Noiembrie 2008.
2. www.caterpilar.usa.
3. www.danfoss.den.
4. www.jcb.uk.
5. www.komatsu.japan.
6. www.perkins.uk.
7. www.po-mmz.minsk.by.
8. www.pogruzka.com.
9. www.terex.usa.
10. www.theloaders.com

INSTALAȚII DE USCARE MOBILE ŞI ECOLOGICE DESTINATE ZONELOR MONTANE

MOBILE ECOLOGICAL DRYERS PURPOSEFULLY CREATED FOR HIGH LANDS

Erol Murad),Cristian Predescu), Gheorghe Rizoiu*), Cristian Sima***,
(*),Univ. POLITEHNICA Bucuresti , (**)C.C.I.VL., (***) Marvior Expert SRL

Abstract

In the paper it is presented a structural and energetic study of the use of bio mass as the only source of energy for mobile, autonomous power created for high lands. It was chosen a steam system of co generation with one level turbine which powers an alternator. The turbine is supplied from a steam tank where is burnt the gas produced by transforming into gas the biomass by means of TLUD method in a moduled gas producing.

Were studied 2 dryers USCMER with 4 and 10 m^2 holders which require minimum changes for connecting at the gas producing system. It was found that may be reached total power out turn of min.58% at gas producing coefficients of 1-22 with a null balance of CO_2 in conditions of complete power autonomy, which proves the energetic economic and ecological efficiency of the studied systems.

1. Introducere

In prezent, datoritã pericolului încãlzirii globale continue se pune din ce în ce mai accentuat problema reducerii emisiei de CO_2 în atmosfera terestrã.

Acest deziderat se poate realiza prin reducerea utilizãrii combustibililor fosili º i producerea de energie din surse regenerabile, cu bilanþnul sau negativ de CO_2: termo-solarã, foto-solarã, eolianã, hidro, biomasã, geo-termicã.

In multe regiuni de deal º i montane flora spontanã produce o mare diversitate de fructe, ciuperci etc. cu o mare valoare nutritivã º i medicinalã º i care se pot valorifica º i prin uscare în zonele de recoltare.

In prezent, din considerente tehnologice º i economice, se cere deplasarea capacitãþilor de deshidratare spre zonele de recoltare pentru a se reduce costurile de transport º i manipulare a produselor agricole fragile. Se tinde spre o decentralizare a operaþiunilor de uscare, ceea ce necesitã realizarea cu prioritate a uscãtoarelor de capacitãþi de producþie mici º i mijlocii, uº or de deplasat º i amplasat în zonele de interes.

In multe situaþii aceste zone de interes sunt izolate, nu au acces la reþeaua de energie electricã º i ca urmare se pune problema independenþei energetice a instalaþiilor de uscare, adicã a producerii de energie termicã º i electricã cu mijloace proprii.

Lucrarea are ca obiectiv analiza structuralã º i energeticã a unei instalaþii de uscare convectivã, mobilã, independentã energetic, destinatã zonelor montane.

Acest aspect se va studia în continuare din punct de vedere al utilizãrii biomasei ca sursã unicã de energie nepoluantã º i ecologicã, larg disponibilã în zonele montane cu vegetaþie spontanã, pentru alimentarea instalaþiilor de uscare de capacitãþi mici de uscare [7,9,10].

Pentru a se produce o concentraþie redusã de CO º i de particule materiale (PM) s-a ales varianta de gazeificare a biomasei cu procedeul Top Lit Up-Draft, denumit TLUD, la care procesul de ardere este cuplat direct la ieº irea din procesul de gazeificare [2,9,13, 15].

2. Producerea de energie termică şi electrică din biomasă

Pentru producerea de energie electricã în mod uzual se utilizeazã gazul, denumit în continuare gazgen, produs de gazogene pentru alimentarea motoarelor cu ardere internã m.a.s. sau m.a.c.. S-au fãcut încercãri de utilizare a motoarelor cu ardere externã de tip Stirling care au arãtat cã pentru o eficienþã energeticã ridicatã preþul acestor tipuri de motoare devine mare º i neeconomic.

In ultimii zece ani, pentru sistemele de cogenerare de puteri mici, s-au cercetat, proiectat º i realizat sisteme de cogenerare cu

motoare cu abur cu piston sau turbine cu acţiune. Acestea sunt cu motoare cu ardere externă care pot utiliza arzătoare de biomasă sau de gazgenla presiune atmosferică. Datorită însă randamentului redus al motorului cu abur aceste sisteme energetice sunt eficiente numai în regim de cogenerare energie electrică şi termică. Din acest punct de vedere uscătorul convectiv reprezintă un utilizatorul aproape ideal deoarece raportul de energii necesare electrică/termică este mai mic de 1/15 [4,11,12,14,16,17].

Modulul termic TLUD, prezentat în figura 1, este alimentat cu aer de un ventilator axial acţionat de un motor electric, de curent continuu, cu turaţie variabilă. Biomasa este introdusă în reactor şi se sprijină pe un grătar prin care trece, de jos în sus, aerul primar pentru piroliză şi gazeificare. Procesul de piroliză rapidă are loc în stratul, frontul, incandescent de piroliză care coboară continuu consumâd biomasa din reactor. Din piroliza rapidă rezultă gaze şi gudroane. Gudroanele trec prin stratul de cărbune incandescent, circa peste 700ºC, sunt cracate şi reduse total datorită căldurii radiate de frontul de piroliză şi de flacăra dispusă superior.

Gazele rezultate, denumite gazgen, se amestecă cu aerul secundar de ardere, preîncălzit de peretele reactorului, introdus în zona de ardere prin orificiile dispuse la partea superioară a reactorului. Amestecul, cu turbulenţă ridicată, arde cu flacără la gura superioară a modulului la temperaturi de circa 1200ºC.

Pentru reglarea puterii termice necesare instalaţiei de uscare debitele de aerul primar şi secundar sunt variate cu două clapete, cuplate mecanic, sau prin variaţia turaţiei ventilatorului.

Procedeul TLUD, la un exces optim de aer pentru gazeificare de 25% nu consumă în totalitate carbonul din biomasă, rămânând la terminarea procesului de gazeificare a şarjei cenuşă şi circa 20% cărbune vegetal. In zonele montane acest carbune rezidual încins ar putea produce incendii.

Pentru a se obţine o reducere completă a carbonului din biomasă rezultând în final numai circa 1% cenuşă trebuie să se reducă pierderile de căldură prin peretele reactorului pentru a se menţine în frontul de piroliză temeperatri de peste 900 oC. [13] şi [15].

Acest tip de procedeu a fost dezvoltat şi utilizat la sobele de pregătire a hranei în zone izolate, funcţionând foarte bine cu o mare varietate de biomasă locală. Un exemplu remarcabil prin performanţele energetice şi ecologice este soba portabilă produsă de PHILIPS, în care ventilatorul este alimentat cu energie electrică produsă de un termogenerator cu semiconductoare, montat sub grătar, fiind un exemplu tipic de gererator termic cu independenţă energetică.

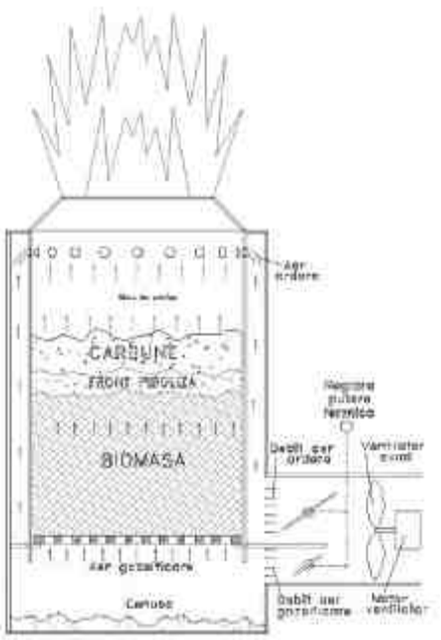

Fig.1 Schema funcţională a modului TLUD

3. Uscător convectiv cu cazan de abur alimentat cu biomasă

Deoarece consumul de energie termică este mult mai mare de cât cel de energie electrică, pentru scopul propus, s-a conceput un uscător convectiv care să funcţioneze cu un raport de energii electrică/termică cât mai mic.

S-a conceput o instalaţie de uscare convectivă cu schimbător de căldură (SC) apă caldă/aer şi ventilator acţionat electric, la 240Vca, cu turaţie fixă., corespunzătoare unei viteze optime de 2 m/s a agentului de uscare.

Modulul energetic este format dintr-un cazan de abur la 0,7 bar în care se arde gazgen-ul produs de unul, sau mai multe, module TLUD alimentate cu biomasă lemnoasă locală, mărunțită sub 50mm. Aburul produs este trimis în SC unde se condensează și încălzește agentul de uscare. Condensul este trimis înapoi în cazan cu o pompă de condens. Astfel se elimină pompa de circulație, iar pompa de condens la 0,7 bar consumă foarte puțină energie. Instalația este alimentată cu energie electrică din rețeaua monofazată de 240Vca.

S-au ales aceste tipuri de uscătoare deoarece USCMER-10/20 are o capacitate de producție dublă comparativ cu USCMER-4/8, împreună acoperind un domeniu de capacități de producție de 20..100 kg material de uscat pe o șarjă, domeniu în care se încadrează și loturile de material de uscat recoltate zilnic în zonelor montane.

Aceste uscătoarele fac parte dintr-o familie de uscătoare convective în care se utilizează același tip de casetă, cu dimensiunile 0,7 m x 0,45 m x 0,20 m.

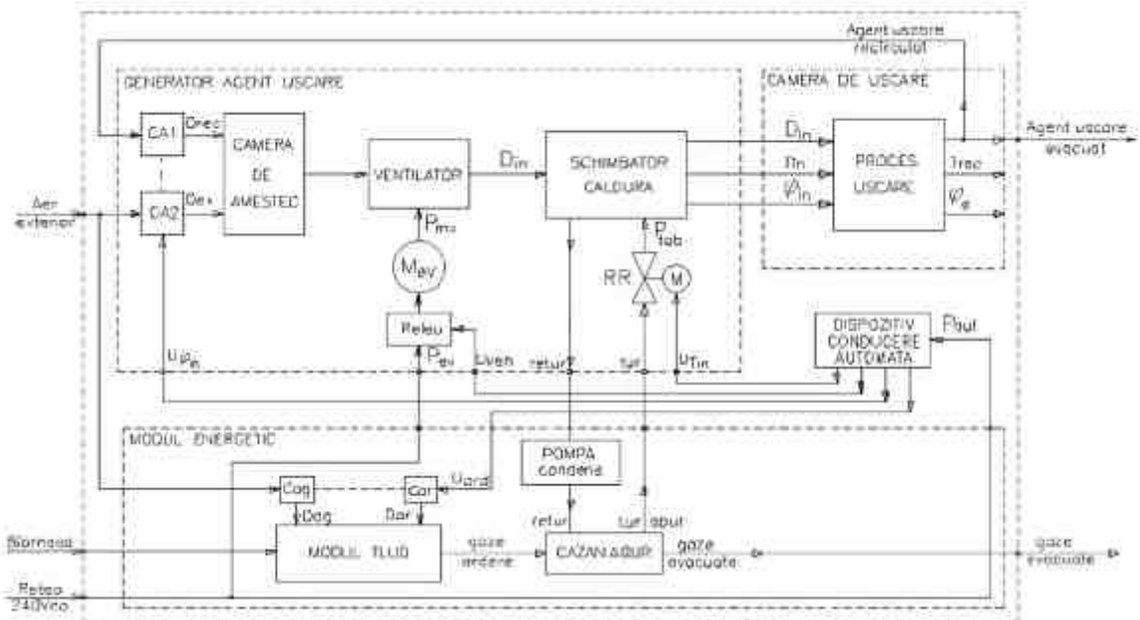

Fig.2 Schema bloc a uscătorului alimentat cu energie termică din biomasă

In figura 2 este prezentată schema bloc a unui uscător convectiv, din seria USCMER, alimentat cu energie electrică de la rețeaua de 240Vca și cu biomasă pentru energia termică, pe a cărui structură s-a dezvoltat varianta de utilizare în zonele montane izolate.

In timpul uscării unei șarje în instalație intră aer din exterior pentru ardere și pentru compensarea debitului de agent de uscare umed evacuat, precum și biomasă pentru producerea de energie termică.

Din instalație ies: debitul de agent de uscare umed evacuat și gazele arse evacuate din cazanul de abur.

In tabelul 1 sunt prezentate datele tehnice ale uscătoarelor analizate pentru utilizare în zonele montane: USCMER-4/8 și USCMER-10/20.

Caseta a fost proiectată optimal pentru ca uscătoarele să fie cât mai compacte, cu un raport volum uscător la suprafața casete minim.

Se observă ca raportul P_{en}/P_{tmed} este de 1/10 ceea ce indică că aceste uscătoare pot funcționa eficient economic cu un sistem energetic de cogenerare.

Tabel 1 Caracteristici tehnice uscătoare convective

Mărime	U.M.	USCMER 4/8	USCMER 10/20
Suprafaţa de poziţionare pe casete	mp	**4.00**	**10.00**
Putere termică specifică	kW/ m^2.cas	2.00	2.00
Putere mecanică specifică ventilator	W/ m^2.cas	60.00	70.00
Putere mecanică acţionare ventilator	W	240.00	700.00
Randament motor electric ventilator		0.90	0.90
Putere electrică acţionare ventilator	W	266.67	777.78
Debit specific aer uscare	(Nm^3/h)/m^2.cas	300.00	300.00
Putere electrică alimentare PLC	W	10.00	10.00
Putere consumată traductor	W	5.00	5.00
Putere consumată servomotoare	W	5.00	5.00
Număr traductoare		1.00	2.00
Număr servomotoare		1.00	1.00
Putere electrică automatizare uscător	We	20.00	25.00
Putere electrică necesară Pen	kW	0.29	0.80
Putere termică nominală Ptn	kWt	**8.00**	**20.00**
Putere termică minimă uscare - 20% Ptn	kW	1.60	4.00
Putere termicăămedie uscare Ptmed=40% Ptn	kW	3.20	8.00
Consum mediu energie termica	MJ/h	11.52	28.80
Raport puteri: Pen /Ptmed		1/10	1/10

Tabel 2 Regimul de funcţionare al uscătoarelor alimentate cu biomasă

Mărime	U.M.	USCMER 4/8	USCMER 10/20
Putere electrică necesară uscător Peu	kWt	0.29	0.80
Putere electrică acţionări gazogen+arzător	W	40.00	100.00
Putere electrică automatizare gazogen	W	20.00	20.00
Putere electrică necesară pentru instalaţia uscare Pen	kWt	0.35	0.92
Randament maxim cazan		0.90	0.90
Randament mediu cazan		0.8	0.80
Randament minim TLUD		0.80	0.80
Putere termică nominală cazan abur	kWt	8.00	20.00
Putere termică medie cazan	kW	3.20	8.00
Putere calorifică inf. biomasă (20% umid)	MJ/kg	15.00	15.00
Consum orar mediu biomasă	kg/h	1.20	3.00
Consum orar maxim biomasă	kg/h	2.67	6.67
Putere termică primară medie	kW	5.00	12.50
Nr. ore utilizare zilnic	h	12.00	12.00
Consum zilnic biomasă	kg/zi	14.40	36.00
Densitate aşchii	kg/dmc	0.30	0.30
Densitate pelete	kg/dmc	0.70	0.70
Volum alimentare modul TLUD (Di=210mm)	dmc	24.00	24.00
Masă aşchii în modul alimentare	kg	7.20	7.20
Masă pelete în modul alimentare	kg	16.80	16.80
Număr module TLUD active		1.00	2.00
Putere termică maximă modul TLUD	kW	8.89	11.11
Consum orar specific biomasă	kg/mp.h	76.99	96.24
Perioadă medie alimentare module cu aşchii	h	6.00	4.80
Perioadă medie alimentare module cu pelete	h	14.00	11.20

In tabelul 2 sunt prezentate datele de funcţionare ale uscătoarelor din familia USCMER alimentate cu energie electrică de la reţeaua monofazată de 240Vca º i cu biomasă pentru energie termică, referinţă pentru analiza comparativă cu regimul de independenţă energetică.

Cazanul cu abur este alimentat cu energie termicã de la module TLUD cu diametrul reactorului D_R=210 mm º i o înãlþime de H_R=700 mm. In modul, la o încãrcare, intrã un volum de 24 dm^3 biomasã lemnoasã mãrunþitã sub 50mm sau pelete. In funcþie de consumul orar specific maxim (kg/m^2h) s-au determinat numãrul de module necesare.

Pentru o funcþionare uº or de controlat º i cu emisii reduse se impune o valoare maximã de C_{hs}=100 kg/m^2h. Din aceastã condiþie rezultã cã este necesar un modul la USCMER-4/8 º i douã module la USCMER-10/20.

Din bilanþul energetic realizat rezultã cã aceastã structurã a instalaþiei de uscare poate asigura o funcþionare continuã cu pelete timp de 12 ore fãrã realimentare. Deoarece aºchiile au densitate mai micã perioada de realimentare cu acest tip de biomasã este de circa 6 ore, timpul mediu de uscare a unei º arje.

4. Sistem cogenerativ cu turbinã de abur

Pentru producerea de energie electricã º i termicã s-a utilizat un sistem de cogenerare cu abur de joasã presiune 6..10 bar produs într-un cazan de abur încãlzit cu gaze de ardere de la unul sau mai multe module TLUD. Cazanul de abur este de tip flach, cu maxim 4..5 g apã în circuitul de evaporare pentru evitarea destinderilor necontolate. Aburul produs alimenteazã o turbinã de abur cu acþiune monoetajatã, numitã º i cu impuls, cu mai multe duze de expandare, duze deschise continuu pentru evitarea creºterilor necontrolate de presiune în cazan [4], [5] º i [14].

Turbina acþioneazã un alternator cu ieºirea de 24Vcc la turaþii în domeniul 8000..10.000 rot/min, pentru a se reduce greutatea º i gabaritul, ceea implicã un randament mai scãzut al turbinei.

Alternatorul încarcã bateria de acumulatoare, necesarã pentru pornirea instalaþiei, care alimenteazã un convertor 24Vcc/240Vca la care este cuplatã instalaþia electricã a uscãtorului.

Turaþia turbinei este reglatã cu un robinet de reglare RR2 care variazã debitul de abur cu care întrã în turbinã în funcþie de sarcina convertorului de tensiune. Aburul rezidual, la 0,5 bar, este trimis în SC, printr-o supapã de sens, unde se condenseazã contribuind la creºterea randamentului general de cogenerare.

Reglarea temperaturii agentului de uscare la intrarea în camera de uscare se face cu robinetul de reglare RR1, care modificã debitul de abur care se introduce în SC printr-o supapã de sens º i se însumeazã cu debitul de abur rezidual al turbinei.

Utilizarea aburului la presiuni mari pentru alimentarea SC, care funcþioneazã la presiune atmosfericã, duce la scãderea randamentului general ceea ce face necesar utilizarea a douã secþiuni de cazan cu presiuni de lucru diferite, montate în serie pe traseul gazelor de ardere [1].

In prima secþiune la o temperaturã mai mare a gazelor de ardere, se produce abur supraîncãlzit pentru acþionarea turbinei. Secþiunea este alimentatã cu porþii reduse de condens de o pompã de dozare controlatã de presiunea aburului la intrarea în RR2.

In a doua secþiune se produce abur la 0,7 bar, care este trimis spre SC. Alimentarea cu condens se face cu o pompã de dozare controlatã de presiunea aburului la intrarea în RR1.

Reglarea puterii termice care intrã în cazan se reglează din regimul de funcþionare a modulelor TLUD în funcþie de eroarea de reglare a temperaturii agentului de uscare.

In figura 2 este prezentatã schema bloc a uscãtorului convectiv echipat cu sistemul energetic de cogenerare prezentat anterior.

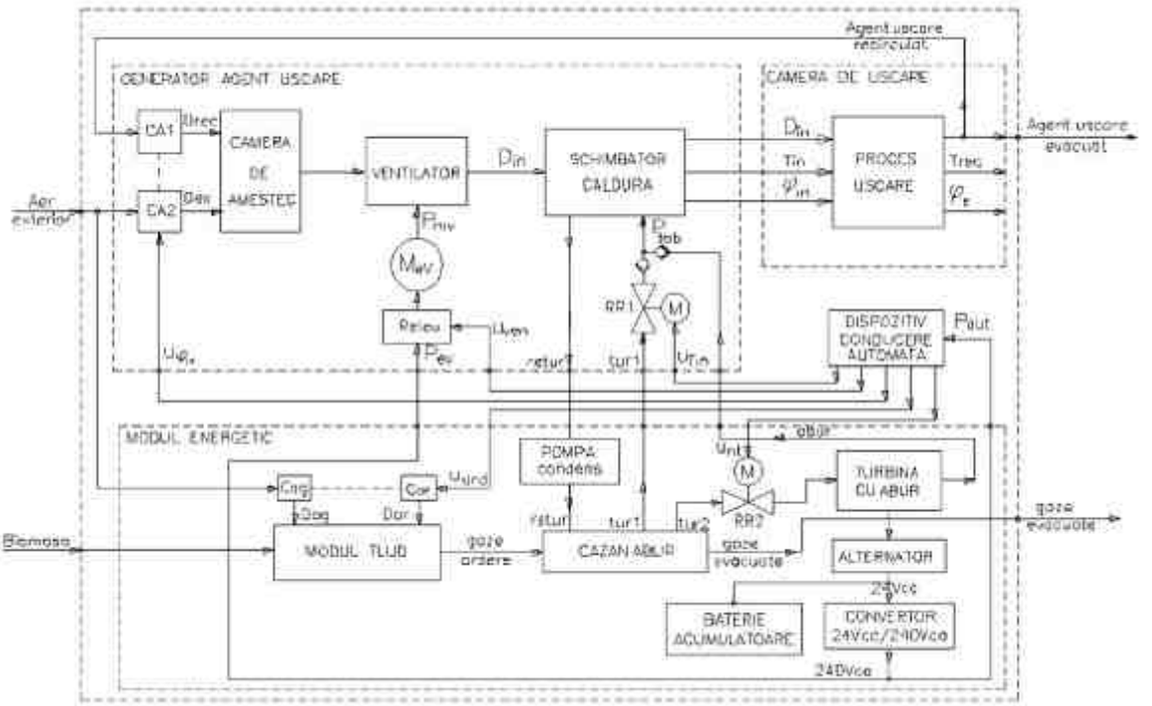

Fig.3 Schema bloc a uscătorului cu independența energetică

In tabelul 3 este prezentat rezultatul rulării programului de simulare a funcționării uscătoarelor din familia USCMER, alimentate cu energie provenită integral din biomasă.

S-a calculat necesarul de putere electrică P_{en} pentru întrega instalație, putere dată de convertorul de tensiune alimentat în timpul funcționării de la alternator, iar la pornire din bateria de acumulatoare.

In timpul unei șarje de uscare puterea electrică necesară este constantă ceea ce face ca puterea mecanică cerută de la turbina cu abur să fie constantă. Acest aspect indică că regimul de funcționare al generatorului de energie electrică este constant, ceea ce face face mai eficientă o optimizare funcțională, constructivă și economică a acestui subansamblu. Debitul de abur rezidual al turbinei este constant și ca atare se simplifică algoritmul de reglare automată a temperaturii agentului de uscare prin reglarea numai a puterii termice preluată de secțiunea cazanului care funcționează la 0,7 bar.

In bilanțul energetic nu s-a facut o distincție între cele două surse de abur, deoarece acesta s-a realizat în funcție de puterile necesare la ieșire și de randamente.

Pentru ca studiul să redea cel mai defavorabil regim de funcționare al sistemului analizat, s-au ales pentru randamentele energetice ale elementelor sistemului valorile minime, valori cunoscute din expolatarea curentă a sistemelor simulare. Acestă abordare a condus la obținerea de randamente totale de 58%, relativ mici pentru un regim eficient de cogenerare. În exploatarea curentă este foarte pobabil ca randamentul total de cogenerare să se apropie sau să depășească 70%. Valoarea mică a randamentului total se datorește în mare parte proceselor de conversie a biomasei în energie.

Procedeul de gazeificare TLUD a fost ales deoarece la consumuri orare specifice reduse, sub 100 kg/m^{2}h, generează concentrații foarte mici de CO și PM, în concordanță cu cerințele ecologice actuale.

Un alt avantaj al gazogenelor TLUD este faptul că ele se realimentează rapid în șarje, au o perioadă foarte scurtă de pornire și puterea termică produsă se poate regla eficient prin controlul debitului de aer de gazeificare D_{ag}. Aceste aspecte au condus la conceptul de modul TLUD care a fost adoptat și în acest studiu [3],[7] și [13].

Tabel 3 Regimul de funcţionare al uscătoarelor cu sistem de cogenerare

Mărime	U.M.	USCMER 4/8	USCMER 10/20
Putere electrică necesară uscator Peu	kWt	0.29	0.80
Putere electrică acţionări gazogen+arzător	W	40.00	100.00
Putere electrică automatizare gazogen	W	20.00	20.00
Putere necesară instalaţie uscare Pen	kWt	0.35	0.92
Randament convertor 24Vcc/240Vca		0.92	0.92
Putere electrică consumată la 24 Vcc	kW	0.38	1.00
Putere electrică nominala alternator de 24Vcc	kW	0.50	1.25
Randament alternator		0.85	0.85
Putere mecanică turbina abur	kW	0.59	1.47
Randament turbina abur (minim)		0.30	0.30
Putere termică consumată de turbină	kW	1.96	4.90
Randament recuperare energie abur ieºit din turbină		0.90	0.90
Putere termică reziduală ieºire turbină	Wt	1.24	3.09
Randament mediu cazan abur (minim)		0.8	0.80
Randament minim TLUD		0.80	0.80
Putere termică nominală cazan abur	kWt	8.73	21.81
Putere minimă cazan abur	kWt	1.96	4.90
Putere minimă uscare % din Ptn	%	15.44	15.44
Putere calorifică inf. biomasă (20% umid)	MJ/kg	15.00	15.00
Putere calorifică pelete (10% umid)	MJ/kg	20.00	20.00
Consum orar mediu biomasă	kg/h	1.47	3.68
Consum orar maxim biomasă	kg/h	3.27	8.18
Consum orar mediu pelete	kg/h	1.02	2.89
Consum orar maxim pelete	kg/h	2.45	6.14
Putere termică medie intrare în instalaţie	kW	6.13	15.33
Coeficient cogenerare Pen/Ptn		1/23	1/22
Randament general minim cogenerare	%	57.88	58.17
Nr. ore utilizare zilnic	h	12.00	12.00
Consum zilnic biomasă	kg/zi	17.66	44.16
Densitate aºchii	kg/dmc	0.30	0.30
Densitate pelete	kg/dmc	0.70	0.70
Volum alimentare modul TLUD	dmc	24.00	24.00
Masă aºchii în modul alimentare	kg	7.20	7.20
Masă pelete în modul alimentare	kg	16.80	16.80
Număr module TLUD active		1.00	3.00
Putere termică maximă modul TLUD	kW	10.91	9.09
Consum orar specific biomasă	kg/mp.h	94.47	78.73
Consum orar specific biomasă	kg/mp.h	70.85	59.05
Perioadă medie alimentare module cu aºchii	h	4.89	5.87
Perioadă medie alimentare module cu pelete	h	11.41	13.70

S-au luat în considerare două variante de alimentare cu biomasă:

A. Biomasă lemnoasă recoltată local, uscături căzute, crengi uscate etc., tocată în bucăţi cu lungimi mai mici de 50mm, cu o umiditatea sub 25%. Iniţial, biomasa se recoltează ºi se toacă, apoi este lăsată la uscare naturală cel puţin 3 zile însorite până ajunge la 20% umiditate.

Acest combustibil este cel mai ieftin, se obţine local în zona de recoltare a produselor de uscat ºi nu necesită transport. Această opţiune este consideratã ca biomasa de bazã pentru uscătoarele utilizate în zonele montane deoarece sistemul de cogenerare poate alimenta un mic tocător electic la 240Vca, cu care se poate realiza o independenţă reală.

Un aparent dejavantaj funcţional constă în perioada mai scurtă, de circa cinci ore, de realimentare a modulelor, dar această perioadă corespunde duratei medii a unei şarje de uscare şi ca urmare nu se reduc calitatea uscării şi capacitatea reală de producţie.

B. Pelete din biomasă lemnoasă sau agricolă care au o putere calorifică superioară fiind o biomasă compactată, sunt uşor de depozitat şi de manipulat, dar au un preţ de 4..5 ori mai mare decât biomasa preparată local. Avantajul funcţional constă în faptul că un modul poate funcţiona fără realimentare 12 ore, deci o zi de lucru.

5. Concluzii.

S-a studiat posibilitatea realizări de instalaţii de uscare convectivă destinate zonelor montane; instalaţii cu independenţă energetică reală, transportabile, eficiente tehnologic şi economic. S-a ales un sistem de cogenerare cu abur şi turbină cu acţiune, monoetajată, cuplată cu un cazan de abur alimentat cu energie termică produsă din biomasă prin procedeul de gazeificare TLUD. S-a analizat structura şi funcţionarea uscătoarelor din familia USMER, cu capacităţi mici de producţie, 4 şi 10 m^2 casete, care s-au cuplat cu sistemul de cogenerare pentru a se obţine independenţă energetică în condiţiile specifice din zonele montane.

S-au realizat programe de calcul a bilanţurilor energetice pentru variantele analizate rezultând că se poate obţine, în regim cogenerativ, un randament energetic total de minim 58%, cu valori mai mari pentru sistemele reale. Pentru producerea de energie a fost luată în considerare, în principal, biomasa locală, recoltată, tocată şi uscată liber, cu care se poate realiza o independenţă energetică reală în zonele montane.

Sistemul de cogenerare, cuplat cu uscătorul USCMER-10/20, care produce 1 kW putere electrică şi până la 20 kW energie termică poate fi utilizat la staţionar, în perioadele reci, când nu se mai usucă plante, pentru asigurarea energiei necesare pentru procese tehnologice şi locuinţele izolate din zona motană.

Astfel creşte perioada de utilizare a instalaţiei, recuperându-se mai rapid investiţia iniţială.

Bibliografie

[1]. Badea Adrian, s.a., Echipamente şi instalaţii termice, Editura Tehnică, Bucureşti, 2003

[2]. Belonio Alexis, Rice husk gas stove handbook, College of Agriculture, Central Philippine University, 2005

[3]. Daugherty E. Christian, Biomass Energy Efficiency – Analized trough a Life Cycle Assesement, Thesis, LUND University, feb 2001

[4]. Gruendl Andreas, Hoffmann Bernhard, Device for recovering electric energy from the exhaust heat of an internal combustion engine in a motor vehicle and method for recovering electric energy from the exhaust heat of an internal combustion engine in a motor vehicle, Brevet invenţie, WO 2008-089972

[5]. Kassner Daniel, Offenlegungsschrift, Brevet invenţie, DE 2007-045841

[6]. Mujumdar A.S. (Ed.). Handbook of Industrial Drying, 2nd Edition, DEKKER,New York,1995.

[7]. Murad Erol, Producerea de energie prin gazeificarea resurselor regenerabile de biomasă agricolă, INMATEH- 2002, România, Bucureşti, mai 2002

[8]. Murad Erol, Optimisation of biomass gasification load regime, Conferinţa Internaţională ENERGIE - MEDIU CIEM 2005, UPB, Bucureşti oct. 2005[9]. Murad E., Badileanu M., Lica C., Balacianu G., Optimizarea instalaţiilor de uscare convectivă a legumelor şi fructelor alimentate cu energie termică produsă din biomasă agricolă; INMATECH-2007, Bucureşti, mai 2007[10]. Murad Erol, Safta Viorel, Haraga Georgeta, Biomass regenerating source of thermal energy for drying installations, Conferinţa ISIRB, Hunedoara aprilie 2009

[11]. Myers P.F., The Cyclone Engine Empowers The Biofuels Revolution, Advent Power Systems, Inc., September 2007

[12]. Pospisil Jiri, s.a ., Small scale combined production of electricity, heat cool and process steam, International Journal of Energy and Environement, Volume 1, 2007, pag. 211-223, NORTH ATLANTIC UNIVERSITY UNION

[13]. Reed T.B., Anselmo E., Kricher K, Testing and Modeling the Wood-gas Turbo Stove, Confernce: Progress în Thermochemical Biomass Conversion, Tyrol, Austria, sept. 2000

[14]. Schoell Hary, Heat Regenerative Engine, Brevet Invenţie, US 7,080,512, 2006 [15].Singh V.K., Raman P, Design and Developement of an Energy Efficient Turbo Stove: a "Micro-gasifier" based on Biomass Gasification Technology, Proceedings of International Conference on Energy and Environment, march 2009, Chandigarh,India

[16]. *** COGEN MICROSYSTEMS, University of Adelaide Commerce and Research Precinct, Adelaide, Australia, 2006

[17]. *** Micro CHP systems: State of art, Austrian Energy Agency, Viena, march 2006

GRAPĂ CU DISCURI INDEPENDENTE DESTINATĂ TRACTOARELOR DE 120÷220CP

HARROW WITH AUTONOMOUS DISKS FOR TRACTORS OF 120÷220 HP

dr. ing. Nicolae CONSTANTIN*, Prof.on.dr. ing. Iosif COJOCARU*
Prof.dr. ing. Ion PIRNA*, ing.Ion LEU**

** INMA Bucuresti*
***MAT Craiova*

Abstract: *The harrow with autonomous disks develops a new and performant mechanization technology which includes soil works, like clearing land of weeds and-or preparing germinal beds on fresh plough lands or on unploughed lands where are created summer autumn cultures. The technology may be applied at an adequate standard, low costs and energy consumption, comparing with that performed by classic harrows with disks, for wheeled tractors of 120 220 HP. The new equipment named GD 4 reaches work depths of 6-8 cm at clearing soils and of 10-14 cm at preparing germinal beds on fresh ploughed land or unploughed lands, the width being of 4 m and the working capacity of about 3 ha-h.*

Key words: technical equipment, clering soil and preparing germinal beds, autonomous disks, compact structure

1. CONSIDERATII GENERALE

Aproximativ 37% din suprafaţa agricolă a ţării este ocupată de solurile cu culturi ce se înfiinţează vara-toamna, restul fiind teren arabil destinat culturilor de primăvară. Dacă pentru înfiinţarea culturilor de primăvară există utilaje agricole (combinatoare C2,6; C3,9; CPGC4 etc) pentru pregătit terenul în vederea semănatului, în schimb pentru cele destinate înfiinţării culturilor de vară-toamnă, gama de maşini agricole existentă nu este corespunzătoare sau este insuficientă.

Plantele semanate sau plantate pe un pat germinativ corespunzator se dezvolta mai bine decât plantele la care patul germinativ este asezat pe bulgari care îngreuneaza (întrerup capilaritatea) patrunderea apei la radacinile plantelor. La ora actuala, pregatirea unui pat germinativ pe araturi de vara-toamna, la noi în tara, se executa cu grape cu discuri usoare (în majoritatea cazurilor) destinate tractoarelor de 65 CP, cu combinatoare specializate sau cu grape grele aduse din import, destinate tractoarelor de puteri mari. Pregatirea patului germinativ cu grape cu discuri usoare conduce la un consum ridicat de combustibil, la cresterea fortei de munca, mărirea duratei campaniei de lucru şi la executarea unui pat germinativ necorespunzător în condiţii cu umiditate scăzută ale solului. În acest context, se urmăreşte promovarea unei grape cu discuri şi organe (suplimentare) de mărunţire, destinată tractoarelor de puteri mari, în vederea perfectionării tehnologiei de dezmiriştit şi pregtit patul germinativ pe arături proaspete în care se înfiinţează culturile de vară-toamnă.

Lucrările solului executate de grapele cu discuri grele sunt caracterizate prin rezultate bune de mărunţirea, amestecarea şi mobilizarea solului, realizate în condiţii de umiditate scăzută a solului. Din punct de vedere constructiv şi funcţional graplele cu discuri prezintă avantajul de a trece uşor peste eventualele obstacole ce apar în procesul de lucru, iar organele active, de tip discuri sferice, au un grad scăzut de uzură, ca urmare a faptului că solicitările în procesul de lucru sunt distribuite pe toată lungimea tăişului.

2. UTILAJE AGRICOLE NOI IN TEHNOLOGIILE DE LUCRARE A SOLULUI

Noua tehnologie de mecanizare cuprinde lucrarea solului prin dezmiriştit şi/sau pregtit patul germinativ pe arături proaspete sau pe

teren nearat în care se înfiinţează culturile de varã-toamnã. Arãturile trebuiesc grãpate de îndatã ce au fost efectuate deoarece acestea se întãresc, nu se pot mãrunţi şi cresc pierderile de apã prin evaporaţie. Prelucrarea arãturilor cu grapele cu discuri se executã diagonal pe direcţia brazdelor pentru a netezi coamele acestora.

Ţinând seama ca în prezent în România se fabrica tractorul de 195CP, iar unii fermieri au importat tractoare de 100-240CP, a aparut ca necesara realizarea şi introducerea în fabricatie la agenti economici interesati, a unor utilaje, care în prezent se aduc din import, pentru tractoarele din aceasta gama.

În acest sens au fost realizatã şi încercatã grapa cu discuri independente destinat tractoarelor de mare putere, tip GD-4, care are o constructie mult redusa fata de cele ale grapelor cu discuri.

Grapa cu discuri independente GD-4 este de tip purtat pe ridictoarele hidraulice ale tractoarelor de 120-220 CP pe roi, categoria a III-a STAS 11022-91. Grapa se compune din urmãtoarele ansambluri principale: şasiu; baterii cu discuri (fatã+spate); tren de transport; tãvãlugi de nivelare şi mãrunţire; instalatie hidraulicã.

2.1. Destinaţia şi domeniul de utilizare

Grapa cu discuri independente GD-4 executã la o singurã trecere:

- dezmiriştirea;
- pregãtirea patului germinativ pe arãturi proaspete sau pe teren nearat în care se înfiinţeazã culturile de varã-toamnã, în vederea semãnatului cerealelor pãioase şi a plantelor prãşitoare la adâncimi de lucru cuprinse între 10÷14 cm.

Se utilizeazã vara-toamna (în anumite situaţii primãvara) pe araturi proaspete, în toate tipurile de sol aflate pe terenuri plane sau cu pantã pânã la 6^0. Arãturile trebuiesc grãpate de îndatã ce au fost efectuate deoarece acestea se întãresc, nu se pot mãrunţi şi cresc pierderile de apã prin evaporaţie. Prelucrarea arãturilor cu grapele cu discuri se executã diagonal pe direcţia brazdelor pentru a netezi coamele acestora

Lucrează în agregat cu tractoarele pe roti de 120-220 CP prevăzute tiranţi şi/sau cu bara de tractiune categoria a III-a SR ISO 730-1+C1:2000;

2.2. Descrierea constructivă şi funcională

Grapa cu discuri independente GD-4 este un utilaj agricol tractat şi/sau purtat pe tiranţii laterali (categoria a III-a SR ISO 730-1+C1 :2000) ai tractoarelor de 120-220 CP pe roţi.

Fig.1 Vedere lateralã a grapei Gd4 -pozitie de lucru şi de transport

Fig. 2 Vedere din spate a grapei Gd4 -pozitie de transport

Sasiul grapei are în componenţã bara şi proţapul de tracţiune, cadru central şi douã cadre laterale pe care se montează bateriile cu discuri, trenul de transport şi tãvãlugii de mãrunţire şi nivelare a solului.

Proțapul de tracțiune şi bara de tracțiune sunt realizate în varianță sudată din țeavă pătrată și plăci groase din tablă. Ele se fixează de cadru cu ajutorul unor bolțuri, șaibe și plinturi.

Cadrul central al grapei este o construcție sudată, din țevi pătrate, sub forma unui dreptunghi, rigidizat cu plăci de întărire. Pe părțile laterale ale cadrului sunt sudate patru lagăre pentru montarea cadrelor laterale, iar în zona centrală sunt sudate două lagăre pentru fixarea trenului de transport.

4. ÎNCERCĂRI ÎN CONDITII DE CÂMP-LABORATOR SI DE EXPLOATARE

Încercrile în condiții de casă, câmp-laborator și de exploatare s-au efectuat în agregat cu tractorul ZIMBRU (T195), s-au efectuat în iulie- octombrie 2009, în conformitate cu procedurile specifice de încercare PSpI-01.10.29 "Încercarea grapelor cu discuri" și PSpI-01.00.33 "Determinarea indicilor energetici pentru agregatele agricole".

La încercările din perioada de var-toamnă, grapa cu discuri independente **GD-4**, figura 3, a realizat lucrări de calitate, indici calitativi de lucru și energetici corespunzători.

Bateria cu discuri (fată+ spate) are în componență o semibaterie centrala și două semibaterii laterale, care se rabat, pe verticală, pentru pozitia de transport. Fiecare semibaterie se fixează pe cate o teava patrata prin intermediul unor flanșe si inele din cauciuc. Bateriile sunt din formate discuri crenellate, lagăre cu rulmenți, ax de fixare și brat de susținere. Discurile au diametrul exterior de 660 mm și sunt executate din tablă manganoasă.

Trenul de transport al grapei este conceput pentru deplasarea grapei pe drumurile publice și are în componență un cadru sudat și două roți cu pneuri.

Tăvălugul de mărunțire şi nivelare se montează în spatele bateriilor cu discuri cu scopul de a mărunți, nivela și reașeza suplimentar solul prelucrat de bateriile grapei. Pentru transport, tăvălugii se pliază în plan vertical pană se încadrează în gabaritul de transport de 3 m.

3. CARACTERISTICI CONSTRUCTIVE ȘI FUNCȚIONALE

3.1. Caracteristici dimensionale şi constructive

- Tipul grapei	tractată
- Tractor necesar, CP	120-220
- Lățimea de lucru, m	max.4
- Lățimea de gabarit în transport, m	3,0
- Nr. discurilor	32
- Distanța între discuri, mm	220

3.2. Caracteristici funcționale

- Adâncimea de lucru, cm:	10 - 14
- Viteza în transport, km/h	4 - 8

Fig. 3. Aspect din timpul lucrului cu grapa cu discuri independente GD-4

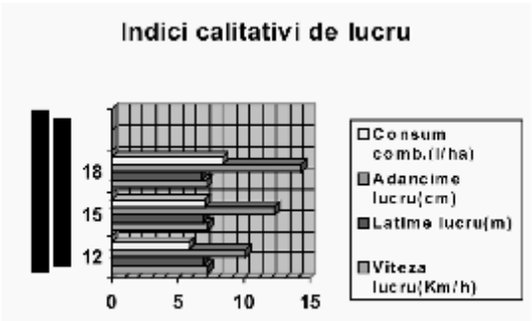

Fig. 4. Variaţia indicilor calitativi de lucru cu unghiul de atac

Grapa cu discuri independente **GD-4** a prezentat o bună stabilitate în plan orizontal şi vertical. Variaţia indicilor calitativi de lucru cu unghiul de atac este prezentată în diagrama din figura 4.

Gradul de mărunţire a solului, G_m [%]

Principalul indicator calitativ de lucru, al grapei îl reprezinta **gradului de mărunţire a solului.** Pentru determinare s-a delimitat o probă de sol cu dimensiunile de 1m x 1m (folosind rama metrică şi adâncimea egală cu adâncimea de lucru a grapei). Din proba respectivă s-a separat fracţiunile de pământ cu dimensiuni mai mici de 50 mm de bugării şi cu dimensiuni mai mari de 100 mm. Gradul de mărunţire reprezintă proporţia în greutate a fracţiunilor de sol cu mărunţire satisfăcătoare, respectiv cu dimensiunile bulgărilor de maxim 50 mm, raportată la masa totală a probei de pământ, calculată cu ajutorul relaţiei:

$$G_w = \frac{\sum_1^n \frac{M_{ci}}{M_{ti}}}{n} \cdot 100$$

unde: M_{ci} - greutatea măsurată a bulgărilor de sol cu dimensiunea maximă convenţională mai mici de 50 mm din proba de sol luată, [kg];

M_{ti} - greutatea măsurată a întregii probe de sol luată, [kg].

Cântăririle s-au făcut cu un cântar portabil,cu o eroare relativă admisibilă de 1%.

Principalii indici calitativi de lucru şi energetici realizaţi sunt:

- gradul de mărunţire al solului G_{ms}=75,21...80,25%;
- gradul de încorporare în sol a resturilor vegetale G_v=95,23-96,61%;
- gradul de afânare G_{as}=20,15...26,27%;
- adâncimea medie de lucru a_{med} =10,23…14,25 cm ;
- lăţimea medie de lucru B_{med} =3,82…3,96 cm ;
- viteza de lucru V_e=6,75...7,20 km/h;
- capacitatea de lucru la timpul efectiv W_{ef}=2,75...2,88 ha/h;
- consumul de combustibil Q=7,32...8,49 l/ha.

5. CONCLUZII

Din analiza datelor obţinute la încercări au rezultat următoarele concluzii:

- Grapa cu discuri independente **GD-4** pentru tractorul de 120÷220CP pe roţi a fost realizată cu două baterii paralele şi cu organe suplimentate de mărunţire, cu lăţime de lucru de 4 m;

- Grapa cu discuri independente **GD-4** se utilizează vara-toamna (în anumite situaţii primăvara) pe arături proaspete, în toate tipurile de sol aflate pe terenuri plane sau cu pantă până la 6^0

- Grapa cu discuri independente GD-4 execută la o singură trecere:

▪ dezmiriştirea;

▪ pregătirea patului germinativ pe arături proaspete sau pe teren nearat în care se înfiinţează culturile de vară-toamnă, în vederea semănatului cerealelor păioase şi a plantelor prăşitoare la adâncimi de lucru cuprinse între 10÷14 cm

- Grapa cu discuri independente **GD-4** este robustă, simplă din punct de vedere constructiv şi funcţional, este uşor de manevrat, întreţinut şi exploatat în procesul de lucru;

- Grapa cu discuri independente **GD-4** este de tip tractatã sau purtatã, operaþia de cuplare putând fi executată de către un singur om (mecanizatorul);

- Grapa cu discuri independente **GD-4** a realizat lucrări de calitate, cu un grad ridicat de mărunţire a solului şi de îngropare a resturilor vegetale. Coeficienţii de siguranţă tehnică şi tehnologică au înregistrat valori ridicate, nefiind necesari timpi pentru remedierea defecţiunilor de exploatare.

6. BIBLIOGRAFIE

1. Cojocaru Iosif, şi col - *Noi soluții tehnice în concepția grapelor cu discuri.* Revista "Mecanizarea agriculturii", nr.7 Bucureº ti, din 2000

2. Popescu Traian, Cojocaru Iosif, Constantin Nicolae, Toanchina Petre, Buciu Florian, Maican Constantin - *Studii si cercetari privind realizarea unei familii de grape cu discuri usoare purtate pentru tractoarele de 30, 45 si 65 CP pe roti*, INMA Bucuresti, 1993

3. Popescu Traian *Contribuții tehnice şi experimentale privind îmbunătățirea organelor de lucru de la grapele cu discuri.* Teza de doctorat ASAS-Bucureº ti, 1982

4. Dranafield P. şi alți *Influența adâncimii, viteza de lucru şi a unghiurilor de aşezare a uneltelor pentru lucrat solul asupra mărimilor care compun rezistența solului,* Jurnal Agricultural, Engineering Rosearch, nr.3, 1964

5. **Hann M. J., J. Giessibl**, - *Force Measurements on Driven Discs*, Journal of Agricultural Engineering Research, 1998, volume 69, number 2, 149 - 157;

6. Kolozsvari Constantina, Constantin N. - *Echipament de lucrat solul prevăzut cu discuri şi organe suplimentare de mărunțire şi nivelare destinat tractoarelor de mare putere* Revista "Mecanizarea Agriculturii", nr.3/2006, Bucureº ti.

7. A.Şandru, M. Bădescu, L.Şandru," - *Reducerea consumului de energie prin folosirea rațională a agregatelor agricole*", Editura Scrisul Românesc, Craiova, 1982.

EXPERIMENTAL INSTALLATION FOR "T" JONCTIONS TUBE HIDROFORMING AT HIGH PRESSURES

INSTALATIE EXPERIMENTALA PENTRU HIDROFORMAREA CU INALTA PRESIUNE A TUBURILOR IN FORMA DE "T"

Constantin CHIRITA*, Gheorghe PLESU*, Mircea FRUNZA**, Corneliu Constantin DUCA*** and Alexandru COPTU*

*Technical University "Gheorghe Asachi", Iasi, Romania
** National Inventics Institute, Iasi, Romania
*** Hydramold, Iasi, Romania

Abstract. *The paper describes a new technology for "T" shapes manufacturing through hydroforming using high pressures in to a mould controlled with two "digital" hydraulic axes. The technology solves one of the main problems regarding the diminution of the thickness the material, through a proportional compensation of the shape with two normal high pressure valves acting like hydraulic axes.*

Key words: *hydroforming, high pressure, hydraulic, tubes, axes*

1. Introduction

The paper relates to a new technology for "T" shapes manufacturing through hydro-forming using high pressures into a mould controlled with two proportional hydraulic axes. The technology solves one of the main problems regarding the diminution of the thickness the material, through a proportional compensation of the shape with two proportional hydraulic axes.

The hydroforming processes involves the deformation of a sheet of billet under the forces results from a pressure which is applied under control to the active surfaces.

In the past the old technologies are bounded, for hidroformation, to the maximum pressures till 30 MPa. The evolution of the hydraulic systems allow to use for this technology higher pressures between 70 to 150 MPa and sometimes even higher.

The principle of tubes hydroforming is showed in the figure 1. Faze 1 a tube is introduced and fixed in to a mould. Two pistons with a special sealing system fix the tube at the required position and seal it. A special liquid is introduced in the tube till the pressure of 20 25 MPa. At this point, regarding the material of the tube starts the deformation processes. To avoid the diminution of the thickness of the tube walls the pistons are moving one to each other with a controlled speed and force. In the faze 3 the tube take the final form. Next a very high pressure is applied for a couple of seconds to calibrate the sheet of billet to his final form. In the faze 4 the inside pressure is decreased with a controlled slope to avoid the collapse of the new manufactured piece.

After that both pistons are retracted and the mould is opened to relieve the oil from inside the tube.

The process seems to be simple but the main problem is to control the speed, distance and force of the pistons as well as the deforming process is making at approximately constant volume and the walls of the piece are kept at a desired thickness.

This kind of control on a single direction is named proportional hydraulic axe.

Normally this proportional axe is not new and is developed with proportional hydraulic valves.

In our case proportional valves can not be used due to high pressure from the system, their max pressure limit is up to 32 Mpa.

To find a solution to our problem we imagine a digital system which copy the behaviour of the proportional valve and make all desired functions with two high pressure valves,

a National Instruments data acquisition and command interface and a computer.
The construction of the mould is posted in figure 2. We can see the frame of the press, the two actuators used for proportional axes, two actuators used to close the mould and to compensate the action of the internal pressure of the liquid, and the scheme of the hydraulic equipment.
In the figure is posted also the principal piece of the system, the pressure multiplier. This equipment will be described in detailed in the following chapters.
The fluid used for the process can be extreme pressure hydraulic oil or water combined with corrosion inhibitors.

2. Experimental installation

In the first step all laboratory installation use hydraulic oil but in the industrial engineering stage where high volumes of liquids are used is preferable to use water.

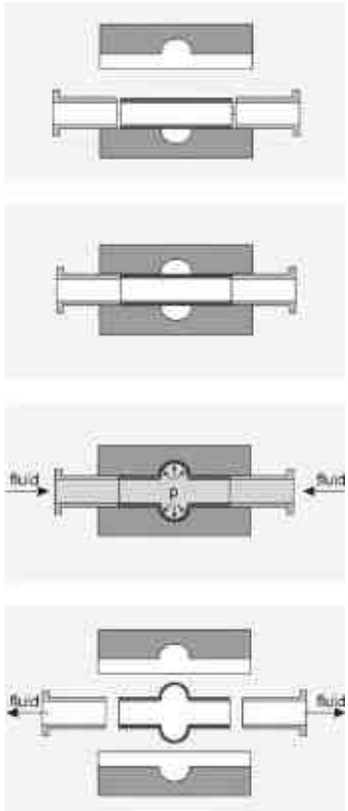

Fig. 1. Tube hydroforming fazes

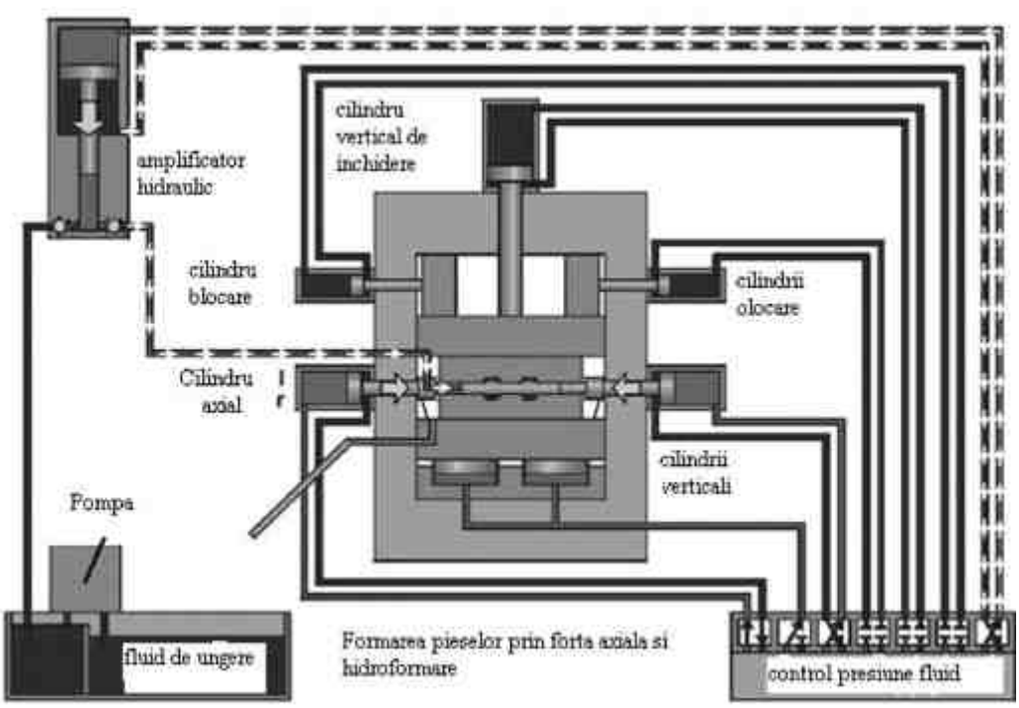

Fig. 2 The principle of tube hydroforming

The mould has a superior plate and an inferior one fitted with elements including the connectors to the hydraulic equipment.

In the figure 4, 1 is the mould inferior plate, 2 is the guiding system for the pounces 6, 3 are two nuts for the pounces, 4 is a restraining block, 5 are the guiding columns, 7 is a hydraulic actuator with the role of create a contra force for the ”T” shape of the sheet of billet and 12 is the “T” shape manufactured with this technology.

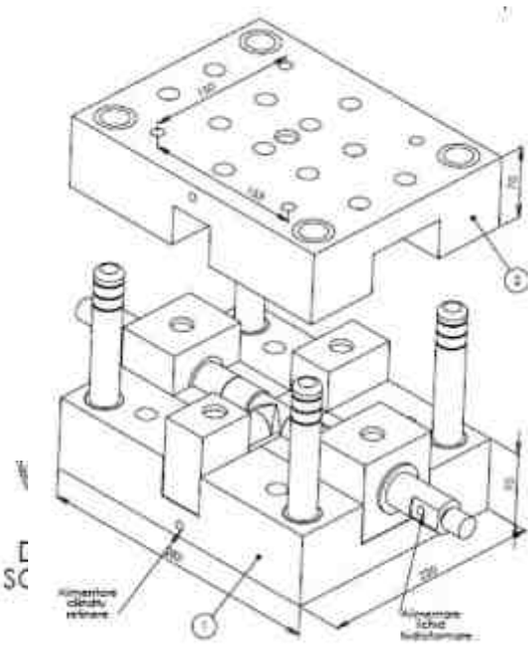

Fig. 3 Hydroforming mould for “T” tubes

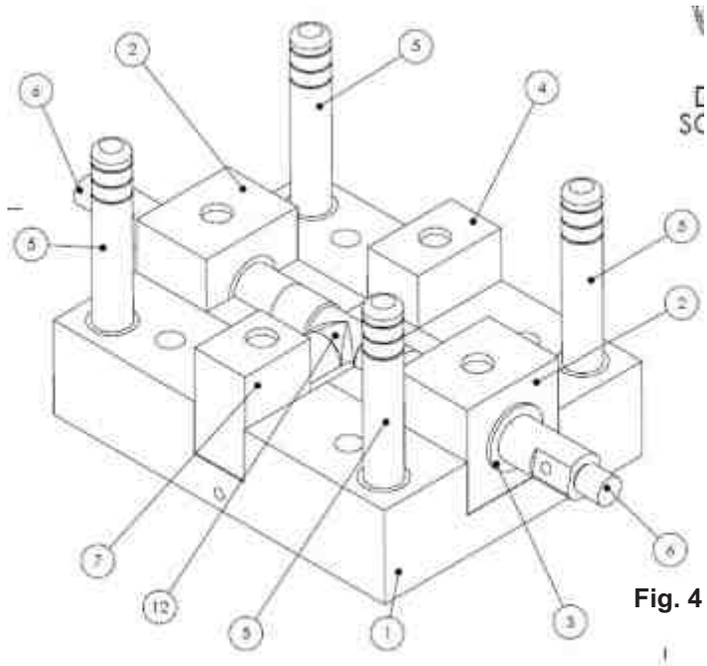

Fig. 4 The assembly of the Inferior plate of the Hydroforming mould for “T” tubes

In the figure 5 is presented the hydraulic diagram of the experimental laboratory equipment. As is presented in the diagram the system is powered by a hydraulic pump assisted by a limitation pressure valve which control the pressure in the principal circuit.
At this point a second valve D1 directs the oil to the distribution area where we find 4 valves. Valve D5 is used for open and close the mould via hydraulic actuator of the 70 t press. Valve D5 is controlling the position of the small internal cylinder from the “T” part of the mould. This cylinder has the role to create a restraining force which controls the speed of the deforming process. At the beginning of the hydroformation process the starting position of the cylinder is retracted.

After the insertion of the tube in the mould, the cylinder is extended till the contact with the middle part of the tube. From this moment to all hydroforming process the valve D4 is closed.
At this stage the valves D3 and D6, our two hydraulic axes, seal the tube by moving the two elements 6 from the picture 4 into the mould and throw the open extremity of the tubes.
The next step is to connect the elements 6 to the oil source and to introduce inside the tube a pressure till the value of approximately 22 MPa. At this pressure the deformation process is starting and for compensation is necessary to compress the tube with the elements 6. This is the moment where we fund a solution to replace the proportional hydraulic axes with a high pressure valves controlled by a National Instruments interface to a computer.

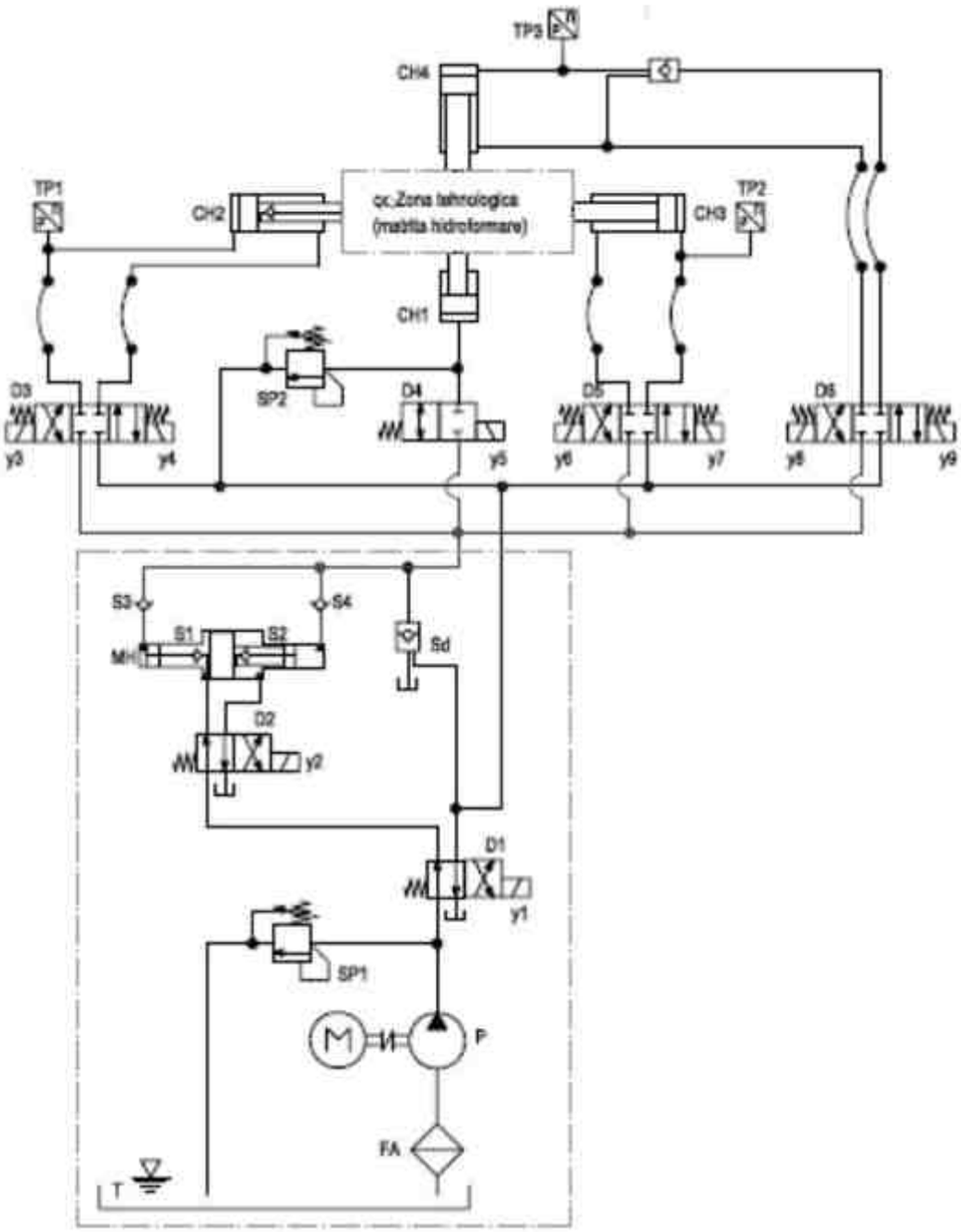

Fig.5 Hydraulic diagram of the experimental equipment

Top plate Down plate

Fig. 6 Mould for tube hydroformnation

Fig. 7 Sheet billet tube and the "T" hydroformating element

Continuing to press the tube the inside pressure will grow up to 150 200 MPa till the tube is deforming to final form. At this point a very high pressure is applied to the tube for calibration.

Another important think is related to decompressing the tube. A quick degreasing of the pressure in the tube makes the form to collapse. So opening the inside circuit will be a challenge in order to preserve the gated form.

Also the speed of rising to the final form is very important because a material must have the time to flow and to change the form at constant volume.

The main characteristics for the high pressure hydraulic equipment are posted in figure 7. We can observe that the equipment working at constant power and at 1.5 Kw and assure 6 l/min till 13Mpa and 0.5 l/min at 70 Mpa.

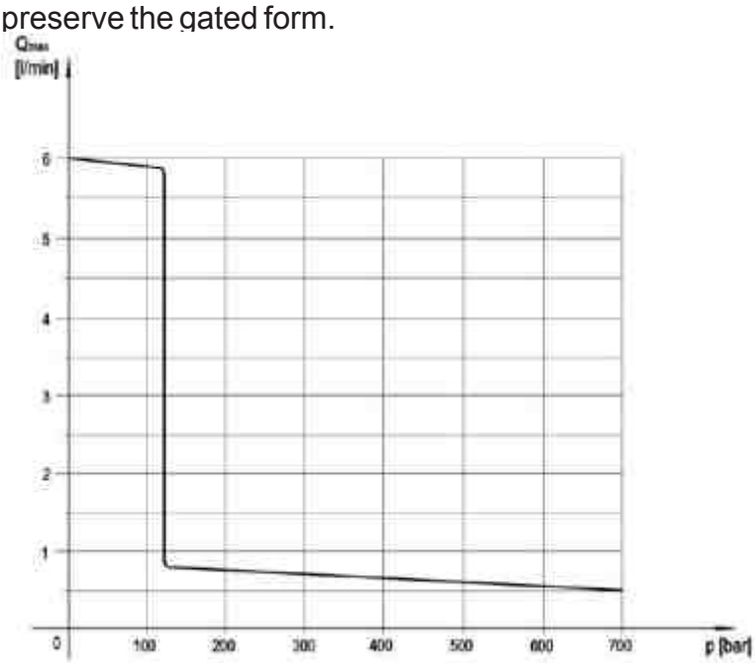

Fig. 7 Static working characteristic for high pressure hydraulic equipment

Technical Characteristics of the main high pressure unit:

• Max. pressure:	first step	110 [bar]
	second step	700 [bar]
• Oil flow	first step	6 [l/min]
	second step	0,5 [l/min]
• Oil volume		20 [l]
• Gear Pomp, geometrical volume		4 [cm^3/rot]
• Pressure gauge AV		0 ÷ 1000 [bar]
• Aspiration filter		90 [μm]
• Oil type		TELLUS T46

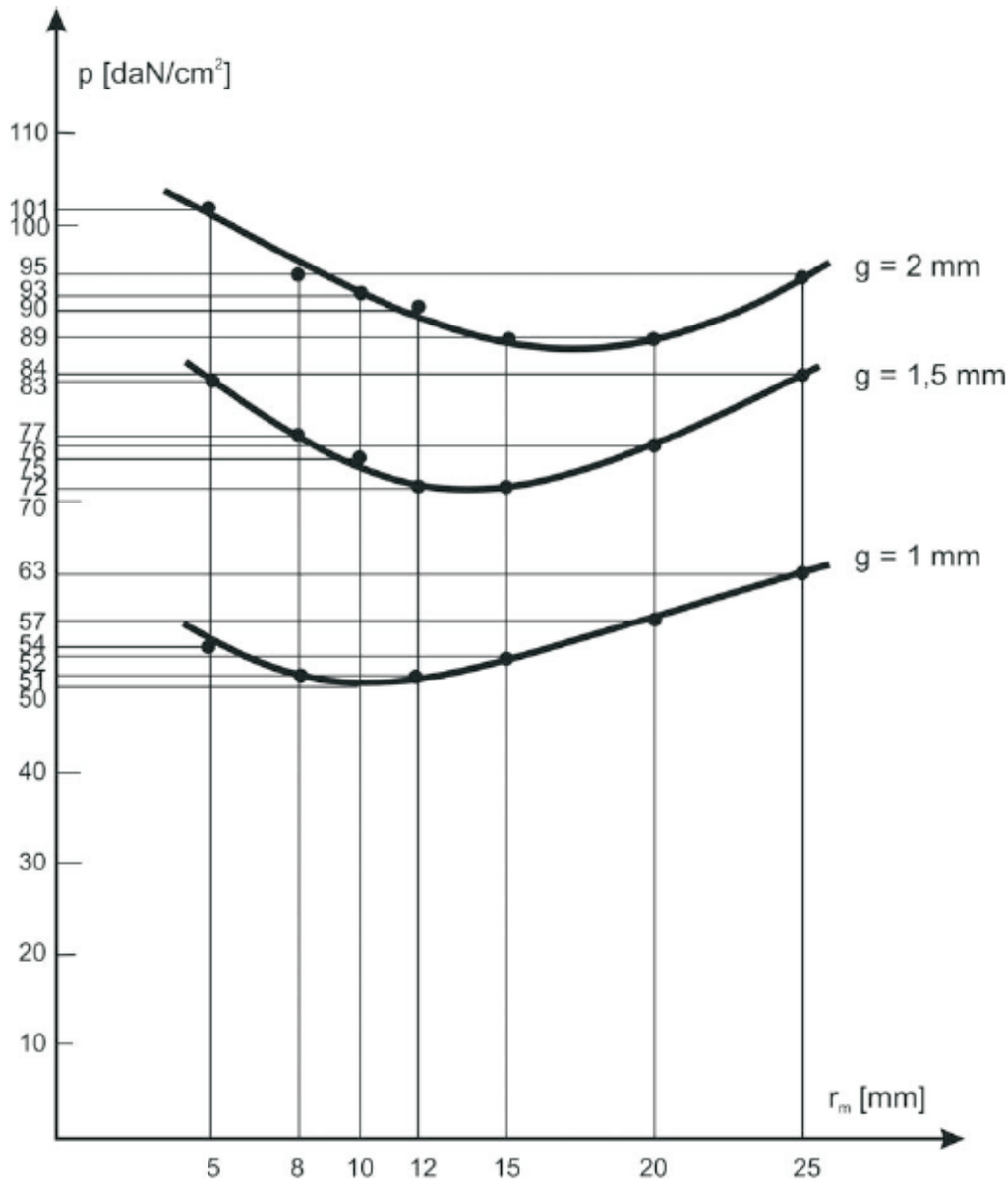

Fig. 8 Variation of the cupping pressure according to the radius of active mould

Active mould radius, may take values in the range (5 ÷ 8) g, when is necessary without cupping process to be influenced obviously. Under 5g value is not recommended as rm take values, whereas the flow of material over the active edge mould is difficult and may show cracks or even break the material.

4. Conclusion

1. The new technology is still experimental and the final working parameters will be communicated after the period of experimental research.

2. It is a question regarding the influence of the liquid temperature to the deforming process but this also will be included in a future research.

3. One of the most important parameter of the process is the speed and the force developed by the sealing elements, the hydraulic proportional axes. The first experiments shows that to the level at 5 Hz which is the maximum speed of reaction of the high pressure hydraulic valve from the command circuit, we can synchronize the speed of the sealing elements at a constant force generated by the pressure multiplier from the

system. This limit at this point is 3 cm / min for the speed of the sealing elements which is satisfactory for our laboratory experimental equipment. Larger moulds required more deforming speed and this problem will be a subject for future researches.

4. A limitation appears in the hydroforming process regarding the radius of the 90 degrease corner of the "T" shape. This limitation is at 5 times of the material thickness. Smaller radius means higher pressure and at 150 Mpa the minimum radius is 3 times thickness material.

REFERENCES

1. **Ahmetoglu Mustafa**, - *The basic elements of tubular hydroforming,* TPJ THE TUBE & PIPE JOURNAL, March 5, 2001
2. **Ahmetoglu, M. and Altan, T.**, - *Tube hydroforming: state-of-the-art and future trends*, *J. Mater. Process. Technol.* **98** (2000), pp. 25-33.
3. **Ahmetoglu, M., Sutter, K., Li, X.J. and Altan, T.**, - *Tube hydroforming: current research, applications and need for training, J. Mater. Process. Technol.* **98** (2000), pp. 224-231.
4. **Aue-U-Lan, Y., Ngaile, G. and Altan, T.**, - *Optimizing tube hydroforming using process simulation and experimental verification*, *Journal of Materials Processing Technology* **146** (2004) (1), pp. 137-143.
5. ***Aue-u-lan, Y., Strano, M., and Altan, T.***, *-"Determination of Flow Stress and Formability of Tubes for Hydroforming," THF/ERC/NSM/00-R-11, The Ohio State University, Columbus, Ohio, 2000.*
6. **Aydemir, A. and de Vree, J.H.P.** *et al.*, - *An adaptive simulation approach designed for tube hydroforming processes, J. Mater. Process. Technol.* **159** (2005), pp. 303-310.
7. **Chen, J., Xia, Z. and Tang, S.**, - *Corner fill modeling of tube hydroforming*, *Proceedings of the ASME, Manufacturing in Engineering Division, vol. 11* (2000), pp. 635-640.
8. **Dohmann, F. and Harti, C.**, - *Hydroforminga method to manufacture light weight parts, J. Mater. Process. Technol.* **60** (1996), pp. 669-676.
9. **Dohmann, F. and Hartl, C.**, - *Hydroforming-applications of coherent FE-simulations to the development of products and process, J. Mater. Process. Technol.* **150** (2004), pp. 18-24.
10. **Dohmann, F. and Hartl, Ch.,** - *Tube hydroforming-research and practical application, J. Mater. Process. Technol.* **71** (1997), pp. 174-186.

SISTEM ELECTROHIDRAULIC AUTOMAT PENTRU REALIZAREA PRODUSELOR LUNGI DIN ALIAJE SPECIALE DURIFICABILE PRIN PRECIPITARE

AUTOMATIC ELECTROHYDRAULIC SYSTEM FOR MAKING BARS FROM SPECIAL ALLOYS

Ing. Gabriel RADULESCU* Drd.ing. Radu RADOI* Drd.ing. Iulian DUTU*

** INOE 2000 - IHP*

Abstract: *The paper presents an automatic electrohydraulic system used for making bars from special alloys, the system being provided with a PID regulator which allows the regulation of the parameters during the manufacturing process. The system may work in a continuous cycle, controlling the back and forth strokes, the displacement speeds in both ways, the time terms in intermediary positions. The scheme allows a setting of the working table in the desired position, a controlled speed and it maintains it in this position for a certain pre set time. The speed control will be reached by a prompt of an increasing-decreasing linear displacement with pre set slope.*

1. INTRODUCERE

Sistemul electrohidraulic automat pentru fabricarea produselor lungi din aliaje special, dotat cu sistem electronic de comandã º i reglare, permite controlul parametrilor de fabricaþie (vitezã, lungime, timp, forþã) astfel încât cresc performanþele procesului, crescând considerabil º i calitatea produselor rezultate.

Existã producãtori care dispun de tehnologii performante în ceea ce priveº te realizarea compoziþiilor chimice, dar au neajunsuri importante la sistemele mecanice de acþionare. Astfel produsele se realizau, la instalaþiile vechi, cu sisteme mecanice sau hidraulice cu elemente de comandã pe bazã de relee, care creau probleme deosebite în ceea ce priveº te uniformitatea parametrilor geometrici (gâtuiri, ovalitãþi, abateri de la forma profilului) precum º i ruperi ale produsului (bare de diferite profile) în timpul procesului, fiind foarte greu de realizat produse cu lungimea de 6 metri.

Realizãrile actuale în domeniul mijloacelor de producþie industrialã au la baza module electronice, realizate dupã ultimele tehnologii, ce încorporeazã microcontrolere dedicate º i care permit controlul unui numãr mare de parametri ai proceselor.

2. BLOCURI FUNCÞIONALE

Sistemele de automatizare impun o prelucrare primarã a semnalelor de comandã º i a semnalelor mãsurate, aceastã prelucrare constând în principal în interfaþarea electricã cu elementul de acþionare, respectiv cu elementul de mãsurã º i interfaþarea cu linia de comunicaþie spre sistemul de control ierarhic superior. Realizarea practicã a acestor echipamente presupune integrarea într-un grad cât mai mare a electronicii în echipamentele de reglare.

Blocurile ce intrã în componenþa sistemului electrohidraulic de reglare automatã cu aparaturã proporþionalã de comandã sunt redate în figura 1.

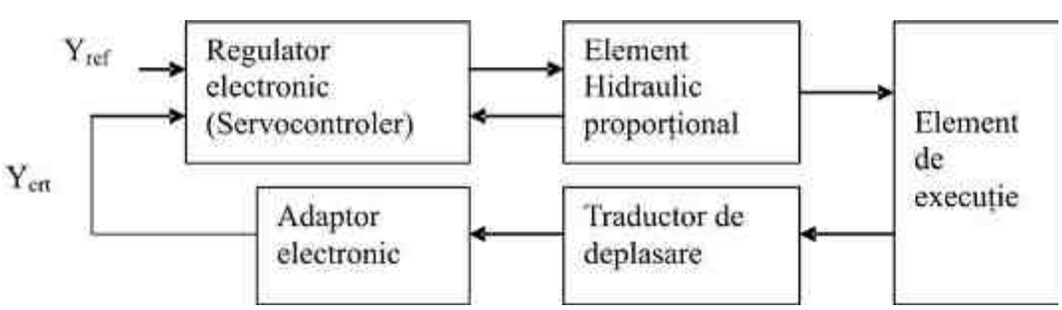

Figura 1

Elementul de comandă electrohidraulic este o unitate constructivă distinctă dispusă pe calea de transmitere a comenzilor de la sistemul de conducere către proces. Acest element este cuplat la intrare cu regulatorul electronic (servocontrolerul), iar la ieșire cu procesul prin intermediul dispozitivelor de acționare hidraulice. O particularitate a acestui element este caracteristica proporțională curent-debit, curent-presiune, sau curent-forță, obținută prin utilizarea unor convertoare liniare electromecanice. Elementul electrohidraulic utilizat în această instalație este un distribuitor hidraulic proporțional cu următoarele caracteristici:

- domeniul curentului de comandă: 200 800 mA
- rezistența ohmică a convertorului electromecanic: cca 20

Servocontrolerul electronic utilizat în acest sistem de automatizare are rolul de a face legatura între operator și cele două căi spre proces, cea informațională și cea de comandă.

Principiul de funcționare este următorul:

Un amplificator regulator de tip PID compară tot timpul tensiunea care reprezintă mărimea mecanică executată cu o tensiune de referință U_R care reprezinta mărimea mecanică prescrisă. Atâta timp cât cele două tensiuni vor fi diferite, amplificatorul de eroare va da, la ieșirea sa, o tensiune de comandă care transformată în curent cu ajutorul unui convertor tensiune-curent, acționează elementul de comandă hidraulic în sensul egalării celor două tensiuni, producându-se în final obținerea unei mărimi mecanice efectiv egală cu cea prescrisă. Intrucât la concepția și execuția acestui sistem sunt luate toate măsurile ca el sa fie stabil atât din punct de vedere static cât și dinamic, se obține astfel o acționare precisă a sistemului.

Servocontrolerul are rolul efectiv de a controla în bucla închisă deplasarea, control care este esențial pentru funcționarea corectă și precisă a deplasării unui motor hidraulic liniar și care constituie reglajul automat principal.

Traductorul de poziție este cuplat la intrare cu procesul iar la ieșire este conectat la dispozitivul de automatizare (regulatorul automat sau interfața cu calculatorul de proces). Informația de la traductor trebuie sa fie adusă cu ajutorul schemei de măsura electronice, la o formă cât mai avantajoasă pentru transmiterea la distanță, de regulă sub forma unui semnal unificat în tensiune (0…10V sau -10…+10V), respectiv curent (2...10mA sau 4...20mA). Această conversie este realizată de blocuri electronice adaptoare.

Elementul de execuție, în cazul descris aici este o masă mobilă, pe care este fixată menghina de prindere a produsului ce iese din cuptorul de elaborare, ce culisează pe ghidajele fixate pe un cadru metalic fixat pe podea. Aceasta este antrenată în mișcare de tija unui cilindru prins pe cadrul metalic de sub masă. Menghina este acționată de un al II-lea cilindru fixat pe masă. Bacul opus celui acționat de cilindru poate fi reglat astfel încât să se asigure centrarea barei în lungul axei de tragere.

3. DESCRIEREA CONSTRUCTIVĂ A SISTEMULUI

Sistemul mecanohidraulic de tragere se compune din cilindrul de strângere - 1 fixat la un capăt prin suportul 9 cu organele de asamblare - 35 și 36 iar la celălalt capăt pe suportul transversal stânga - 18, tija cilindrului fiind cuplată mecanic pe suportul bacului 6, ce poate fi echipat cu două tipuri de bacuri - 7 și 8 și care se ghidează în ghidajul fix - 2. Simetric pe suportul transversal dreapta - 20 este fixat mecanismul șurub - 15 antrenabil cu mânerul - 16 blocabil pe poziție - 21 și piulița - 13. Șurubul - 15 este cuplat cu suportul bac 3 care poate fi echipat cu două tipuri de bacuri 4 și 5 și ghidează în celălalt ghidaj fix 2. Suporții transversali 18 și 20 sunt fixați pe suportul de bază 12 și solidarizați prin coloanele 19 care poate deplasa în raport cu șasiul liniei de turnare ghidat de bucșele 30 pe coloanele 17. Cilindrul de tragere 11 solidar cu placa de șasiu 47 prin suporții 9 și 10 are tijă cuplată cu placa de bază 12. În vederea din B se văd sistemul de tije, suporți și came 46 care acționează contactori d elimită de cursă.

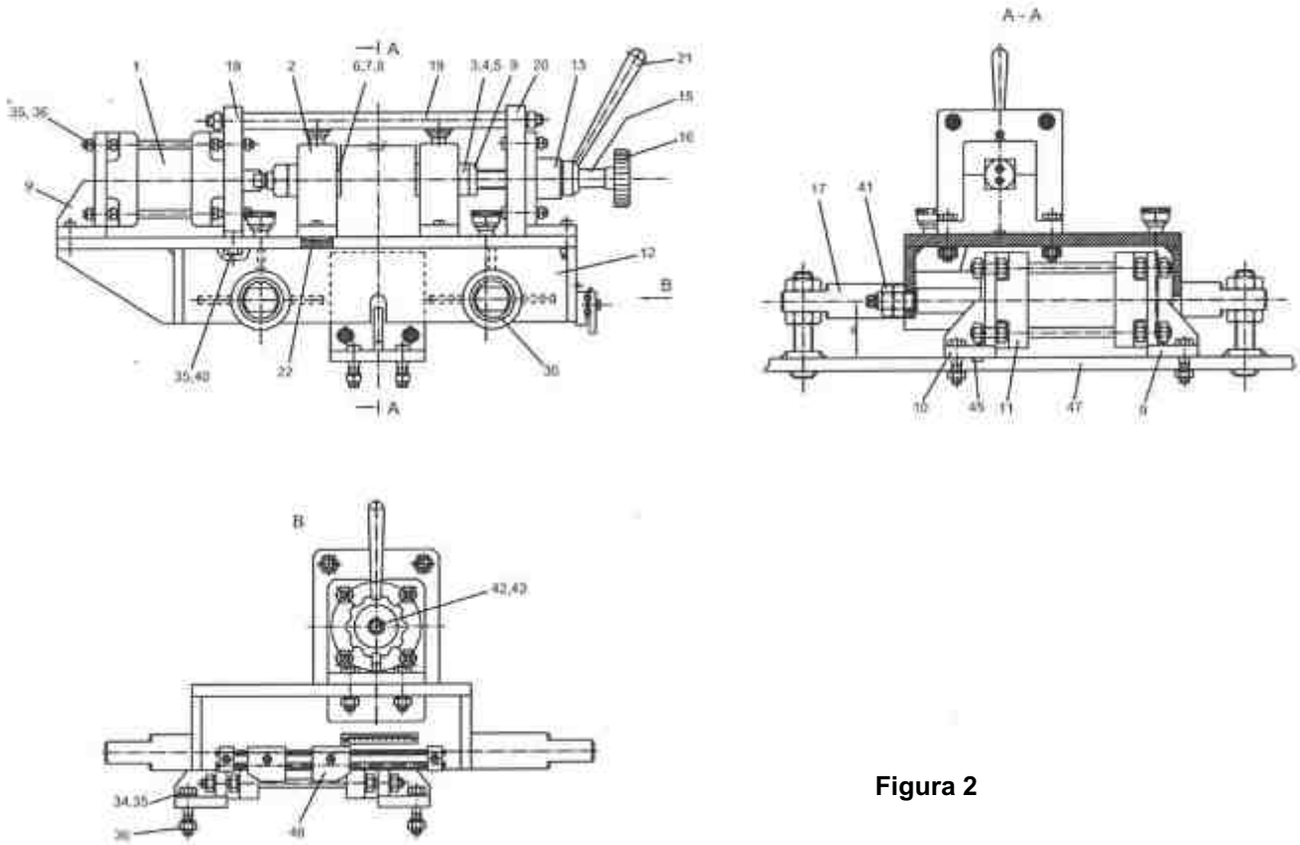

Figura 2

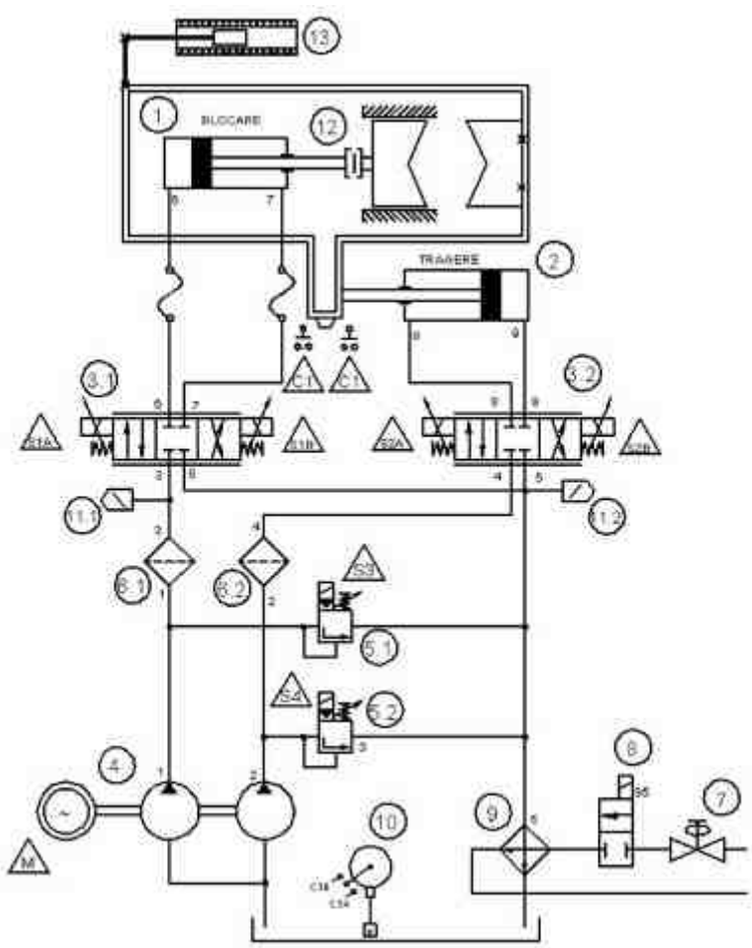

Figura 3

Figura 3 schematizează sistememul electrohidraulic de comandă în care o electropompă dublă 4 avînd în derivaţie cîte o supapă de conectare electrică 5 alimentează prin filtrul 6 distribuitoarele proporţionale 3 pe intrările cărora sunt montaţi traductorii de presiune 11. Cele două ramuri de presiune sunt independente hidraulic şi alimentează circuitul de alimentare al cilindrului de strângere 1 cuplat cu bacul mobil prin intermediul traductorului de forţă 12 şi circuitul de alimentare al sistemului de avans 2 cuplat cu suportul de bază 12 figura 2 şi prin intermediul acestuia cu traductorul de cursă 13. Menţinerea temperaturii fluidului de lucru se face prin schimbătorul de căldură 9 alimentat prin electroventilul 8 comandat de termometrul cu contacte 10.

4. FUNCŢIONAREA SISTEMULUI

Blocul electronic asigură funcţionarea maşinii în ciclu continuu, controlând cursa de avans, cursa de retragere, vitezele de deplasare în cele două sensuri, precum şi timpii de aşteptare în poziţiile prescrise. Schema permite aducerea mesei de lucru în poziţia prescrisă, cu o viteză de asemenea controlată şi o va menţine în această poziţie un timp prestabilit. Controlul asupra vitezei se va obţine prin aplicarea unei comenzi de deplasare liniar crescătoare/descrescătoare cu panta presetabilă. Comanda de deplasare va fi obţinută de la un programator secvenţial şi va fi ciclică. Între cele două comenzi se va prevede o pauză necesară acţionării unui sistem hidraulic de prindere a materialului . Controlul deplasării se face cu un amplificatorul regulator de tip PID.

Ciclograma de funcţionare a instalaţiei este de forma celei prezentate în figura 4.

Strângerea comandată de distribuitorul proporţional 3.1.

Tragerea se face cu viteză comandată de distribuitorul proporţional 3.2 iar mărimea cursei este controlată de traductorul de cursă 10 şi suplimentar, prin doi contactori acţionaţi de came montate pe suport bază 12 - fig. 3, se limitează cursa extremă.

Alimentarea cu presiune este întreruptă alternativ pe circuite atunci când nu este utilizată prin supapele de deconectare 6.

Răcirea uleiului din instalaţie se realizează automat cu ajutorul unui regulator de temperatură.

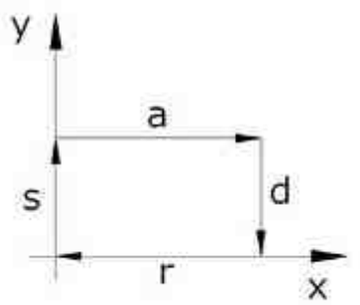

Figura 4

Cele două mişcări au direcţii perpendiculare, strângerea 0y şi tragerea pe 0x astfel:

s: strângere bară
a: avans menţinând strângerea
d: desfacerea
r: retragerea menţinând desfacerea

Reglaje iniţiale ale instalaţiei

- stabilirea poziţiei iniţiale a mesei (punctul de zero)
- stabilirea vitezei de revenire în poziţia iniţială
- acceleraţia de plecare a cilindrului mesei

La apăsarea butonului START ciclu se execută urmatoarele operaţii:

1. se acţionează cilindrul de strângere;
2. se aşteaptă un timp de cca o secundă (reglabil);
3. se comandă retragerea cilindrului mesei spre poziţia stabilită (in domeniul 0…20mm) şi cu viteza aleasă (în domeniul 0,1…20mm/s);
4. se opreşte cilindrul la atingerea poziţiei prescrise (S1) şi se aşteaptă un timp reglabil (in domeniul 0…10s);
5. se comandă înaintarea cilindrului mesei spre poziţia stabilită (în domeniul 0…20mmm) cu viteza stabilită (în domeniul 0,1…20mm/s);
6. se opreşte cilindrul la atingerea valorii prescrise (S2) şi se aşteaptă un timp reglabil (în domeniul 0…30s);
7. se dă comanda de eliberare pentru cilindrul de strângere;

8. se aºteaptã un timp de cca o secundã (reglabil);
9. se comandã miºcarea cilindrului mesei spre poziþia iniþialã (S0) cu viteza stabilitã de PV0
10. se reia ciclul.

Existã posibilitatea de a comanda manual secvenþele de mers inainte, respectiv inapoi a cilindrului mesei, prin acþionarea push-butoanelor corespunzatoare, dacã se trece selectorul MANUAL/AUTOMAT pe poziþia MANUAL.

În figura 5 se poate vedea o imagine a instalaþiei.

Figura 5

BIBLIOGRAFIE

[1] Roboþi industriali ºi manipulatoare N. Alexandrescu, D. Drimer, A. Oprean º.a., Editura Tehnicã Bucureºti 1985
[2] Acþionări hidraulic ºi pneumatice Mihai Avram, Editura Printech 2000
[3] Tehnica reglãrii automate Dumitrache I., Editura Didacticã ºi Pedagogicã, Bucureºti 1980
[4] Tehnica hidraulicii proporþionale Deacu L., Banabic D., Rãdulescu M.M., Raþiu C., Editura Dacia Cluj-Napoca 1989
[5] Sisteme hidraulice de acþionare ºi reglare automatã V. Marin, R. Moscovici, D. Teneslav, Editura Tehnicã 1981
[6] Sisteme hidraulice automate-construcþie, reglare, exploatare Marin V., Marin Al., , Editura Tehnicã Bucureºti ,1987

Lucrări de cercetare realizate în Institutul de Cercetări pentru Hidraulică şi Pneumatică Bucureşti I.H.P.
[1] Cercetãri privind realizarea axelor hidraulice;
[2] Introducerea principiilor mecatronicii în realizarea ºi utilizarea echipamentelor ºi sistemelor hidraulice ºi pneumatice.

MOBILE MACHINE WITH INTERCHANGEABLE MULTIFUNCTION EQUIPMENTS FOR THE HANDLING OF MATERIALS FROM AGRICULTURE, FORESTRY, CIVIL AND INDUSTRIAL CONSTRUCTIONS

UTILAJ MOBIL CU ECHIPAMENTE MULTIFUNCȚIONALE INTERSCHIMBABILE PENTRU MANIPULAREA PRODUSELOR DIN AGRICULTURĂ SI SILVICULTURĂ, A MATERIALELOR PENTRU CONSTRUCȚIA ŞI INTREȚINEREA DE DRUMURI

CONSTANTIN CHIRIÞÃ[1], DANIEL CALFA[2],
CORNELIU CONSTANTIN DUCA[2] and GHEORGHE PLEª U[1]
[1] *"Gheorghe Asachi" Technical University of Iaşi, Department of Machine Tools, e-mail:* disahp@disahp.net
[2] *Hydramold Company, Iasi, Research Department, e-mail:* hydramold@hydramold.com

Abstract. *This work presents a concept of mobile machine, UEMA type, developed within the research program INOVARE 2008, based on research contract no. 213 / 26.09.2008, in a partnership between 2 national companies and 2 national research institutes under the direct leadership AMCSIT of Bucharest.*
Key words: *interchangeble, mobile machine.*

1. Introduction

Regardless of specialization in agriculture, construction or demolition companies worldwide have these goals: speed in execution, adaptability regardless of activity, simple handling of materials, intensive and sustained work, minimizing the times operation.

To these are added the following restrictions: reducing the work area, reducing the dimensions of equipment and machinery, reducing the noises, vibrations and harms, increase the price steel and other materials, more low fuel consumption, lower costs for maintenance, repair and storage of machinery and equipment, efficiency works as the objectives become the global strategies.

The solution came from the manufacture of multipurpose machines on the structure of specific machine, compatible and operational with appropriate work equipments, easily coupled to a carrier mechanism. Many issues of cost, small size, strength and precision, have been solved by using hydraulic transmission of movements.

2. The Necessity of Making a Local Mobile Machine

In Romania, it does not exist a local manufacturer for a mobile machine like this and that these machines are imported. Thus, it is necessary to manufacture a mobile machine UEMA in order to perform quality intelligence works at a small price at operations of loading/unloading, transportation, lifting and transfer of specific materials from different industries.

The novelty UEMA product derived from:

a. meet the requirement of beneficiaries to have a custom machine, equipped with the equipments of the high productivity, contains proprietary solutions, using simultaneous commands, view the operations and functions;

b. is equipped with quick coupling work equipments;

c. is provided with control systems, monitoring and damage preventions;

d. is equipped with monitored systems functioning and operation functions of the mobile machine, optical and acoustic permanent surveillance;

e. eliminating uncontrolled intervention of the operator;

f. compact design which ensure easy portability, by modules, of multifunctional equipments;

g. levels pollution below the allowed limits.

Using the product provides the following advantages:

a. lower cost price by 22% compared to similar products from manufacturers surveyed;

b. minimum operating costs through efficient heat engine fitted which has reduced fuel consumption;

c. high reliability using the highest generation components;

d. ergonomic control station with heating system, air conditioned and pressurized cabin;

e. custom equipment of high productivity;

f. monitoring system operation and functions, warning and protection against damage;

g. monitoring during the lifetime of equipment, protection;

h. ensuring the operator training at the delivery equipment.

3. UEMA Mobile Machine Structures

3.1. *The Equipment Levels*

Wanting to provide clients a powerful machine, our specialists propose 4 levels of equipment for UEMA mobile machine:

i. first level – standard machine (blade digging - cranes rear leveling) with back equipment (fork mechanical for: plant debris, manure, round bales) (Fig.1,a);

ii. second level – standard machine (blade digging - cranes rear leveling) with back equipment (bucket for light materials) (Fig.1,b);

iii. third level – standard machine (blade digging - cranes rear leveling) with back equipment (cranes for wood) (Fig.1,c);

iv. fourth level – standard machine (blade digging - cranes rear leveling) with back equipment (stacker) (Fig.1,d).

Fig. 1 – UEMA level equipments:
a – first level; *b* – second level; *c* – third level;
d – fourth level.

UEMA mobile machine is done in a modular structure, whose description is made on sub-assemblies:

1. the standard machine: frame welding, heat engine, clutch, gearbox, engine deck rear, steered front, control station, cockpit, steering system, brake system, hydraulic system, electrical installation, systems monitoring of operations and functions, defenders protection;

2. the front equipment: blade digging - cranes rear leveling, made in welded structure, with quick coupling system, the tilt left/right system, the lifting mechanism with hydraulic cylinders and associated pipes;

3. back drive equipment: riding system, rotation systems of the arm, arm, fixed or telescopic handle, quick coupling mechanism of hydraulic equipment and the hydraulic installation, all sub-assemblies mentioned made in welded structure;

4. work equipment back are multifunctional, interchangeable, made in welded structure, with quick coupling systems on the carrier mechanism.

3.2. *Technical Characteristics*

The technical characteristics of UEMA mobile machine relating dimensional, functional and operating parameters on the standard machine and the work equipments, with delivery in two versions: standard or optional (Table 1)..

Table 1
Technical characteristics of standard machine

Components	Parameter	UM	Value
Chassis	–	–	rigid
Diesel Engine	rated output	kW/CP	60/81
	speed	rot/min	2.200
	maximum torque speed to maximum torque	Nm rot/min	290 1.400
	specific consumption of diesel	g/kW*h	220
	weight	kg	450
Transmission	clutch		dry monodisc
	gearbox distribution box		AK5
	crosshead ø180, ø150	daNm	560
Steered towards Rear engine deck	tire tire		310-406 (12-16)R 530-610 (21,3-24)R
Steering system	front		power steering Danfoss and two hydraulic cylinders steering and engine monitoring
Control station	back		joysticks and equipments control
	left side right side		brake monitoring systems gear shifter and transmission monitoring
Cockpit	one operator service brake		ergonomic swivel seat, heated, AC pneumatic
Brake system	safety brake		disk
	parking brake		spring incorporated in the double pneumatic cylinder of safety brake
Pneumatic plant			two circuits
Hydraulic plant Electric plant		 V	fixed displacement pumps 12
Electronics plant and monitoring of functions and defects			monitoring system of functions and operations, set of sensors, LEDs and digital display devices to monitoring parameters
Overall dimensions	in motion, LxWxH	m	6x2,5x3,85
	in working, LxWxH	m	9,6x4,6x6,75
Turning radius Wheel base		m m	7 0,4
Maximum ramp		%	18÷20
Capacity	oil reservoir	l	150
	diesel reservoir	l	100
Weight	standard machine	kg	7.480

Table 2
Technical characteristics of equipments

Components	Parameter	UM	Value
Clamp	capacity	m^3	0,67
	opening grip	m	1,85
	capture depth	m	2,5
	lift height	m	3,85
	estimated weight without charge	kg	250
Cup for light materials	capacity	m^3	1
	opening grip	m	1,85
	capture depth	m	2,5
	lift height	m	3,85
	estimated weight without charge	kg	300
Climbing root	capacity	m^3	1
	opening grip	m	1,85
	capture depth	m	2,5
	lift height	m	3,85
	estimated weight without charge	kg	250
	capacity grip	kg	1.000
Hook	capture depth	m	2,5
	lift height	m	3,85
	estimated weight without charge	kg	120
Levelling and cutting blade	width	m	2,45
	cutting depth	m	0,25
	lift height	m	0,70
	estimated weight without load	kg	380
	the angle of inclination of the blade	°	17
Excavation cup	capacity	m^3	0,44
	minimum radius of excavation	m	5,5
	depth of excavation	m	2,5
	ditch width	m	0,7
	estimated weight without charge	kg	190

Outline dimensions of a mobile machine type UEMA are given in Fig. 2.

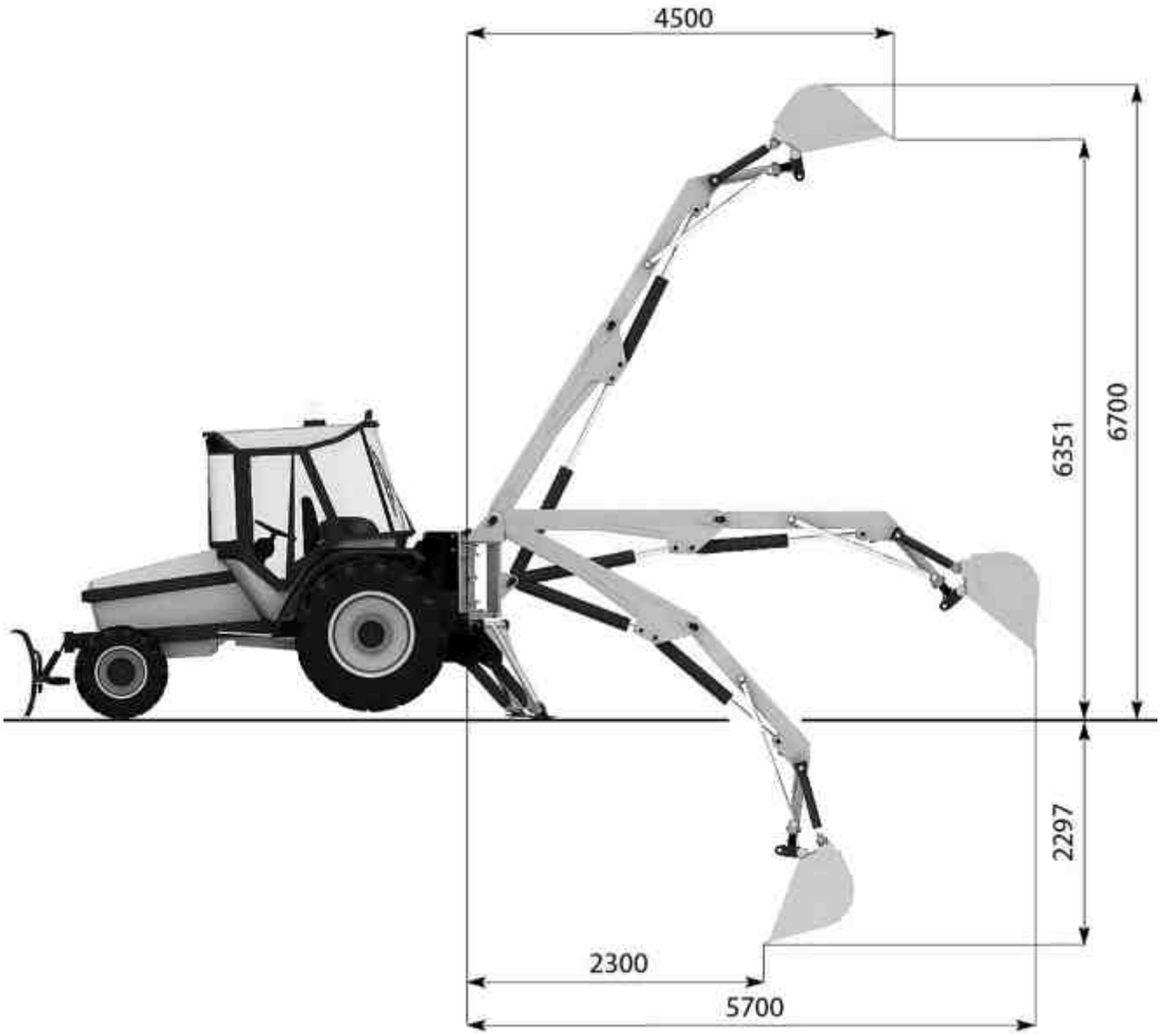

Fig. 2 – Outline dimensions for UEMA mobile machine
(second level equipped).

4. Operation

Operation of equipment is done from cockpit. Control station has two desks:

I. one – for travels direction of mobile machine, where are the commands for front equipments;

II. other – is disposed toward the back of the cockpit.

Operator's seat is rotated and fastened to one of two control panels in the cabin.

Joystick-type controls are electrically active and all equipment working car (with two or three double commands). Operator acts as levers for action: turning and lifting/lowering arm, lifting/lowering handle / work equipment and the function of closing/opening scoops, or other control equipment installed.

Separate is level for wedging and interchange ability of work equipments.

Coupling and decoupling of equipment is done by operator from cockpit, without the help of another person.

Hand commands are on the gear lever, clutch and brake service, safety and parking.

5. Conclusions

1. Multifunctional UEMA mobile is a machine loaded with propagation growing field of agriculture, forestry, livestock farm or construction and will cause the evolution of manufacturing equipment to forces, moments of inertia, speed and higher pressures, the closer monitoring the process parameters that decide the quality.

2. The latest innovations multifunctional machine focused on the need for the equipments of high productivity work with proprietary solutions, quick coupling systems for work equipment, uses simultaneous commands, monitors the operation and functions of mobile equipment, optical and acoustic surveillance, permanent.

3. Handling technology, agricultural products and construction materials, require individual work equipment hydraulic power that can be executed successfully by the manufacturer specializing in hydraulic power, Hydramold Iasi.

R E F E R E N C E S

1.* * * *Studiu ştiinţific şi tehnic al solutiilor pentru utilaj mobil UEMA,* Etapa I, Program 5 Inovare, Contract de Finantare 213/2008, H y d r a m o l d laºi, Noiembrie 2008.
2. www.caterpilar.usa.
3. www.danfoss.den.
4. www.jcb.uk.
5. www.komatsu.japan.
6. www.perkins.uk.
7. www.po-mmz.minsk.by.
8. www.pogruzka.com.
9. www.terex.usa.
10. www.theloaders.com

TEHNOLOGIE SI ANSAMBLURI DE ETANSARE COMBINATE DIN ELASTOMERI SI PANZA PENTRU PRESIUNI INALTE SI MEDII AGRESIVE

TECHNOLOGY AND ASSEMBLIES OF COMBINED SEALING WITH ELASTOMERS AND FABRIC FOR HIGH PRESSURES AND AGGRESIVE ENVIRONMENTS

Ph.D. Adrian Mirea* , Eng. ANGHEL Sava**

*ROMFLUID, **INOE 2000 IHP

Abstract

Performing sealing at high pressures in aggresive environments remains a constant concern of scientific research in the field. In the ferruous metallurgy the conditions of operation of the hydrraulic installations are extremely hard, this meaning high pressures and temperatures, difficult work conditions, dust and hot iron dross. The technological processes from this field are in non interrupted flux and do not allow any stop of the equipment during work. Due to these factors sealings must ensure a great safety during operation.

Problema obtinerii etansarilor pentru presiuni inalte si medii agresive constituie o preucupare constanta a cercetarii . In industra siderurgica sunt conditii dure de functionare pentru instalatiile hidraulice, respectiv presiuni inalte, temperaturi ridicate si conditii dure de lucru, praf, zgura fierbinte. Procesele tehnologice din siderurgie sunt continuu si nu permit interventii la utilaje in timpul functionarii, de aceea etansarile trebuie sa asigure un inalt nivel privind siguranta in exploatre. Prin colaborarea noastra in timp cu specialistii de la Sidex Galati s-a castigat o mare experenta in proiectarea executia si exploatarea a doua familii de etansari ; familia de etansari de tip T formate din elastomer si plastic si familia de etansari din panzate.

Familia tip T executata in anii 90 a corespuns functional dar datorita temperaturilor ridicate si in special a zgurei fierbinti care se lipea de tija cilindrilor ducea la deteriorarea inelelor din plastic a etansarilor.

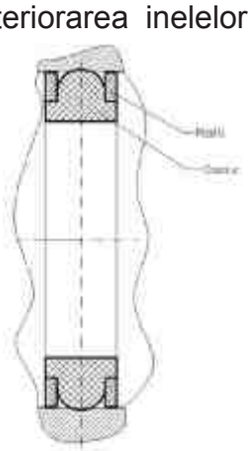

Fig. 1 Etansarea tip T formata din un inel de cauciuc si doua inele din duramid (plastic)

Familia de etansari din panzate care se executa in prezent pentru siderurgie corespunde functional si la conditiile extreme dar sunt prea rigide si desii sunt prevazute cu sisteme de strangere a etansarii pot apare pierderi de lichid de lucru in repaus sau sub presiune .

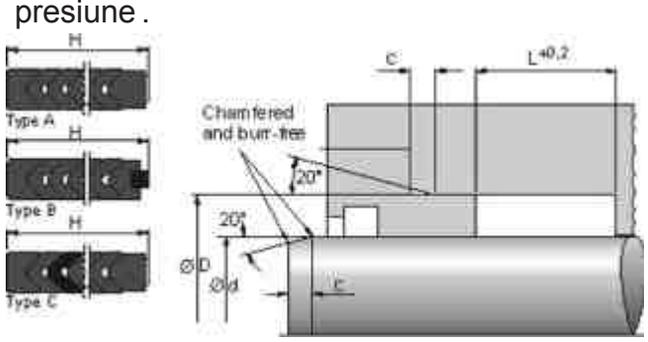

Fig. 2 Etansari panzate conform firmei SIMRIT

Fig. 3 sectiune prin pachetul de etansari produs de SC ROMFLUID SA

Apare nevoia de dezvoltare a unei noi familii care sa indeplineasca performatele celor doua familii de etansari si anume sa fie elastice pentru a prelua jocurile mari din ghidaje si sa poata rezista la fel de bine ca etansarile panzate la conditiile dure de functionare .

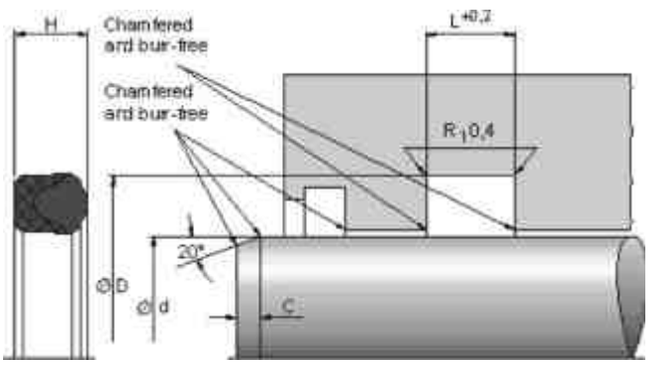

Fig. 3 Etansari compuse conform firmei SIMRIT

Fig. 4 Ansamblu de etansare produsa de SC ROMFLUID SA

Tehnologia de vulcanizare a etansarilor compuseare urmatoarele faze de lucru :

- Pregatirea amestecurilor de vulcanizare

Amestecurile de vulcanizare sunt elaborate de firme de specialitate . Amestecurile de vulcanizare difera in functie de conditiile de utilizare a etansarii (mediu de lucru temperaturi , presiuni). Fiecare firma are retete de amestecuri pe care le livreaza sub forma de amestec complet , gata de utilizare care trebuie pastrat la temperaturi joase sau amestec incomplect, si care inainte de utilizare se complecteaza prin adaugarea componentelor de vulcanizare pe un valt.

- Pregatirea prefabricatului panzat

Panza utilizata la etansari trebuie sa adere la cauciucul etansarii.

Panza se impregneaza prin frictiune sau gumare cu cauciuc.

Natura elastomerului cu care se impregneaza trebuie sa fie aceeasi cu a elastomerului care se foloseste la vulcanizarea finala.

Pentru obtinerea semifabricatului din panza impregnata , se croieste o suprafata de panza care trebuie sa corespunda atat ca forma suprafetei cat si ca greutate cu sablonul specific etansarii . Panza este roluita pe un sablon cilindric cu directia firelor de urzeala si bateala la 45 de grade si apoi este introdus in matrita de vulcanizare , in cazul nostru se face o prevulcanizare care are rolul ca prefabricatul sa pastreze forma zonei panzate a garniturii . In timpul presarii se fac mai multe aerisiri prin deschiderea matritei si reluarea presarii . Cantitatea de panza impregnata este calculata in asa fel incat sa umple golul matritei si sa elimine , in exterior , o cantitate de cca 1% din cauciucul folosit la impregnare.

Nu se accepta eliminarea panzei din matrita Astfel se obtine un semifabricat complect cu o bavura usor de indepartat iar panza nu face contact cu uleiul.

Deoarece panza are alt coeficent de contractie fata de amestecul de cauciuc pentru realizarea garniturii finale se utilizeaza o matrita complexa la care sau luat in consideratie coeficentii de contractie si in urma experimentarilor se vor stabilii variatia coeficentilor in profilul garniturii .

- vulcanizarea garniturii

dupa incalzirea matritei se pozitioneaza semifabricatul din panza prevulcanizata in matrita , apoi se complecteaza cu amestec de vulcanizare calculat sa depaseasca cu cca 3% volumul matritei . Se introduce matrita in presa si se face presarea cu intreruperi pentru aerisire , una sau doua . In timpul vulcanizarii se dezvolta in structura amestecurilor , gaze care trebuiesc eliminate. . Nu se admite ca semifabricatul din panza sa fie antrenat in zona de inchidere a matritei , unde sa patrunda in bavura care se formeaza .

Dupa vulcanizare se extrage garnitura se raceste si se debavureaza. In timpul debavurarii nu se admite sectionarea zonei panzate pentru a nu permite uleiului sa patrunda intre straturile de panza .

Proiectul privind realizarea de ansambluri de etansare si a tehnologiei producerii acestora trebuie sa rezolve probleme de cercetare despre care avem cunostinta ca exista sau care vor apare in timp , legate de profilul etansari , materialele folosite , tehnologia vulcanizarii , calitatea produselor obtinute etc .

In continuare enumeram cateva probleme rezolvate in cadrul proiectului :

- Alegerea unei panze cu mare aderenta la elastomer , care sa fie impregnata prin frictie cu elastomer compatibil cu elastomerii folositi la obtinerea etansarilor de inalta performanta din actionarile hidraulice . Impregnarea prin frictie presupune existenta a doua calandre care se rotesc unul fata de altul cu viteze diferite ,panza fiind intre calandre, iar elastomerul este introdus prin frictie intre firele panzei , obtinandu- se o aderenta superioara procedeului de gumare. La gumare elastomerul adera la panza si se efectuiaza pe o parte sau pe ambele parti a panzei .
- Obtinerea unui profil de etansare compusa care sa permita realizarea tehnologica a etansarii , pozitionarea zonei panzate in zona de extrudare a locasuluii de etansare , evitarea migratiei panzei din zona de extrudare a etansarii.
- Vulcanizarea elementelor de etansare compuse in matrite in conditii de precizie dimensionala ceruta , tinand cont de coeficentii de contractie diferite a celor doua materiale panza si elastomerul.

BIBLIOGRAFIE:

1. Burenin V.V.// Proizvodstvo i ispolizovanie elastomerov: Inform. sb. M.: |NIITEneftehim, 1993. No 9. pag. 25-31.
2. Burenin V.V., Dronov V.P. - Manjetnîe uplotnenia podvijnîh soedinenii. Obzornaia informaþia M.:|INTIHIMNEFTEMA}, 1981. - 44 pag.
3. Cauciuc º i materiale plastice-Culegere de informaþii faptice.
4. ”Materiale plastice”, Nr.1-6/1996
5. ”Kauciuc i rezina”, Nr. 1-6/1995, Nr.1-5/1996
6. ”Plaste und Kautchuk”(R.D.G.), Nr.1-12/1990
7. Drãghici, I., º .a.-Suspensii si amortizoare. Editura Tehnicã, 1970
8. A.OPREAN º .a -Acþionãri si automatizãri hidraulice E.T. 1989
9. T.Volintiru, Gh.Ivan -Bazele tehnologice ale prelucrãrii elastomerilor E.T. 1974
10. Colecþia de reviste „ Hydraulics Pneumatics”
11. Colecția de reviste „ Machine Design”, periodicals a penton Publication USPS.
12. Deteriorarea etanºãrilor în sistemele hidraulice - cauze º i forme de apariþie
Dipl. -Ing. Helmut Weiss – *Busak + Shamban GmbH Co, Stuttgart*
13 . *Asist.univ.ing. Andi-Cristian Adrianescu* Strategii in cresterea fiabilitatii sistemelor hidraulicede actionare ce compun autovehiculele militare
14. Cataloage , Cd -uri , Programe de prezentare de la firmele SIMRIT , PARKER , HALLITE.

SIMULTĂNEOUS TIGHTENING WITH HYDRĂULIC BOLT TENSIONERS
STRÂNGEREĂ SIMULTĂNĂ Ă PREZOĂNELOR CU DISPOZITIVE HIDRĂULICE DE TENSIONĂRE

ADRIAN CONSTANTIN HANGANU* and CONSTANTIN CHIRI?Ã*
**Technical University "Gheorghe Asachi", Faculty of Machine Manufacturing and Industrial Management Machine Tools and CuttingTools Department Systems Engineering of Hydraulic and Pneumatic Department Iasi, Romania - e-mail:disahp@disahp.net*

Abstract. Hydraulic bolt tensioning is the most convenient method for obtaining simultaneous tightening. Results on actual application may vary depending on the dimensions and tolerances of the components, the quality of the tensioning tooling, and the implementation procedure. The article presents three cases: simultaneous tightening of 100 %, 50 % and 25 % of the bolts.

Key words: tensioning, linear elasticity, initial stresses, hydraulic

1. Introduction

Simultaneous tightening consists in tensioning several bolts, or even all of the bolts, of an assembly at the same time [1].

Hydraulic bolt tensioning is the most convenient method for obtaining simultaneous tightening. Results on actual application may vary depending on the dimensions and tolerances of the components, the quality of the tensioning tooling, and the implementation procedure [2] [3] [4]. A particular application can, if necessary, be examined in greater detail [1].

Hydraulic bolt tensioners can generally be used on assemblies which were not initially designed to be tightened with tensioners, provided that it is possible to use bolts with a sufficient protrusion on top of the nut. Nonetheless, it is strongly recommended to make allowance for the use of bolt tensioners from the beginning of the assembly design process: under such circumstances, the full benefits of the method can be achieved [1].

Bolted assemblies specifically designed to be tightened with bolt tensioners are particularly suited to the stringent requirements of applications requiring a high level of quality and safety, and they are optimised for dimensions and weight [1] [3] [4].

2. Simultaneous tightening of the bolts

2.1. *Simultaneous tightening of 100% of the bolts*

This is the most accurate and quickest method: all the bolts are tightened at the same time (Fig. 1). However, it requires as many tensioners as there are bolts. Therefore in our example, 16 tensioners would be required, including the necessary hoses and hydraulic connections.

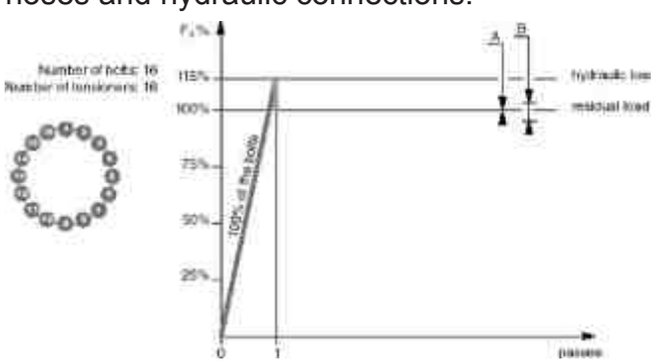

Fig. 1 – Simultaneous tightening of 100% of the bolts

Where: *A* is dispersion in the average value of the residual tension obtained after tightening, in relation to the desired residual tension: < ± 1%; *B* – total dispersion in all residual tension values after tightening, in relation to the average value: ± 3%.

The tightening operation is quite simple: each bolt is capped by a tensioner. All the tensioner oil-feed lines are connected to a common source of high-pressure oil. All the bolts are simultaneously stretched (preferably in two steps) to the required load.

In our example: Fo residual load = 210 kN for a hydraulic load Fh = 241.5 kN, using HTB27 Hydramold tensioners pressurised to 10 MPa.

This method provides excellent tightening homogeneity over all the bolts. We know from experience that the previously described uncertainties are significantly reduced:

- the uncertainty on the Fh/Fo ratio is reduced to +/-1%;
- the uncertainty on the hydraulic load depends on the tensioners only, and is therefore reduced to +/-1%;
- the uncertainty in the nut clamping moment is +/-2%;

The resulting dispersion in the tightening loads of the different bolts will be as low as 3%.

2.2. *Simultaneous tightening of 50% of the bolts*

In this case, every other bolt is tightened in one step, (Fig. 2), so that the number of tensioners required is halved. In our example, only eight tensioners are required with the necessary hoses and hydraulic connections.

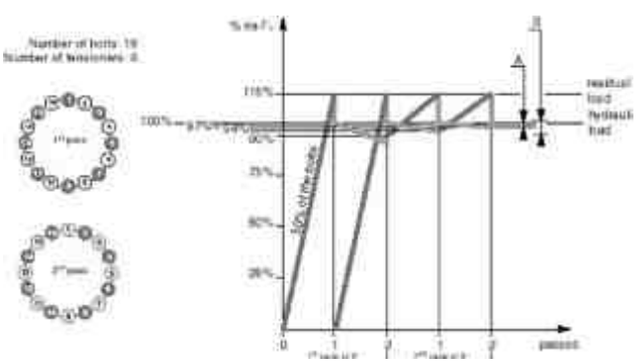

Fig. 2 – Simultaneous tightening of 50% of the bolts

Where: *A* is Dispersion in the average value of the residual tension obtained after tightening, in relation to the desired residual tension: +1%/-3%; *B* – dispersion in all residual tension values after tightening, in relation to the average value: +5%/-7%.

The tightening process requires two rounds of tightening on the first half of the bolts (which we call “even”) and at least one round on the second half (which we call “odd”) which means three and possibly four tightening rounds.

Assuming that during the first round we apply a hydraulic load of 241,5 kN to the even bolts, and settle to a residual load of 210 kN.

A first round on the second half of the bolts - the odd bolts - obtains the same residual load of 210 kN. However, tightening the odd bolts releases some of the load taken by the even ones, and reduces the load by 10%, to an average tightening value of 188.75 kN.

A second tightening round is thus required to bring the load back to 210 kN. However, this second step will once again cause the second half to loosen by approximately 6%, reducing the tightening load to 197.5 kN.

If this level is acceptable, the tightening operations can stop at this point. However, sometimes the second half requires a second round to bring residual load back up to 210 kN. This round will affect the first lot by approximately 3%, for an average residual tightening value of 3%, which is often perfectly acceptable.

The load homogeneity is not as good as in the case of 100% simultaneous tightening, but the variation remains within an acceptable range of +5%/-7%.

In many applications this deviation can be considered as acceptable.

Naturally, the intervention time is longer than in the preceding case.

2.3. *Simultaneous tightening of 25% of the bolts*

In this case, only one bolt in four is tightened at each step (Fig. 3). The number of tensioners required is one-fourth the total number of bolts, namely four in our example. Each set of four bolts will need at least four tightening steps, which means that sixteen steps are required to guarantee acceptable load homogeneity.

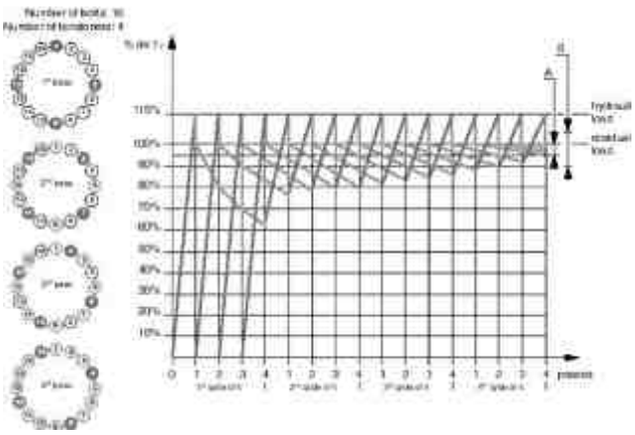

Fig. 3 – Simultaneous tightening of 25% of the bolts

Where: *A* is Dispersion in the average value of the residual tension obtained after tightening, in relation to the desired residual tension: +1%/-5%; *B* – dispersion in all residual tension values after tightening, in relation to the average value: +6%/-10%.

The first set of bolts (say numbers 1, 5, 9 and 13) is first tightened with a residual load of 210 kN, but then will lose 20%, 30% and finally 35% of the load (136.25 kN) while the neighbouring sets are successively tightened.

Four rounds are required before the first set remains within 5% of the nominal load after adjustment of its neighbours. The load is then 199.5 kN. If this variation is compatible with the application, we may stop the operations at this stage. However, the load homogeneity is obviously not as good as in the case of 100% simultaneous tightening. The level of variation will lie within the range +6%/-10%.

One more round on the first set of bolts will bring the variation within the range 5%/-8%.

Clearly, the use of control means such as smart washers can reduce the uncertainties described above.

Since there are more rounds, the intervention time increases proportionally.

3. Practical Ăpplications

Simultaneous tightening with individual tensioners connected to a single oil feed (Fig. 4, 5 and 6) and simultaneous tightening with monobloc ring (Fig. 7):

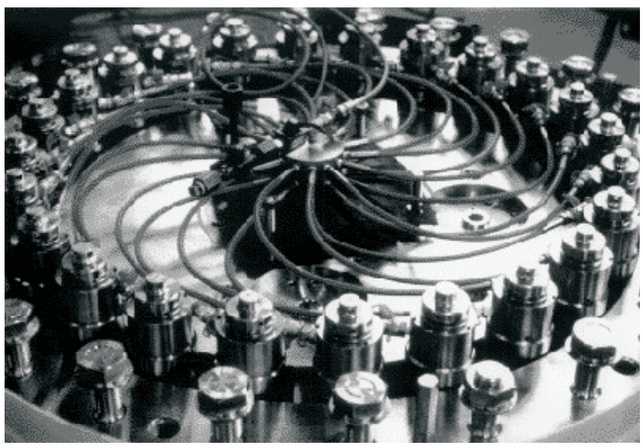

Fig. 4 – Simultaneous tightening of 100% of the bolts with individualhydraulic tensioners connected to a single oil feed

Fig. 5 – Simultaneous tightening of 100% of the bolts with individual hydraulic tensioners connected to a single oil feed

Fig. 6 – Simultaneous tightening of 50% of the bolts with individual hydraulic tensioners connected to a single oil feed

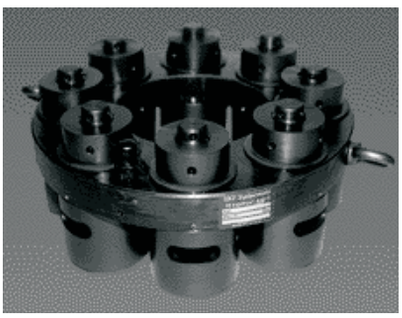

Fig. 7 – Simultaneous tightening of 100% of the bolts with hydraulic monobloc ring

4. Conclusion

1. We have already seen that this tightening process presents important, even decisive, advantages:
- great homogeneity in tightening all the bolts of the assembly;
- straightforward implementation;
- short process times.
2. Tightening with a hydraulic bolt tensioner preserves the condition of the components, no matter how many successive tightening and untightening operations occur (Fig. 8).

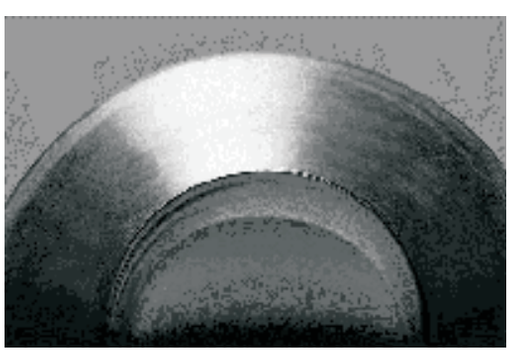

Fig. 8 – Tightening with a hydraulic bolt tensioner preserves the condition of the components, no matter how many successive tightening and untightening operations occur

3. Hydraulic bolt-tensioning offers the following advantages:
- no "parasite" torsion stress in the bolts;
- high load precision simply by controlling the hydraulic load;
- fast, safe and easy operation;
- the integrity and the reliability of threads and bearing surfaces are maintained;
- readily compatible with simultaneous tensioning of all the bolts in an assembly (or even several assemblies);
- tightening and measuring operations can be partially or fully automated;
- compatible with a wide variety of bolt materials (stainless steel, titanium, composite materials ...).
4. In addition, hydraulic bolt-tensioning also feature:
- use with a wide range of bolt sizes: 5 to 500 mm,
- easy adaptation due to modular design,
- greater homogeneity due to excellent efficiency (very important for simultaneous tightening),
- easy implementation of simple measuring methods, in particular the "smart washer", which directly measures the final tightening load.

Acknowledgements. The authors would like to thank Prof. Alexandru M a r i n for the support and constructive comments and also to the staff of the AMCSIT.

R E F E R E N C E S

1. H a n g a n u A et al., *Modular & flexible threaded assembly hydraulic equipment for mounting in central hydropower*. PNCDI II - INOVARE research contract, number 150, stage 1, **2008**.
2. *** *Norme AFNOR NF E 25-030.* French Standard, **1984**.
3. *** *Les assemblages vissés - Conception et montage*. Guide CETIM, **2001**.
4. *** *Systèmes mécaniques: Théorie et dimensionnement*. Editions Dunod, Paris - France, **1992**.

TECHNOLOGY AND EQUIPMENT FOR COMPLEX SURFACES NANOFINISHING BY ABRASIVE FLOW MACHINING WITH REOPECTIC WORK MEDIUMS

TECHNOLOGIE SI ECHIPAMENT PENTRU NANOFINISAREA SUPRAFETELOR COMPLEXE PRIN CURGERE ABRAZIVA FOLOSIND MEDII DE LUCRU REOPECTICE

Eng. Valeriu AVRAMESCU[a], Eng. Roxana GREJDANESCU[b], Eng. Norvegia Elena AVRAMESCU[c], Eng. Gheorghe ORASANU[d], Eng. Catalin Horia ORASANU[e], Eng. Loredana Theodora PAUN[f]

[a] *SC ICTCM Mechanical Engineering and Research Institute SA, Bucharest, Romania; vavramescu@ictcm.ro*
[b] *SC ICTCM Mechanical Engineering and Research Institute SA, Bucharest, Romania; groxana@ictcm.ro*
[c] *The Research and Development Institute for Heat Sectors INTEC, Bucharest, Romania, norlena.avramescu@yahoo.com;*
[d] *SC ICTCM Mechanical Engineering and Research Institute SA, Bucharest, Romania; ictcm@ictcm.ro*
[e] *SC ICTCM Mechanical Engineering and Research Institute SA, Bucharest, Romania; corasanu@ictcm.ro*
[f] *SC ICTCM Mechanical Engineering and Research Institute SA, Bucharest, Romania; lpaun@ictcm.ro*

Abstract: *This paper represents an introduction in the complex field of nanofinishing process with abrasive flow materials. This is a non-conventional technology, a highly efficient ecological procedure known as Abrasive Flow Machining (AFM).*
The equipment designed by ICTCM is an universal machine tool which consist in two opposed cylindersin order to extrude the abrasive medium through the passages and polish the surfaces and the edges. Extrusion pressure is ranging from 700 to 22000 kPa with flow rates up to 380 l/min. There is also a control system for process parameters such as temperature, viscosity, wear "flow speed of abrasive fluids, and others".
The abrasive fluid is a reopectic medium important in the achievement of the efficiency of nanofinishing technology. It consists in two main components: a viscous fluid which contains several components as lubricants, emulsifier and anticorrosion agents, and an abrasive material. The nature, the viscosity, the particle size and the concentration of the abrasive material are determinant for the final results of the technology. The mixture of all these chemicals and materials allow a very large range of composition of AF samples.

Key words: processing processe/ nanofinishing/ abrasive flowing/ reopectic work medium.

1 Introduction

Within the concerns aiming at developing the non-traditional technologies, a highly efficient ecological procedure emergent nowadays is *A*brasive *F*low *M*achining (*A.F.M.*), as it is known in the specialty literature.

Abrasive Flow Machining finishes surfaces and edges by extruding viscous abrasive media through or across the workpiece. Abrasion occurs only where the flow of the media is restricted and the other areas remain unaffected.

The studies regarding the abrasive flow machining showed that through this finishing procedure it is possible to accomplish operations such polishing, trimming and edges rounding for work pieces within a very wide dimensions range, performed in places difficult of access.

Using this procedure we may polish orifices of over 0.15 mm, diameter, cavities and complex surfaces in a wide domain of dimensions.

A variety of finishing results can be achieved by changing the process parameters and also by choosing a proper abrasive fluid (*AF*) which is of major importance.

Processing processes based on abrasive flow machining (AFM) were conceived in order to eliminate the deficiencies which appear at common mechanical processing, which were previously used.

2 Nanofinishing by abrasive flow machining and reopectic work mediums

The Abrasive Flow Machining (AFM) process use a reopectic work medium, which, according to its name, has as a main fundamental property the viscosity increasing at the compression forces' actuation.

By the AFM method can be finished surfaces and edges by extruding an abrasive medium, with variable viscosity, depending on the pressure that it is constrained, and by focusing this medium on the areas which must be finished. Abrasion occurs only there, where the flow of the medium is restricted; other areas remain unaffected.

In order to nanofinish with a reopectic work medium, which has a certain consistence, there is necessary that the medium be focussed by a nozzle, on the part's surface, which has to be finished. Function of the part's material properties, of the reopectic medium characteristics and of the quality that must be achieved by this process, it will be determined the suitable cycles number [1].

The work medium used in order to achieve the processing is a reopectic medium and consists of a polymer which carry a certain concentration of abrasive particles. The work medium is related with the process characteristics and it has as the main parameters the size of the particle, the particle material and the base medium.

The particle size. In the AFM process, the cutting tool is formed by the abrasive particles, and they have the biggest influence on the surfaces quality. If the particles sizes are smaller, then, the removed material quantity will be smaller but the quality of the finished surfaces will be increased. The particle sizes are between 0.005 mm and 1.5 mm. In the same medium they can be used two or three different sizes for the particles.

The particle material. The material of the abrasive particles commonly is silicon carbide but also it can be used boron carbide or aluminium oxide and diamond. The abrasive material choosing depends mainly on two factors. Firstly, it depends on the material which will be finished taking into account its density and its physical properties. Secondly, the requirements regarding the final surface's roughness must be considered.

The base medium. The medium temperature can be modified or constantly kept during all processing process. The temperature control during the process is very difficult because the medium is extruded under pressure in the part cavity [2]. The main reason for which the temperature must be considered is that its variation involves the medium viscosity variation. If the temperature increases, the viscosity decreases, and sometimes this might put in danger the abrasive particles suspension in the work medium.

3 Equipment for finishing by abrasive flow machining

The equipment for nanofinoshing, by abrasive flow, which is designed by ICTCM is an universal tool machine, which is made for finishing the parts which are resulted by cutting and electro-erosion [1].

The blank is fixed in a work device, which is specific to a part type or to parts aggregate. The surfaces processing is made by AFM process with two opposite cylinders and with the fixed part.

The equipment [1] is presented in Figure 1 (schematic representation) and Figure 2 (picture of the achieved equipment) and it is made by the following units:

The frame is a welded construction with a ribbed structure. The electrical and pneumatic installations are put here.

The inferior work cylinder is put on the frame. It is made by two cylinders with a diameter of 200 mm and the stroke of 125 mm, which are fixed on a support with columns and its bars are communed with an intermediary part.

The lower cylinder is pneumatic and the higher cylinder is actuated by the lower cylinder. In the higher cylinder there is the reopectic medium.
The work blade assures the displacement space of the device and the real work space.
It is made by a tub and it has at the base the inferior table of the machine and the lower cylinder is fixed on it.
The work superior cylinder has a diameter of 200 mm and the stroke is of 125 mm, and inside of it there is the reopectic medium. It is put under the superior work table and it is actuated by a pneumatic cylinder, by an intermediary part.
The vertical beam assures the equipment frame and it is a welded construction with a ribbed structure.

The work head is rested on the superior face of the vertical beam. Inside it, there are the two actuating cylinders of the superior work table and the diameter of these cylinders is of 125 mm and the stroke is of 125 mm. The superior work table is guided at descending and ascending, by two columns which are common with it, which coulisse by bushings with circular balls, and in this way it is assured the closing and opening of the work device after the die principle. On the two columns there are put some adjustable cams which actuate the micro switches in order to show the open and the close positions of the work device.
Also, inside of the work head is put the pneumatic cylinder which has the diameter of 200 mm and the stroke of 125 mm for actuating the superior work cylinder.

The work device is put inside of the work blade, on the inferior table of the machine. Its role is for positioning, orienting and fixing the piece and also for conducting the abrasive fluid to the areas which have to be processed, and in this way it is assured the work interstice in the processed areas, so the other surfaces of the part are unprocessed.
The main technological and functional characteristics of the equipment for processing by abrasive flow machining are:

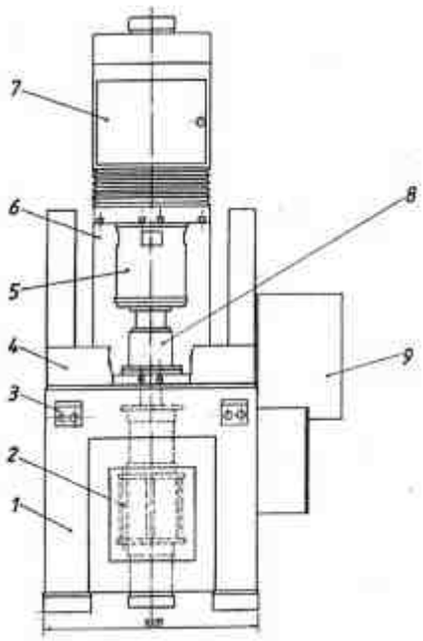

Figure 1. The AFM machine
1 frame, 2-cylinder, 3-mobile table, 4- work blade, 5- superior cylinder, 6- vertical beam, 7-work head, 8- work device, 9- support

- The work pressure for pneumatic cylinders: minimum 5 bar
- The cylinder diameter work head: 125 mm
- Cylinders diameter for processing: 200 mm
- The work cylinders diameter: 200 mm
- The stroke of all cylinders: 125 mm
- The capacity of the work cylinders: 5 liter
- The reopectic work average output: 60 l/min
- The viscosity of work medium: 10-12 Poise (Ns/m^2)
- The size of the abrasive particles: 0,005-1,5 mm
- The used abrasive material: SiC, Al_2O_3, diamond
- The adjustment coverage of the work medium temperature: 30-40C
- The high size of the procesed parts (xH): 200x120 mm
- The cycles number of the work cylindres: 20-40 cycles/minute
- The productivity: 10-150 pieces/hour
- The final roughness of the procesed pieces: minimum 0,002 mm
- The overall dimension of the device (LxlxH): 1020x840x2930 mm
- The net mass of the device: 1430 kg

Figure 2. Equipment for finishing by abrasive flow machining

By repeatedly extruding the media from one cylinder is pushed into the other, and abrasive action is produced as the abrasive media enter in a restrictive passage and travel through or across the work piece.
The machining action is similar to a grinding or lapping operation as the abrasive media gently polish the surfaces or edges [4].
When there is forced into a restrictive passage, the polymer carrier increases the medium's viscosity.
This holds the abrasive grains rigidly in place and abrade the passages only when the abrasive fluid is in thicken viscosity state.

4. Abrasive fluids' materials

In this project, a main aim is to obtain suitable fluids using ecological, safe and efficient materials.
Keeping these criteria there were used the following chemicals and materials.
Fluid component:
O - oleine contain mainly oleic acid with formula: $CH_3(CH_2)_7CH{=}CH(CH_2)COOH$;
ODT - diethanolamide of oleic acid containing about 20% TEA - thriethanolamine $N(C_2H_5OH)_3$ with OD amide, resulting from reaction of condensation of D- dietanholamine $HN(C_2H_5)_2$ with oleic acid, with water elimination as follows:

$$(C_2H_5OH)_2NH + HOOC(CH_2)_7CH{=}CH(CH_2)_7CH_3 \rightarrow (C_2H_5OH)_2NCO(CH_2)_7CH{=}CH(CH_2)_7CH_3 + H_2O \quad (1)$$

The ODT product offers many useful properties for AF fluid like increasing viscosity, emulsifying corrosion inhibition and lubrication.
O-ppg and O-mpg are two esters of acid oleic O with Ppg poly propylene glycol, short chain polymer of Mpg mono propylene glycol of formula: CH_3-CHOH-CH_2OH.
H_20 - the water in some circumstances is an useful additive to enhance the viscosity and reopecticity of the fluid.
Beside of those main components can used also another minor additives.
Abrasive materials used in these preliminary samples of AF are for the beginning only three:

- *Alumina*, aluminum oxide Al_2O_3, fine power grains of 3 - 70m;
- *Silicone carbide,* SiC, fine power grains of 6 - 63m;
- *Silica,* silicium dioxide SiO_2, fine power grains of 48m;

The hardness values of abrasive powders used are very high in the Mohs scale:
Al_2O_3 - 9, SiC - 9 and SiO_2 - 9.
The highest value in this scale is the hardness 10 for the diamond.
In the next extended research we intend to use also other abrasive materials in order to increase the value of the nanofinishing work.
Using the chemicals and materials presented above we tried to obtain several abrasive fluids for AFM method.
The mixture of these components, in different ratios, is obtained under high stirring.
The effect of great interest is the reopecticity of the AF viscous resulted fluid.
The reopecticity is crucial for nanofinishing, because it means the increase of viscosity of the fluid under mechanical force; the abrasive grains abrade only in this viscous state where they hold rigidly in place.
The viscosity of the fluid returns to initial state when it exits the restrictive passage.

The preliminary abrasive fluid obtained considering the above stated principles are presented the next two tables.

In Table 1, there was used as the main component the carboxyamide OD with TEA-triethanolamine added ODT and in the Table 2 was used as main component the ester O-PPG.

Table 1. Abrasive fluids (AF), on ODT base

Component/ Sample	ODT (%)	O (%)	Abrasive (%)	H_2O (%)	PPG (%)	η (poise)	Abraziv nature
1a	25	25	10	40	-	~16	1:1 SiC / Silica
1a*	40	10	10	40	-	~25	1:1 SiC / Silica
1b	20	22	8	46	4	~14	1:1 Silica / Al_2O_3
1b*	20	24	8	46	2	~20	1:1 Silica / Al_2O_3
1c	40	30	10	-	20	~12	Al_2O_3
1c*	40	40	10	-	10	~16	Al_2O_3

Table 2. Abrasive fluids (AF), on O-PPG base

Component/ Sample	O-PPG (%)	O (%)	Abrasive (%)	Apă H_2O (%)	TEA (%)	η (poise)	Abraziv nature
2a	35	20	10	25	10	~12	1:1 SiC/ Silica
2a*	35	30	10	15	10	~20	1:1 SiC/ Silica
2b	30	20	10	30	10	~10	1:1 Silica / Al_2O_3
2b*	40	25	10	10	15	~25	1:1 Silica / Al_2O_3
2c	25	35	10	20	10	~10	Al_2O_3
2c*	30	35	10	15	10	~15	Al_2O_3

The next samples of AF show a different composition because both main components ODT and O-PPG were used in all samples and only one abrasive; calcined alumina with finest grain of 2,9-3,1m.

These samples are presented in the Table 3. It must notice that the ester O-mpg (mono propylene glycol is very similar with the previous O-ppg (polypropylene glycol) used in samples of Table 1 and Table 2 and is easier to obtain a reproducible chemical structure.

Table 3. Abrasive fluids (AF), on Odt and Mpg base

Component / Sample	ODT (%)	O (%)	Alumina (%)	PPG (%)	O-MPG (%)	η (poise)
F1	30	30	5	10	25	15
F2	25	35	10	5	25	12
F3	25	45	5	-	25	10
F4	25	35	10	-	30	14

Characteristic of abrasive fluids (AF)

Due to the complexity of the AF samples their characterization is very difficult as well as the correlation of the fluids'composition with the efficiency in the nanofinishing process.

In this preliminary work the main characteristics of the samples were determined as follows:

* *Stability and the homogeneity*

The stability is good in time, between several weeks to several months, when the sample does not present the phases separation.

After separation the sample returns to the initial state. The homogeneity is good by visual observation but in the future a better microscopic analysis of structures will be correlated with the nanofinishing process.

* *Viscosity*

Viscosity is also a parameter difficult to determine it, because, as it was before explained, it is variable during homogenization due the reopecticity. The values given in the tables 1-3 for initial viscosity are only approximated.

** Viscosity dependence with the temperature*
Viscosity dependence with temperature is also very important, because it has to be as small is possible. The most of samples are quite stable with the temperature increasing until 700C when they became more fluid but after, they return to the initial values by decreasing the temperature.
** Reopecticity*
Reopecticity is a mechanical property of the fluids and represents the increasing of the fluid viscosity under mechanical pressure [3], it depends essentially of the mechanical parameters of the AFM machine and so can be evaluated quantitative during de nanofinishing process.

5 Conclusions

By applying the finishing technology with reopectic mediums, they can be processed simple or complex surfaces of the parts, which are made from materials with high hardness, in the conditions of time and processing costs reduction.
Also, the nanofinishing by abrsive flow machining with reopectic work mediums involves: the surfaces' quality growing by reducing the roughness, the diminution of the deviation from the shape and also the relative position of the surfaces and the improvement of the loadings state in the superficial layer.
In spite of the preliminary character of the obtained results, they reveal many possible formulations for the abrasive fluid compositions. This will allow us to choose the most suitable abrasive fluids for any specific application.
Between the most important applications of the AFM process, there are the following: the finishing and the trimming of the critics components of the hydraulic systems, the trimming of the distributors, used in the craft area, the edges filleting and polishing in only one operation for the bearings pockets, the trimming and the polishing of the bodies for Diesel engines injectors, the finishing of the parts made for the surgical implants, the hard layer of fragile materials removing, the polishing of the active sides of the dies, the polishing of the turbines for aircrafts' engines, etc.

6 References

[1] Research regarding the achievement of the work mediums for the nanofinishing process by using the abrasive flow machining with reopectic mediums- Contract CEEX -REOFIN 296/2006, ICTCM;
[2] Petri, K. L., Billo, R.E., Bidanda, b., Neural network process model for abrasive flow operations, Journal of Manufacturing Systems, Vol. 17, No.1, 1998.
[3] Perry, K.E. Abrasive Flow Machining Method and Tooling, Patent USA.
[4] Ionescu. N., Special technologies, U.P.B., Romania.

A METHOLOGY FOR THE REFLOATING STRANDED SHIPS

METODOLOGIE DE RANFLUARE A NAVELOR ESUATE

Constantin CHIRIÞÃ*, Gheorghe PLEª U *, Daniel CALFA** ,Adrian Constantin HANGANU**, Corneliu Constantin DUCA** and Dumitru SIRBU*

Submitted:
Accepted:

** Technical University "Gheorghe Asachi"*
Faculty of Machine Manufacturing and Industrial Management
Iasi, Romania,
e-mail: disahp@disahp.net
*** Hydramold Company,*
Iasi, Romania,
e-mail:hydramold@hydramold.com

Abstract. *This article presents a modern technology for refloating stranded ships by using a complex hydraulic equipment drawing.*
Key words: *refloating ship, hydraulic equipment*

1. Introduction

The refloating naval craft is surgery that aims to raise technological vessels to the bottom of rivers and their restoration afloat or removing wrecks and cleaning of rivers, river for shipping traffic on the sector reinsurance bad.
The refloating operations involves high cost, equipment lifting / pulling heavy, human effort and also depends on many factors: the depth of the river, the degree of pollution of water, weather conditions, possibilities for the location equipment, refloating methodology etc.
Also, surgery refloating ship is complex because it requires preparation and operations, and namely: the firing of the chains binding wreck, wreckage cutting into 2 or more segments depending on its length, anchoring equipment drawing etc.

2. Technologies for refloating stranded ships

According to those mentioned above, as technologies for refloating ships, are used:
- anchoring, lifting and putting on barges with the naval cranes (Fig.1);
- drawing on the shore with pulling equipment (Fig.2);
- towing ships lowtonnage using tugs
- return and refloat by inflating the inflatable balloon mounted inside of the ships (Fig.3).

Fig.1 The refloating ships with naval cranes

Fig.2 The refloating ships with puller equipment

Fig.3 The refloating ships used inflatables balloons

In the following, Hydramold company experts presents a method of refloating stranded ship based on wreck mechanical cutting and pulling on shore of segments sectioned, using a hydraulic drawing equipment.

3. Hydramold's methodology for refloating stranded ships

3.1. *The mechanical cutting of the stranded ships*

According with hydraulic diagrams (Fig.4) the hydraulic drawing equipment can operate in three modes of working:
- automatically „cutting" operating mode;
- automatically "synchronous speed" operating mode;
- „manual" operating mode.

3.1.1. *Automatichally "Cutting" operating mode.*

Requires work in tandem to the two drawing systems (one running motion of advance and the other motion to withdraw) and thus moving forward-back chain one race than 2 m. During this procedure can be done to curtail the movement of one fictitious load on the route shooter chain running race withdrawal.

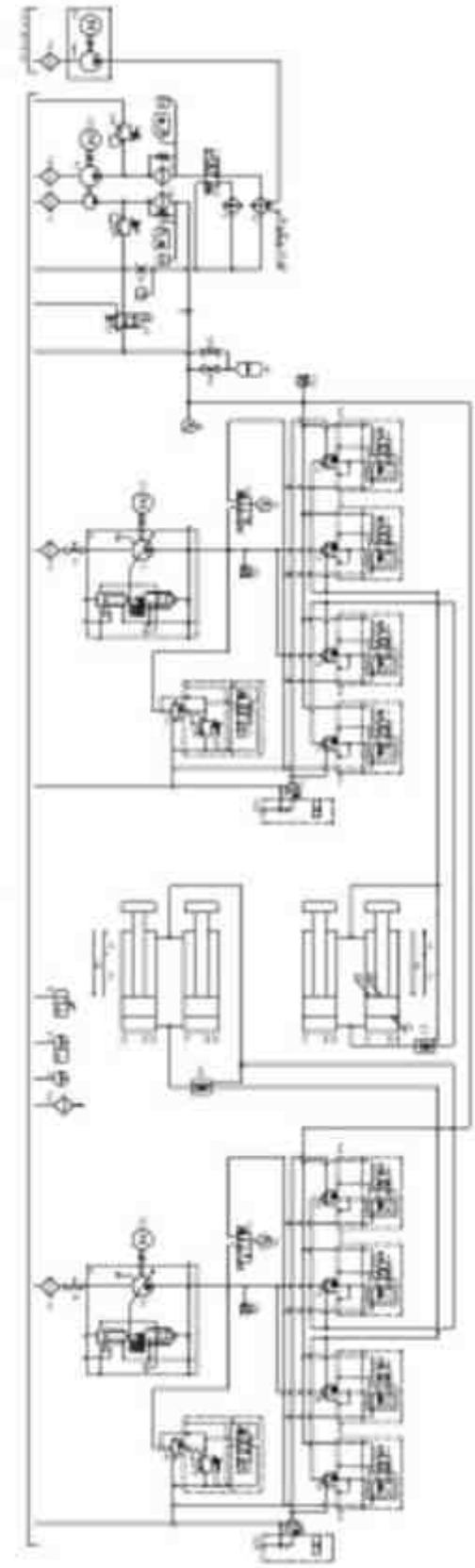

Fig.4 Hydraulic diagram

This is achieved by mounting the circuit advance to the second pulling. Chokes valves of sense to curtail the movement of cylinders in the movement of withdrawal. The return movement of hydraulic cylinders to end position is achieved automatically through commands received from PLC.

3.1.2. *Automatically "Synchronous Speed" operating mode*

Involves displacement of both synchronous drawing systems, with a maximum gap of 5 mm. Synchronizing movement is monitored by the PLC entering the electrical design structure that receives signals from the displacement transducers mounted on each drawer. Drawing hydraulic equipment is mobile and can be built in the interest of the beneficiary.

3.1.3. *Manual operating mode*

Involves attending the following steps:

? starting the pump M3 by pressing control circuit pump and achievement in the circuit to operate pressure preset;

? starting the pump M1 (M2) on the remote control and is expected to enter their normal working arrangements (motor drive is coupled to the "Ä");

? to make the cylinders advance switches switch the GROUP 1 COMMAND (GROUP 2 COMMAND) from the remote control on the ADVANCE position;

to make the cylinders return switches switch the GROUP 1 COMMAND (GROUP 2 COMMAND) from the remote control on the RETIRED position.

3.2. *Drawing on the bank of the vessel segments sectioned*

Removing the shore of the segments of the vessel is being sectioned using port crane or hydraulic equipment using the same drawing. If recourse to the second removal procedure systems work synchronized firing of 300 tf.

In figures 5-8 is given stages of a race to achieve full drawing (complete cycle of a drawdown) of a hydraulic cylinder. Is then repeats this cycle.

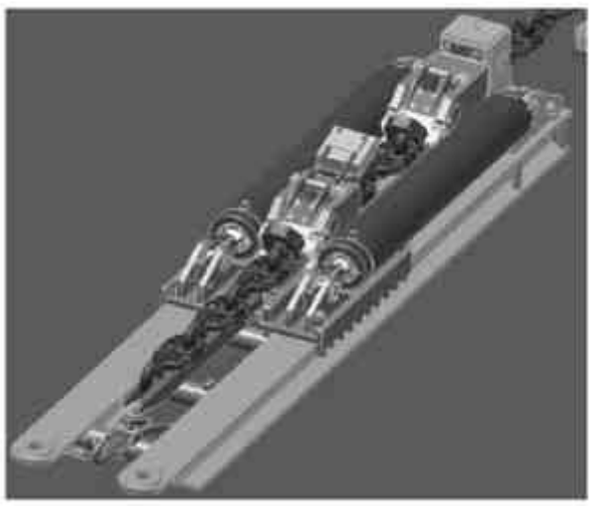

Fig.5 Cylinders withdrawn, tensioner chain initiation - balanced latch in the closed position (blocking chain), fixed latch free -

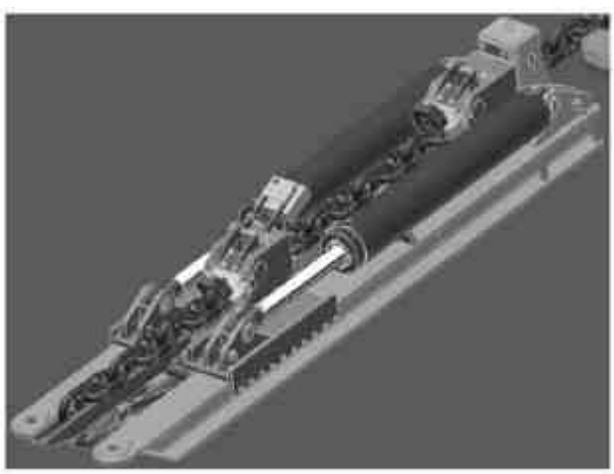

Fig.6 Pulling devide in the intermediate position, tensioning chain initiation - balanced latch in the closed position (blocking chain), fixed latch free, retaining claw chain in position tilt -

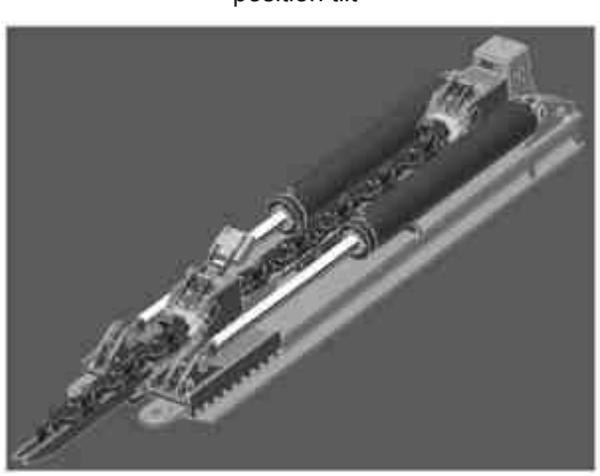

Fig. 7 Hydraulic cylinder in end position, chain tension, firing sequence 1 - block retaining claw chain, chain fixed latch blocked (blocking chain), balanced latch in the open position -

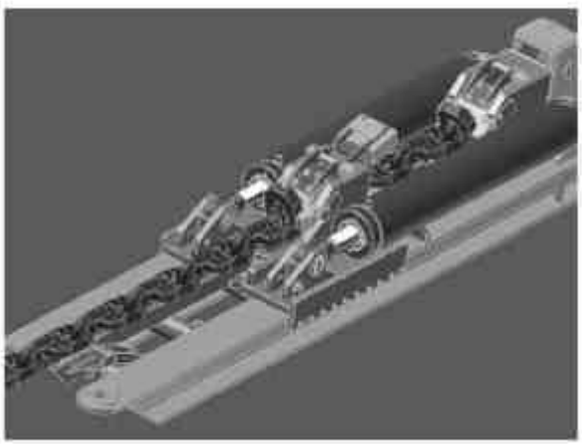

Fig.8 Hydraulic cylinders are withdrawn, the chain remains tense
- block retaining claw chain, chain fixed latch blocked (blocking chain), balanced latch in the open position -

4. The mechanical structure of the hydraulic drawing equipment

4.1. *Technical characteristics*

The technical characteristics of the hydraulic drawing equipment are presented in Table 1.

The hydraulic drawing equipment consist the following base parts:
a) hydraulic power module (Fig.8);
b) hydraulic drawing systems (Fig.10).

Table 1
Technical Characteristics

Parameter	U.M.	Value
Maximum working pressure	bar	215
Max/min piloting pressure	bar	100/215
Maximum flow rate	l/min	200
Flow rate at maximum pressure	l/min	112
Maximum pulling force	tf	700
Maximum working force	tf	600
Maximum working stroke	mm	2.000
Installed capacity	kW	59
Overall dimensions (L*l*h)	mm	12.895*3.160*1.800
Mass	kg	22.246

2.2. *Hydraulic power module*

The hydraulic power module prov necessary working pressure for h drawing systems and consist the f components:

? **support framework** made of two welded constructions (the upper framework and the lower framework) coupled together by screws. The lower framework serves as support for two variable displacement pumps and hydraulic oil reservoir and the upper framework serves as support for switchboard and front panel devices and is provided with ears hanging to manipulation;

Fig.8 Hydraulic power module

? **hydraulic oil reservoir** with manholes for cleaning and inspection, absorption flanges for the pumps, oil lever indicator, vent plug and oil drain plug;
? **power panel** consist all electrical equipments;
? **control panel** displays all working parameters (Fig.9);
? **control and regulation valves**.

Fig.9 Control panel

2.3. *Hydraulic drawing systems*

Consist the following components (Fig.10)
? **chassis** made in welded construction is composed of two heavy, linked together by side-members. This subset is formed as a support for sled pulling head and ears mounted at the rear of the chassis is made catching hydraulic cylinders. The chassis is fitted with lugs for anchoring drawing systems, his structure to allow downloading of force, strains of which are exclusively in the elastic. The bottom of the chassis is plated with tin, thus ensuring a better shooter stability during operation;
? **sliding support chain** is articulated on the head drawing and keep the chain in the proper position so that passage through the blocking device to make in optimal conditions (without twisting it at the blocked device)
? **head drawing** made in welded steel construction, coupled with being on the chassis plaque clearance and is related to the two hydraulic cylinders for operating the connecting bolts. Head drawing is mounted balanced bolt with which the training is done by pulling the chain. Drawing on the chassis sliding head is driven by two hydraulic cylinders. The motion to advance causes, by closing automatic balanced bolt, chain pull, and the motion to withdraw latch opens automatically, the chain remains stuck in the latch housing mounted (bolt fix), and occurs as the head of drawing and preparation of withdrawal it to a new drawing phase;
? **chain guide stand** placed at the rear of the chassis and is designed to guide and properly oriented chain entering the system drawing;

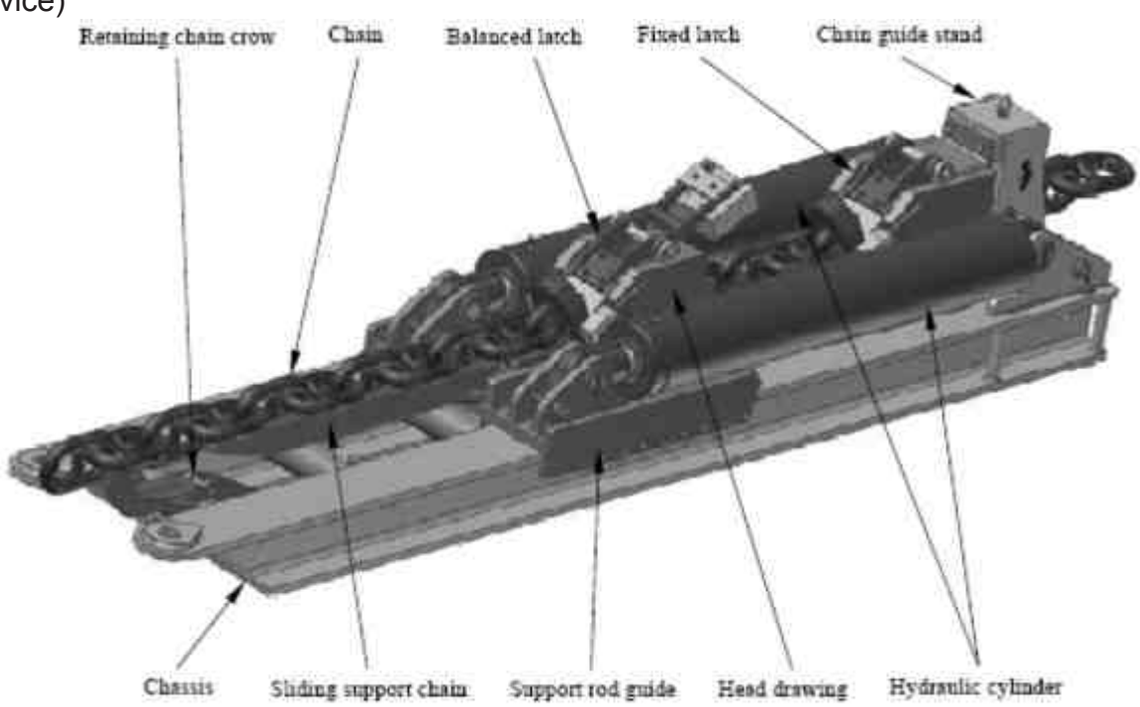

Fig.10 Hydraulic drawing systems

? **hydraulic cylinders** are articulated on the chassis mount through bolts and stick their head is coupled by bolts of fire. Hydraulic cylinders made successive movements of drawing with a speed VAT > 0.32 [m/min];

? **fixed latch** is to block the withdrawal phase chain drawing head movement allowing him by drawing system in the phase advance of the head fire.

Keeping working temperature of fluid is ensured by a hydraulic cooling circuit consisting of a electro-pump water and a heat change. Switch ON / OFF electro-pump is automatically depending on the oil temperature from reservoir, or manually from the panel display of functional parameters.

The ADVANCE - WORKING PRESSURE DIAGRAM is presented in Fig.11.

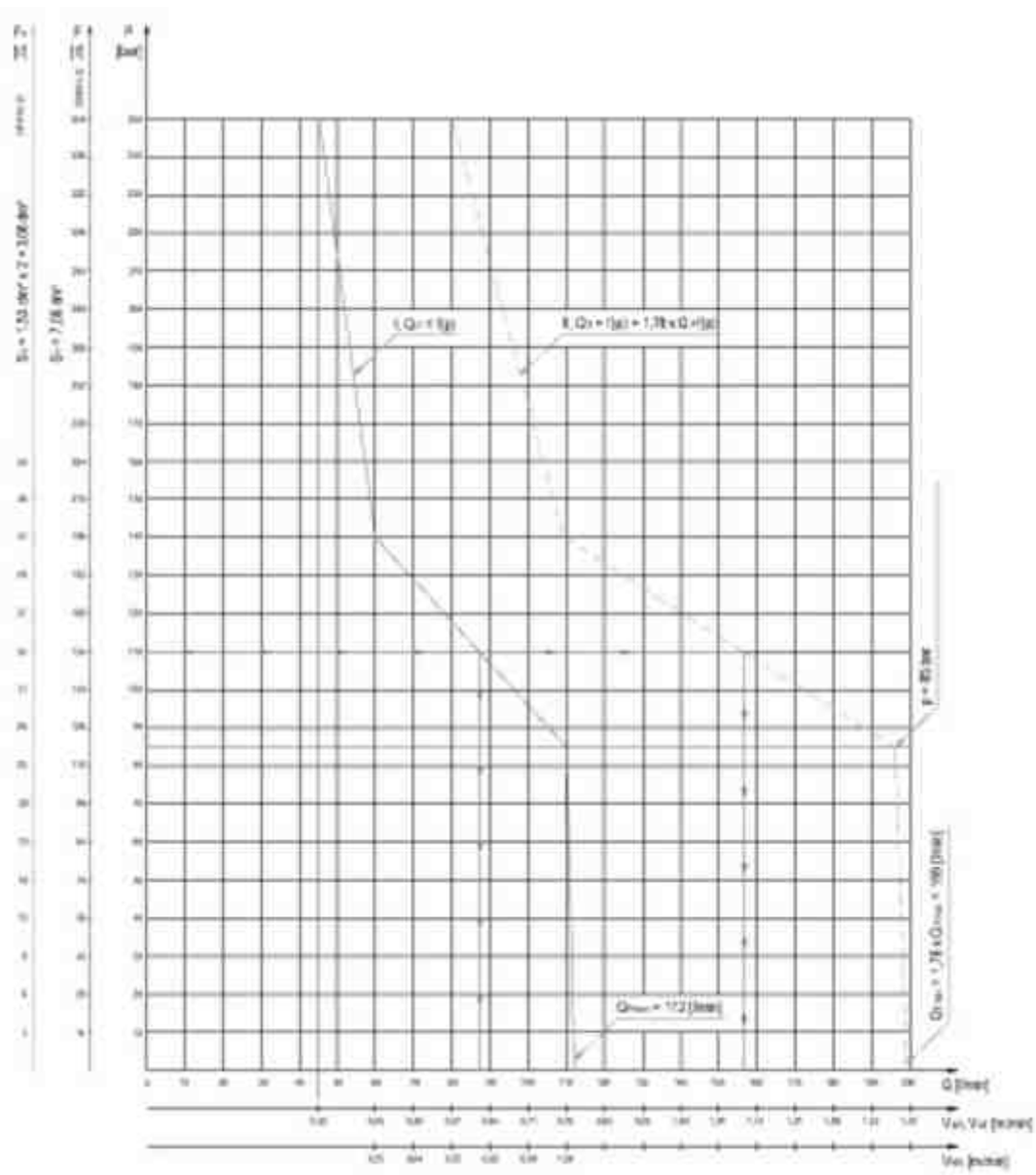

Fig.11 Advance-Working Pressure Diagram

4. Conclusion

1. Because the equipment is built on modules this is ensure a high mobility and can be moved quickly and placed in any place of work.
2. Depending on the tonnage of the refloating ship, the number of the drawing systems can vary, their supply hydraulic oil pressure is only making a single hydraulic pressure module.
3. In the case of the heavy diving ships, replaces the successful use of floating cranes for refloating.

R E F E R E N C E S

1. C h i r i t a C., *Actionari electrohidraulice.* Ed. Satya, **2000**.
2. C h i r i t a C., C a l a r a s u D., *Actionarea hidraulica a masinilor unelte.* Ed. Panfilius, **2001**.
3. www.hydramold.com.

ALGORITHM FOR CALCULATING THEORETICAL COMBUSTION TEMPERATURE

Gl. Bg(r) prof.univ.dr.ing Tudor CHERECHEª **
Col. drd. ing. Tiberiu HOMUTESCU *
Lector univ. dr.ing. Adrian ROTARIU **
Lt. asist. univ. drd. ing. Alin-Constantin SAVA **
*SPP, Academia Tehnica Militara, MNA PRODCOM**

Abstract

The grenade throwers with high-low pressure chamber, named grenade throwers with 2 pressure chambers or working on the principle of the gas motion, belong to the class of weapons working due to gas flow. The gas generated as a result of the powder combustion in the combustion chamber (the high pressure chamber) are moving through some orifices to the low pressure chamber where they increase the speed of the grenade. The theoretical studies focused on this kind of systems include the modelling of the black powder flow and of the combustion products during kindling and combustion. The interaction of the incandescent flux with a 2 phase flow in the loading chamber it is taken into consideration. Were performed experimental studies focused on the working of the detonating primers in the open air and on the throwing loads from the cartridge. It was found the impact of the characteristics of the detonating primer upon the combustion of the throwing loads. The theoretical model was tested comparing it with the experimental data. The theoretical and experimental tests make possible the optimum choice of the best detonating prime for starting the operation of throwing the load. The combustion of the gun powder during firing with a weapon is a complex phisical and chemical process. During it, takes place a very fast conversion of the kinetic energy of the gun powder in thermal gas energy then in kinetic energy of motion of the grenade,gun powder and barrell.

1. INTRODUCERE

Calculul termodinamic constã în determinarea temperaturii gazelor de ardere, în momentul realizãrii echilibrului chimic º i a celorlalte mãrimi asociate: compoziþia º i presiunea gazelor de ardere. Se deosebesc trei temperaturi de ardere:

- temperatura calorimetricã, care este temperatura pe care ar avea-o gazele de ardere dacã întreaga energie degajatã prin ardere serveº te la încãlzirea gazelor, temperaturã calculatã în capitolul întâi al referatului;
- temperatura teoretica de ardere, care tine seama de procesul de disociere al gazelor de ardere;
- temperatura reala de ardere care ia în considerare si pierderile termice prin peretii bombei manometrice.

2. TEMPERATURA TEORETICĂ DE ARDERE

Ipotezele care stau la baza calculului temperaturii teoretice de ardere sunt:

- produºii de ardere principali (CO_2, CO, H_2O, H_2, º i N_2), secundari (H, OH, NO, O2, º i O) º i combinaþii (NH_3, CH_4), sunt consideraþi gaze perfecte;
- reacþia este izocorã º i izentropicã;
- toatã cãldura de reacþie serveº te la încãlzirea produºilor de ardere.

La temperaturi înalte º i presiuni joase se formeazã o micã cantitate de produºi de disociere sau produºi secundari, cum sunt OH, H º i NO. La temperaturi foarte înalte, apar º i O_2, O º i N, dar în cantitãþi foarte reduse. Între produºii principali º i produºii secundari se stabilesc urmãtoarele echilibre chimice:

$$H \xleftrightarrow{K1(T)} \tfrac{1}{2} H_2, \qquad OH + \tfrac{1}{2} H_2 \xleftrightarrow{K2(T)} H_2O,$$

$$NO + H_2 \xleftrightarrow{K3(T)} \tfrac{1}{2} N_2 + H_2O, \qquad N \xleftrightarrow{K4(T)} \tfrac{1}{2} N_2,$$

$$O + H_2 \xleftrightarrow{K5(T)} H_2O, \qquad H_2 + \tfrac{1}{2} O_2 \xleftrightarrow{K6(T)} H_2O.$$

Constantele de echilibru $K_1(T)$, $K_2(T)$, ..., $K_6(T)$ se calculează cu ajutorul următoarelor relații:

$$K1(T) := \exp\left[\left(-15.802873 + 0.011259T - 2.94382910^{-6} \cdot T^2 + 2.85616610^{-10} \cdot T^3\right) \cdot \ln(10)\right]$$

$$K2(T) := \exp\left[\left(-22.679807 + 0.016879T - 4.65757510^{-6} \cdot T^2 + 4.69370810^{-10} \cdot T^3\right) \cdot \ln(10)\right]$$

$$K3(T) := \exp\left[\left(-20.526646 + 0.012632T - 2.98101710^{-6} \cdot T^2 + 2.66491110^{-10} \cdot T^3\right) \cdot \ln(10)\right]$$

$$K4(T) := \exp\left[\left(-1.20091610^{-5} - 0.011425T + 5.88416510^{-6} \cdot T^2 - 7.9592910^{-10} \cdot T^3\right) \cdot \ln(10)\right]$$

$$K5(T) := \exp\left[\left(-1.35641110^{-5} - 0.0112905T + 6.7608510^{-6} \cdot T^2 - 9.03385410^{-10} \cdot T^3\right) \cdot \ln(10)\right]$$

$$K6(T) := \exp\left[\left(-135261110^{-5} - 0.013128T + 6.78753310^{-6} \cdot T^2 - 9.02976810^{-10} \cdot T^3\right) \cdot \ln(10)\right]$$

Variațiile în funcție de temperatură ale constantelor de echilibru sunt reprezentate în figurile 1-4:

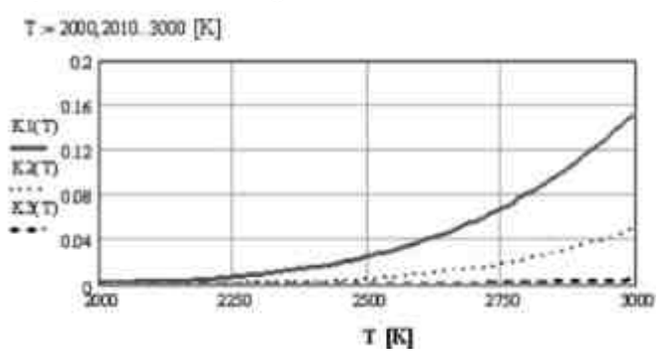

Fig.1 - Variația cu temperatura a constantelor de echilibru K1, K2, K3

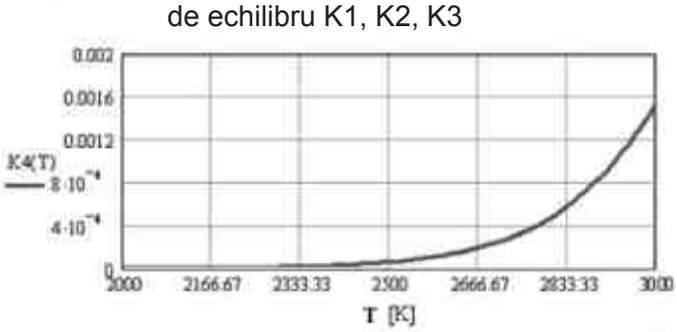

Fig.2 - Variația cu temperatura a constantei de echilibru K4

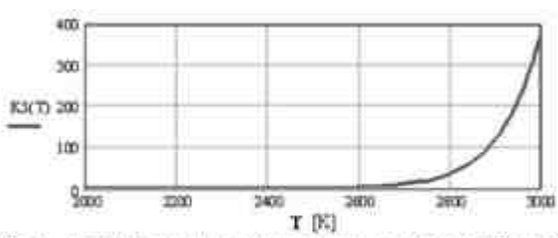

Fig.3 - Variația cu temperatura a constantei de echilibru K5

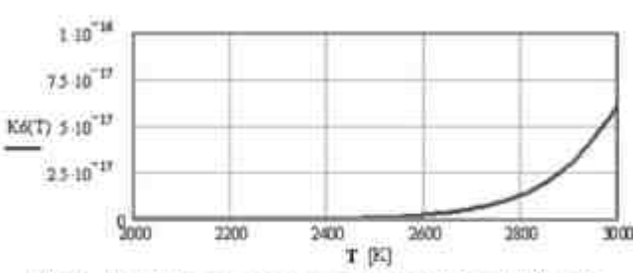

Fig.4 - Variația cu temperatura a constantei de echilibru K6

Cantitatea din fiecare produs de disociere n_H , n_{OH} , ..., n_N , variazã cu temperatura ºi este determinatã de constantele de echilibru ale reacţiilor de disociere. Scriind pentru fiecare reacţie de echilibru legea acţiunii maselor, se obţine următorul sistem:

$$\frac{n_H}{(n_H)^{\frac{1}{2}}} = \left(\frac{V}{RT}\right)^{\frac{1}{2}} \cdot K_1(T)$$

$$\frac{n_{OH}(n_{H2})^{\frac{1}{2}}}{n_{H2O}(n_{N2})^{\frac{1}{2}}} = \left(\frac{V}{RT}\right)^{\frac{1}{2}} \cdot K_2(T)$$

$$\frac{n_{NO}n_{H2}}{n_{H2O}(n_{N2})^{\frac{1}{2}}} = \left(\frac{V}{RT}\right)^{\frac{1}{2}} \cdot K_3(T)$$

$$\frac{n_N}{(n_{N2})^{\frac{1}{2}}} = \left(\frac{V}{RT}\right)^{\frac{1}{2}} \cdot K_4(T)$$

$$\frac{n_O n_{H2}}{n_{H2O}} = \left(\frac{V}{RT}\right)^{\frac{1}{2}} \cdot K_5(T)$$

$$\frac{n_{O2}(n_{H2})^2}{(n_{H2O})^2} = \left(\frac{V}{RT}\right)^{\frac{1}{2}} \cdot K_6(T)$$

în care V [cm^3/g] este volumul specific al amestecului produºilor de combustie.

La temperaturi sub 2500 [K] ºi presiuni ridicate, devin semnificative încã douã reacţii de echilibru, între produºii principali ºi cei intermediari:

$$CH_4 + CO_2 \xleftrightarrow{K7(T)} 2CO + 2H_2,$$

$$2NH_3 \xleftrightarrow{K8(T)} N_2 + 3H_2.$$

Aplicând ºi pentru aceste reacţii legea acţiunii maselor rezultã ecuaţiile

$$\frac{n_{CH4}n_{CO2}}{(n_{CO2}n_{H2})^2} = \left(\frac{V}{RT}\right)^{\frac{1}{2}} \cdot K_7(T)$$

$$\frac{n_{NH3}}{(n_{N2})^{\frac{1}{2}}(n_{H2})^{\frac{3}{2}}} = \left(\frac{V}{RT}\right)^{\frac{1}{2}} \cdot K_8(T),$$

în care cu n_{CH4} ºi n_{NH3} s-au notat cantităţile de produºi intermediari.

Valorile constantelor de echilibru $K_7(T)$ ºi $K_8(T)$ se calculează cu relaţiile:

$$K7(T) := \exp\left[\left(14.888554 - 0.024789T + 9.57899010^{-6}\cdot T^2 - 1.37030310^{-9}\cdot T^3\right)\cdot \ln(10)\right]$$

$$K8(T) := \exp\left[\left(0.017168 - 4.37146410^{-3}\cdot T + 1.58182710^{-6}\cdot T^2 - 1.90539510^{-10}\cdot T^3\right)\cdot \ln(10)\right]$$

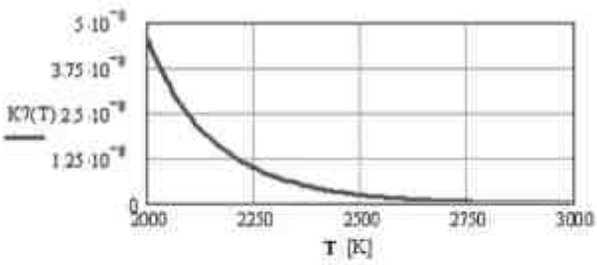

Fig.5 - Variaţia cu temperatura a constantei de echilibru K7

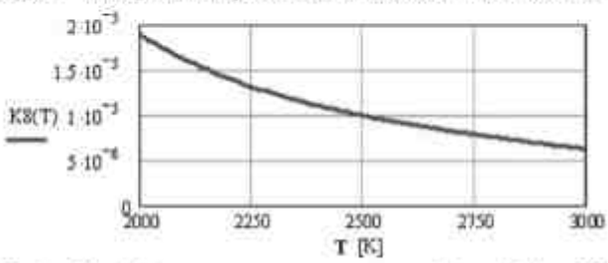

Fig.6 - Variaţia cu temperatura a constantei de echilibru K8

Cantităţile de produşi de combustie ce se formează la o anumită temperatură trebuie sa satisfacă legea conservării masei pentru fiecare specie atomică, deci:

$$n_{CO2} + n_{CO} + n_{CH4} = C,$$

$$2n_{H2O} + 2n_{H2} + 3n_{NH3} + n_H + n_{OH} + 4n_{CH4} = H,$$

$$n_{CO} + n_{H2O} + 2n_{CO2} + n_{OH} + n_{NO} + n_O + 2n_{O2} = O,$$

$$2n_{N2} + n_{NH3} + n_{NO} + n_N = N$$

unde:

$C = 0.022842$ $H = 0.029069$ $O = 0.036021$ $N = 8.711874 \times 10^{-3}$

Expresiile căldurilor molare izocore medii sunt:

Notaţii: w1→CO₂; w2→CO; w3→H₂O; w4→H₂; w5→N₂; w6→H; w7→OH; w8→NO; w9→N; w10→O; w11→O₂; w12→CH₄; w13→NH₃

$Cw1(T) := 33.371681 + 8.049960\cdot 10^{-3}\cdot T - 9.822960\cdot 10^{-7}\cdot T^2$ $\left(\frac{J}{molK}\right)$

$Cw2(T) := 19.675689 + 3.564411\cdot 10^{-3}\cdot T - 4.435241\cdot 10^{-7}\cdot T^2$ $\left(\frac{J}{molK}\right)$

$Cw3(T) := 21.364970 + 8.246747\cdot 10^{-3}\cdot T - 8.207324\cdot 10^{-7}\cdot T^2$ $\left(\frac{J}{molK}\right)$

$Cw4(T) := 18.639961 + 2.394259\cdot 10^{-3}\cdot T - 1.480876\cdot 10^{-7}\cdot T^2$ $\left(\frac{J}{molK}\right)$

$Cw5(T) := 19.547547 + 3.369193\cdot 10^{-3}\cdot T - 3.966538\cdot 10^{-7}\cdot T^2$ $\left(\frac{J}{molK}\right)$

$Cw6(T) := 12.477260 \quad \left(\frac{J}{molK}\right)$

$Cw7(T) := 18.881467 + 2.596448 \cdot 10^{-3} \cdot T - 1.928006 \cdot 10^{-7} \cdot T^2 \quad \left(\frac{J}{molK}\right)$

$Cw8(T) := 21.083365 + 3.049370 \cdot 10^{-3} \cdot T - 3.662147 \cdot 10^{-7} \cdot T^2 \quad \left(\frac{J}{molK}\right)$

$Cw9(T) := 12.477260 \quad \left(\frac{J}{molK}\right)$

$Cw10(T) := 12.477260 \quad \left(\frac{J}{molK}\right)$

$Cw11(T) := 22.041262 + 2.693466 \cdot 10^{-3} \cdot T - 2.329034 \cdot 10^{-7} \cdot T^2 \quad \left(\frac{J}{molK}\right)$

$Cw12(T) := 21.178199 + 3.063401 \cdot 10^{-2} \cdot T - 4.377946 \cdot 10^{-6} \cdot T^2 \quad \left(\frac{J}{molK}\right)$

$Cw13(T) := 21.719967 + 1.869517 \cdot 10^{-2} \cdot T - 2.489508 \cdot 10^{-6} \cdot T^2 \quad \left(\frac{J}{molK}\right)$

2.1 PRODUSE DE DISOCIERE

ORIGIN = 1

$TOL := 10^{-6}$

$V := 1.5 \quad R := 3.14 \quad z := \frac{V}{R} \quad z = 0.477707$

$w1 := 0.001 \quad w2 := 0.001 \quad w3 := 0.001 \quad w4 := 0.001 \quad w5 := 0.001$

$w6 := 0.001 \quad w7 := 0.001 \quad w8 := 0.001 \quad w9 := 0.001 \quad w10 := 0.001$

$w11 := 0.001 \quad w12 := 0.001 \quad w13 := 0.001$

Given

$\frac{w2 \cdot w3}{w1 \cdot w4} = K0(T) \qquad \frac{w6}{w4^{0.5}} = \left(\frac{z}{T}\right)^{0.5} \cdot K1(T) \qquad \frac{w7 \cdot w4^{0.5}}{w3} = \left(\frac{z}{T}\right)^{0.5} \cdot K2(T)$

$\frac{w8 \cdot w4}{w3 \cdot w5^{0.5}} = \left(\frac{z}{T}\right)^{0.5} \cdot K3(T) \qquad \frac{w9}{w5^{0.5}} = \left(\frac{z}{T}\right)^{0.5} \cdot K4(T)$

$\frac{w10 \cdot w4}{w3} = \left(\frac{z}{T}\right) \cdot K5(T) \qquad \frac{w11 \cdot w4^2}{w3^2} = \left(\frac{z}{T}\right)^{0.5} \cdot K6(T)$

$\frac{w12}{w1 \cdot w4^2} = \left(\frac{T}{z}\right)^2 \cdot K7(T) \qquad \frac{w13}{w5^{0.5} \cdot w4^{1.5}} = \left(\frac{T}{z}\right) \cdot K8(T)$

$w1 + w2 + w12 = 0.022842$

$2 \cdot w3 + 2 \cdot w4 + 3 \cdot w13 + w6 + w7 + 4 \cdot w12 = 0.029069$

$w2 + w3 + 2 \cdot w1 + w7 + w8 + w10 + 2 \cdot w11 = 0.036021$

$2 \cdot w5 + w13 + w8 + w9 = 3.711874 \cdot 10^{-3}$

T =	$w(T)_1$ =	$w(T)_2$ =	$w(T)_4$ =
2000	0.004924	0.017918	0.006275
2200	0.004689	0.018173	0.006024
2400	0.004442	0.0184	0.005856
2600	0.003949	0.018899	0.006048
2800	0.002188	0.020653	0.008221
3000	0.000507	0.022335	0.012296

$w(T)_5$ =	$w(T)_6$ =	$w(T)_7$ =	$w(T)_8$ =
0.004355	0.000002	0	0
0.004355	0.000007	0.000001	0
0.004355	0.000018	0.000005	0
0.004355	0.000041	0.000014	0.000001
0.004354	0.000097	0.000021	0.000001
0.004353	0.000217	0.000012	0.000001

$w(T)_9$ =	$w(T)_{10}$ =	$w(T)_{11}$ =	$w(T)_{12}$ =	$w(T)_{13}$ =
0	0.000001	0	0	0.000003
0	0.000006	0	0	0.000002
0	0.000067	0	0	0.000002
0	0.000756	0	0	0.000002
0	0.004716	0	0	0.000002
0.000001	0.010541	0	0	0.000004

$T := 2000, 2050 .. 3000$ [K]

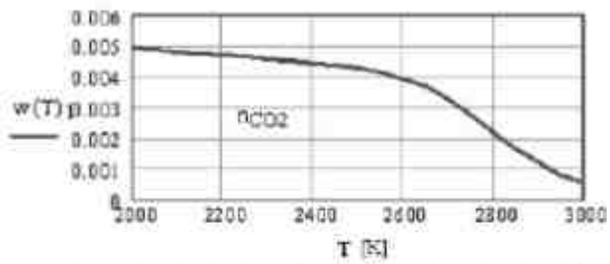

Fig. 7 - Variația cu temperatura a numărului de moli de CO_2 la un gram de propulsant

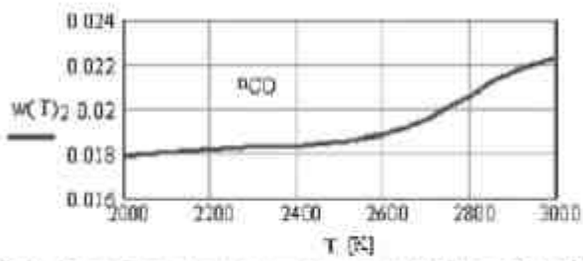

Fig. 8 - Variația cu temperatura a numărului de moli de CO la un gram de propulsant

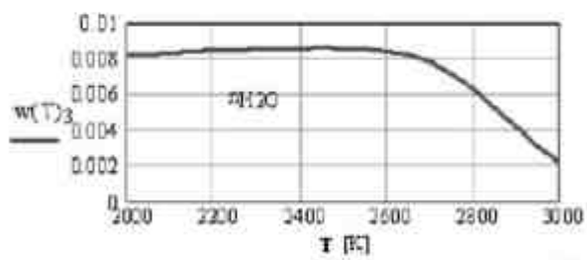

Fig. 9 - Variația cu temperatura a numărului de moli de H_2O la un gram de propulsant

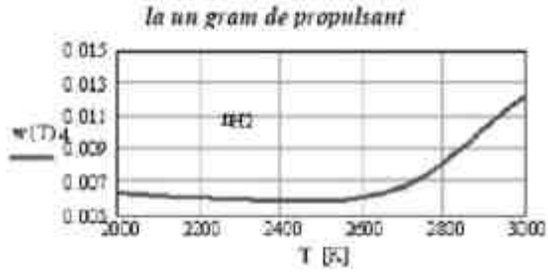

Fig. 10 - Variația cu temperatura a numărului de moli de H_2 la un gram de propulsant

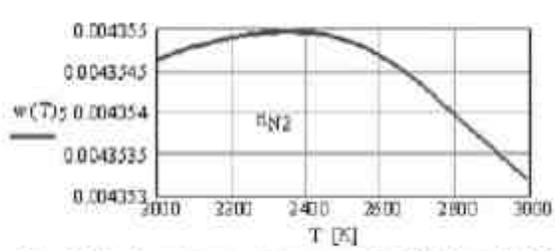

Fig. 11 - Variația cu temperatura a numărului de moli de N_2 la un gram de propulsant

2.2 ENERGIA INTERNĂ

$$E01(T) := (w(T)_1 \cdot Cw1(T) + w(T)_2 \cdot Cw2(T) + w(T)_3 \cdot Cw3(T)) \cdot (T - 300)$$

$$E02(T) := (w(T)_4 \cdot Cw4(T) + w(T)_5 \cdot Cw5(T) + w(T)_6 \cdot Cw6(T)) \cdot (T - 300)$$

$$E03(T) := (w(T)_7 \cdot Cw7(T) + w(T)_8 \cdot Cw8(T) + w(T)_9 \cdot Cw9(T)) \cdot (T - 300)$$

$$E04(T) := (w(T)_{10} \cdot Cw10(T) + w(T)_{11} \cdot Cw11(T) + w(T)_{12} \cdot Cw12(T)) \cdot (T - 300)$$

$$E05(T) := w(T)_{13} \cdot Cw13(T)$$

$$E0(T) := E01(T) + E02(T) + E03(T) + E04(T) + E05(T)$$

$$T := 2000, 2200 .. 3000 \ [K]$$

T	E0(T) [J/kg]
2000	2066.962
2200	2234.897
2400	2917.437
2600	2997.455
2800	3139.875
3000	3361.710

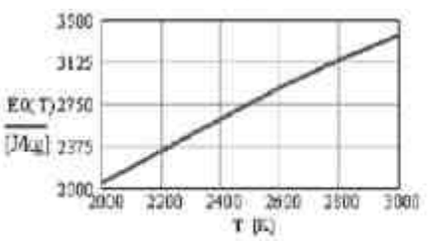

Fig. 12 - Variaţia cu temperatura a energiei interne a produşilor de reacţie

2.3 CĂLDURA DE REACŢIE

$$\Delta E_{Fp} = 2{,}63881 \cdot 10^3 \ [J/g]$$

$\Delta Ew1 := 397506.6$	$\Delta Ew2 := 108825.69$	$\Delta Ew3 := 238148.36$
$\Delta Ew4 := -2\,214.664$	$\Delta Ew5 := -2\,356.92$	$\Delta Ew6 := 214664.36$
$\Delta Ew7 := 38259.84$	$\Delta Ew8 := 98909.6$	$\Delta Ew9 := 465428.16$
$\Delta Ew10 := 0$	$\Delta Ew11 := 0$	$\Delta Ew12 := -73785.08$
$\Delta Ew13 := 43.46$		

$$\Delta Epa1(T) := w(T)_1 \cdot \Delta Ew1 + w(T)_2 \cdot \Delta Ew2 + w(T)_3 \cdot \Delta Ew3 + w(T)_4 \cdot \Delta Ew4$$

$$\Delta Epa2(T) := w(T)_6 \cdot \Delta Ew6 + w(T)_7 \cdot \Delta Ew7 + w(T)_8 \cdot \Delta Ew8 + w(T)_9 \cdot \Delta Ew9$$

$$\Delta Epa3(T) := w(T)_{12} \cdot \Delta Ew12 + w(T)_{13} \cdot \Delta Ew13$$

$$\Delta Epa(T) := \Delta Epa1(T) + \Delta Epa2(T) + \Delta Epa3(T)$$

$$Q_r(T) = \Delta E_{pa}(T) - |\Delta E_{fp}|$$

T =	ΔEpa(T) =	Qr(T) =
2000	5821.505362	3180.696362
2200	5810.3161	3172.0061
2400	5788.701227	3149.891227
2600	5602.219200	2998.409200
2800	4602.012361	1964.102361
3000	3173.241484	535.131484

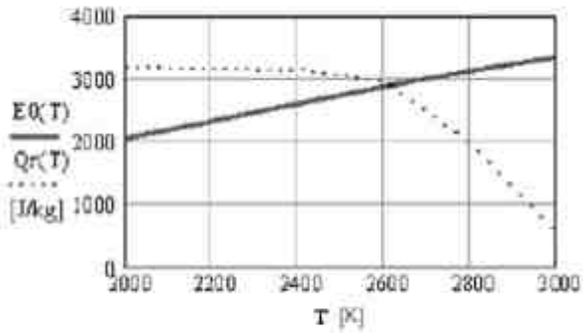

Fig. 13 - Graficele Energiei interne şi a Căldurii de reacţie

Determinarea temperaturii teoretice de ardere

T = 2600

$T_{teoretic}$ = root(Q_r(T)-E_0(T),T)

$T_{teoretic}$ = 2618, 866155 (K)

3. CONCLUZII

În aceastã lucrare se prezintã un algoritm pentru calculul temperaturii teoretice a gazelor rezultate în urma arderii în tubul cartuº.

POZIȚIA OPTIMĂ A FREATICULUI IN ZONA DE LUNCA ŞI FIABILITATEA GRUPULUI DE ECHIPAMENTE DE UDARE

OPTIMUM POSITION OF PHREATIC LEVEL IN THE MEADOW AND REALIABILITY OF WATERING EQUIPMENT BLOCK

C. NICOLESCU[1], D. BUCUR[2], Gh. ª OVÃIALÃ[3], I. BIOLAN[4]

[1,3] *Institutul Național de Cercetare-Dezvoltare pentru Optoelectronică (INOE 2000)- Filiala Institutul de Cercetări pentru Hidraulică şi Pneumatică Bucureşti,*
nicolescu.ihp@fluidas.ro
[2]*- Universitatea de Ştiințe Agricole şi Medicină Veterinară Iaşi*
dbucur@univagro-iasi.ro
[4]*- Institutul Național de Cercetare Dezvoltare pentru Îmbunătățiri Funciare <ISPIF> Bucureşti*
ilie_biolan@yahoo.com

Abstract: *The irrigation arrangements are conceived, designed, realized and exploited as ecological engineering works, flexibly dimensioned depending on the change in time of some climatic elements found by studies.*
The researches were performed in a representative region of Romania, involving digging and irrigation works on drained land. The experimental field has a surface of 4 ha and it is located in the meadow research worksite of INCDIF Baneasa, Giurgiu county.
The dimensioning of the regularization network with double action is made using the concept of maximum capitalization of the phreatic water inside the plot, being defined the intervals of variation of the phreatic level for realizing drainage/discharge-irrigation and storage of water in the plot.
The method of capitalizing land results from the selection of the plant depending on the best location of the phreatic level.
In Romania the irrigated land with economic efficiency is estimated at 3,5 millions ha. In what regards the irrigation method, about 80% of the land surface is suitable for sprinkling. The lowest price is that of the watering installation which is manually moved. The watering position may be parallel or perpendicular on the direction of the sector delivery pipe. The selection of a watering position may depend on the value of its reliability. The watering installation is composed of elements of distribution (sprinklers) which are serially connected.

Key words: subirrigation, land improvements, plants, phreatic location, sprinkler.

Una dintre caracteristicile etapelor actuale º i de perspectivã privind dezvoltarea economicã a societãþii constã în necesitatea utilizãrii raþionale a resurselor naturale, ca urmare a decalajului tot mai pronunþat dintre caracterul limitat al acestora, variaþia uneori anualã º i dinamica cerinþelor. În acest context, buna gospodãrire a apei prezintã o importanþã deosebitã în condiþiile în care resursele de apã ale României sunt relativ reduse.

Amenajãrile de irigaþie se concep, proiectează, realizează º i exploatează ca lucrări naturalist- inginereº ti, dimensionate flexibil în raport cu modificarea în timp a unor elemente climatice, furnizate prin studii.

Pentru a se încadra în dezvoltare durabilã º i ca urmare a schimbãrilor climatice preconizate, agricultura va creº te solicitarea de tehnologii º i echipamente noi pentru valorificarea mai eficientã a apei de irigaþie [8,9,10].

Orice domeniu de activitate - º i îndeosebi cel tehnic, în care se înscriu º i hidroameliorațiile - este pretabil º i accesibil modernizãrilor (soluþii, materiale, echipamente, tehnologii, etc.), corespunzãtor unor cerinþe noi, generate în special de progresul tehnologic.

MATERIAL ŞI METODĂ

1) Folosirea apei freatice în incinta Gostinu-Greaca-Argeş

Amenajãrile de îmbunãtãţiri funciare din aceastã zonã a României sunt constituite din îndiguiri şi irigaţii pe fond desecat-drenat.
Factorii cauzali implicaţi în accentuarea duratei şi intensitãţii excesului de umiditate sunt de naturã dinamicã (creşterea nivelului freaticului ca urmare a punerii sub presiune a acviferului de cãtre Dunãre), staticã (complexul de suprafaţã cu granulometrie finã, microrelief depresionar) şi tehnologicã (reţeaua absorbantã cu distanţa între drenuri mai mare).
Creşterea componentei hidrice pânã la starea de excedent, în astfel de situaţii, conduce, dacã nu se iau mãsurile tehnice corespunzãtoare, la o evoluţie a geosistemului de la morfosistem cãtre hidrosistem. Locaţia de desfãşurare a cercetãrilor este în perimetrul Institutului Naţional de Cercetare-Dezvoltare pentru Imbunãtãţiri Funciare < ISPIF > baza Bãneasa, (fost ICITID Bãneasa), aflat în Lunca Dunãrii, în incinta Gostinu- Greaca Argeş, judeţul Giurgiu.
Câmpul experimental are suprafaţa de 4 ha şi este amplasat la 6,3 km de Dunãre, în centrul depresiunii interioare a zonei de luncã. Acesta face parte dintr-o amenajare de desecare-drenare realizatã în intervalul 1968-1970. Suprafaţa interioarã este de 1484 ha, iar a zonei de luncã de 2472 ha.

2) Fiabilitatea grupului de instalaţii

2.1.) Considerente matematice privind fiabilitatea

Suma dintre funcţia de fiabilitate F (t) şi funcţia de defiabilitate D(t) este 1. Din aceastã condiţie rezultã cã F (t) 1 şi D(t) 1.
Fiabilitatea individualã F_t reprezintã:

$$F(t) = e^{-\int_0^t \lambda(t)dt} \qquad (1)$$

În cazul particular cu ? = constant, F_t are urmãtoarele valori extreme: la t = 0 rezultã F_t =1 şi la t = ? rezultã F_t = 0.

Din motive economice, tehnologia modernã nu foloseşte produse cu F < 20 % .
Numãrul de avarii în unitatea de timp se defineşte prin *funcţia de risc* (?(t)).
Durata probabilã de funcţionare fãrã avarie t este inversul funcţiei de risc şi reprezintã durata medie între douã avarii consecutive. Durata t mare implicã risc mic.

$$\tau = \int_0^\infty F(t)dt = \frac{1}{\lambda} \cdot e^{-\lambda t} \qquad (2)$$

Elementele componente ale unei instalaţii de udare sunt conectate în serie iar instalaţiile se conectezã în paralel la conducta de alimentare.

REZULTATE ŞI DISCUŢII

1) Poziţia optimã a nivelului freatic în scopul folosirii bivalente a reţelei de drenaj

În dimensionarea reţelei cu dublã funcţionalitate se pleacã de la conceptul de valorificare cât mai mult a apei freatice în interiorul parcelei şi de stocare a surplusului în sensul de irigat pe reţeaua de evacuare, pentru a putea fi reutilizat prin irigarea de la suprafaţa solului.
Cunoscând legea de variaţie a umiditãţii solului deasupra nivelului apei freatice, se pot stabili în funcţie de proprietãţile hidrofizice ale tipului de sol şi ceilalţi factori cauzali (temperatura aerului, precipitaţii, consumul plantei), care este adâncimea necesarã a nivelului freaticului, astfel ca umiditatea pe stratul fiziologic activ de sol (SFAS), sã fie între capacitatea de apã în câmp (CC) şi plafonul minim de declanşare al udãrii (P_{min}).
Sursa principalã care contribuie la formarea excesului de umiditate este reprezentatã în principal de freatic şi în secundar de precipitaţii.
Reţeaua absorbantã este reprezentatã de tuburi riflate, pozate la adâncimea de 1,0 1,2 m şi la distanţa de 20 -25 m. Colectarea apei se face în canale deschise sau drenuri colectoare .
Modelul matematic specific condiţiilor hidrogeologice din Lunca Dunãrii se bazeazã pe urmãtoarea corelaţie dintre umiditatea solului pe o anumitã adâncime a SFAS şi factorii determinanţi:

$$U = CO + (C_s - CO) \cdot e^{-cH_f} \qquad (3)$$

unde :

U = umiditatea medie a solului pe un anumit interval de timp și pe o anumită adâncime (H), exprimată în % din greutate;

CO, C_s = coeficientul de ofilire și capacitatea de saturație a solului pe adâncimea H, în % din greutate;

e = baza logaritmilor naturali;

H_f = adâncimea nivelului freaticului față de cota terenului ca medie pe un anumit interval de timp, exprimat în metri;

c = parametru însoțit de semnul minus, determinat printr-un set de 21 tipuri de ecuații de regresie, funcție de unul dintre factorii climatici sau biologici.

Intervalele de variație ale nivelului freatic sunt următoarele:

- realizarea funcției de drenaj evacuare:

$$(H_f)_{CS} \quad H_p < (H_f)_{CC} \qquad (4)$$

- realizarea irigației :

$$H_f = (H_f)_{Pmin} \qquad (5)$$

- intervalul optim de reținere a apei în parcela de drenaj, folosind diverse soluții și procedee tehnice:

$$(H_f)_{Pmin} < \; H_f \; (H_f)_{CC} \qquad (6)$$

În fig. 1, se prezintă pentru un studiu de caz, graficul de variație al umidității solului, deasupra nivelului freaticului, în funcție de variația decadală a freaticului și a temperaturii aerului, în intervalul aprilie-iunie. Poziția adâncimii nivelului freatic se alege în funcție de tipul plantei și de modul de valorificare al apei.

De asemenea, la stabilirea tipului de plantă se ia în connsiderație și intensitatea diurnă a fotosintezei specific categoriilor de plante (tab.1), influențând efectul de fixare al CO_2 din aer.

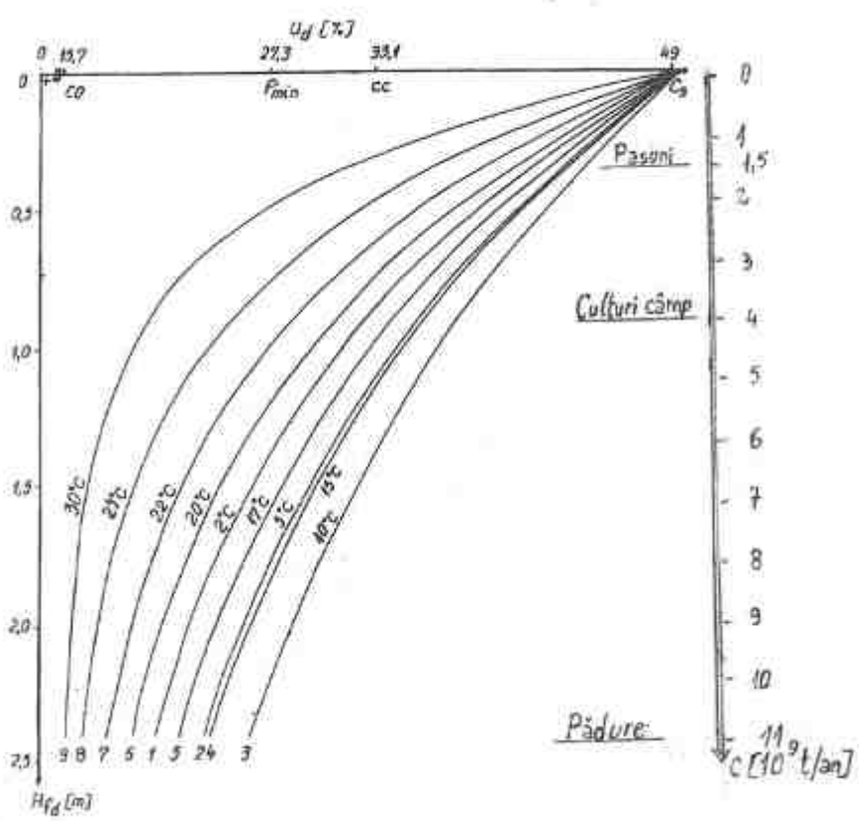

Figura 1 Graficul $U_d = f(H_{fd}, T_d^{calc})$ pentru H=0,50 m (aprilie-iunie)

Fotosinteza reprezintă un proces unic în lumea vie, prin care plantele sintetizează compuºi organici, din dioxidul de carbon ºi apă, în prezenţa luminii ºi a clorofilei. Intensitatea fotosintetică maximă se înregistrează în perioada din an în care radiaţia fotosintetic activă este mai mare ºi în frunzele de pe partea însorită a plantei. Intervalul de variaţie al intensităţii diurne a fotosintezei sunt prezentate în tabelul 1, după Burzoºi colab (2005).

Se menţionează că, un hectar de pădure, filtrează anual aproximativ 18-20 milioane m^3 aer, reţinând circa 80 tone de praf, absorbind 4450 tone CO_2 ºi producând aproximativ 3300 tone de oxigen. Cantitatea menţionată de oxigen, acoperă necesarul pentru 45 persoane, revenind la 222 m^2 pentru o persoană. Un copac stochează 6 kg carbon iar o pădure 6,5 tone per ha. Într-un parc de mărime obiºnuită, de 200 ha, copacii purifică zilnic, 22 kg praf, 4 kg de NO_2, 2,7 kg de SO_2 ºi 0,22 kg de CO (monoxid de carbon).

Tabelul 1

Intensitatea diurnă a fotosintezei

Planta	Intensitatea diurnă fotosinteză	
	[mg CO_2 / dm^2 /h]	[t/ ha /an]
Heliofile	20 - 40	17520 -35040
Orez	27	23652
Pomi fructiferi, arbuºti	11- 35	9636 - 30660
Culturi câmp	12-24	10512 - 21024
Conifere	5-18	4380 - 15768
Viţa de vie	5-9,17	4380 – 8033
Legume	1,61-2,84	1410 - 2488

2. Fiabilitatea sistemelor

2.1.) Fiabilitatea sistemelor de elemente conectate în serie

În acest caz, fiabilitatea sistemului cu elemente în serie (F_s), reprezintă intersecţii (produse) ale fiabilităţii elementelor componente, având forma următoare:

$$F_s = F_1 \cdot F_2 \cdot F_3 \ldots F_n \qquad (7)$$

Dacă fiabilitatea elementelor componente ale sistemului (tronsoane de conducte cu / fără aspersoare) este egală ($F_1 = F_2 \ldots F_n = F_0$), atunci :

$$F_S = F_0^{\,n} \qquad (8)$$

De exemplu, dacă sistemul include două elemente (n = 2) ºi fiecare element are F_0 = 0,9, atunci fiabilitatea va fi F_S = 0,81.

Dacă $?_1 = ?_2 \ldots = ?_0$ ºi n = 2, atunci:

$$\tau_S = \frac{1}{2\lambda_0} = 0{,}5 \quad \frac{1}{\lambda_0} = 0{,}5\tau_0 \qquad (9)$$

De asemenea, relaţia $t_S = 0{,}5 \cdot t_0$ semnifică că, durata de funcţionare fără avarie a sistemului este mai redusă cu 50 % decât a unui element.

2.2.) Fiabilitatea sistemelor de elemente conectate în paralel.

Fiabilitatea reprezintă o reuniune a fiabilităţii elementelor componente sau un produs al defiabilităţilor individuale:

$$F_p = F_1 \; F_2 \; F_3 \ldots U \; F_n \qquad (10)$$

$$F_p = (1 - F_1) \cdot (1 - F_2) \ldots (1 - F_i) \ldots (1 - F_n) \qquad (11)$$

Dacă: $F_1 = F_2 = F_n = F_0$ atunci :

$$1 - F_P = (1 - F_0)^n \text{ sau } F_P = 1 - (1 - F_0)^n \qquad (12)$$

De exemplu, pentru un sistem compus din două elemente (n = 2), rezultă următoarea fiabilitate la conexiunea în paralel:

$$1 - F_p = (1 - F_1)(1 - F_2) = 1 - F_1 - F_2 + F_1F_2 \qquad (13)$$

Dacă cele două elemente au aceiaºi fiabilitate ($F_1 = F_2 = F_0$) , atunci fiabilitatea sistemului ºi durata de funcţionare fără avarie sunt conform relaţiilor următoare:

$$F_p = 2F_0 - F_0^{\,2} \qquad (14)$$

$$\tau_f = \frac{1}{\lambda_1} + \frac{1}{\lambda_2} - \frac{1}{\lambda_1 + \lambda_2} \qquad (15)$$

Dacă riscul individual este acelaºi ($?_1 = ?_2 = ?_0$), atunci durata de funcţionare fără avarie al sistemului este conform relaţiei următoare:

$$\tau_p = \frac{2}{\lambda_0} - \frac{1}{2\lambda_0} = \frac{3}{2}\tau_0 = 1{,}50\tau_0 \qquad (16)$$

Se constată că fiabilitatea în *paralel* mărește cu 50 % durata de funcționare fără avarie a două elemente. Riscul individual (?$_0$) este de 10^{-3} zile iar fiabilitatea individuală (F_0) este 0,90.

2.3.) Elemente specifice tehnicii de udare

S-au analizat două scheme cu instalații de udare neuzate, frecvent folosite în producție, caracterizate prin următoarele elemente: metoda de udare prin aspersiune, cu o conductă de udare pentru fiecare instalație, cu mutare manuală, echipate cu 3 sau 5 aspersoare/instalație, cu echidistanța între aspersoare de 36 m, cu diametrul conductei de udare de 100 mm și distanța între ele de 36 m.

Alimentarea instalațiilor de udare se face de la hidrantul conductei distribuitoare de sector, pozate subteran.

Variantele de schemă de instalații sunt cu conducte de udare poziționate în paralel, echipate în același mod (cu câte 15 aspersoare de același tip / variantă).

Aspersorul are mecanism de rotație cu șoc mecanic, este prevăzut cu ajutaj cu Ø 18 mm, distribuie debitul de 5,5 dm^3/s la presiunea de 3 bar și are raza de acțiune de 36 m. Au fost analizate două variante (A și B), după cum urmează:

-*varianta A*: 5 instalații, cu 3 aspersoare / instalație și lungimea de 108 m / instalație, având suprafața udată pe poziție de 0,39 ha;

-*varianta B*: 3 instalații, cu 5 aspersoare / instalație și lungimea de 180 m / instalație, având suprafața udată pe o poziție de 0,65 ha.

Elementele de udare (aspersoarele și tronsoanele de conducte) sunt legate în serie.

2.4. Rezultate obținute privind fiabilitatea

Defiabilitatea sistemului compus din instalații conectate în paralel, în cele două variante este:

Varianta A

$$D_A = D_1 \cdot D_2 \cdot D_3 \cdot D_4 \cdot D_5$$

$$1 - F_A = \left(1 - F_0^3\right)^5$$

sau $F_A = 5 \cdot F_0^3 - 10\, F_0^6 + 10\, F_0^9\ \ 5\, F_0^{12} + F_0^{15}$

Rezultă: ?$_{A=}$ 752 zile ≅ 2 ani

Varianta B

$$D_B = D_A\ D_C\ D_D$$

$$1 - F_B = \left(1 - F_0^5\right)^3$$

$$F_B = 3\, F_0^5 - 3\, F_0^{10} + F_0^{15}$$

$$\tau_B = \frac{3}{5\lambda} - \frac{3}{10\lambda} + \frac{1}{15\lambda}$$

Rezultă: $\tau_B = \frac{11}{30} \cdot 1000$ = 365 zile = 1 an

A mai rezultat că, legăturile în serie sunt mai defavorabile decât cele în paralel.

CONCLUZII

- Dimensionarea rețelei de regularizare cu dublă funcțiune se face pentru situația de valorificarea maximă a apei freatice în interiorul parcelei.
- Exploatarea amenajării de subirigație se face în funcție de trei intervale principale de variație ale nivelului freatic pentru realizarea funcției de drenaj-evacuare, a celei de subirigație și a reținerii optime a apei în parcelă.
- Intervalul de variație al intensității diurne a fotosintezei în funcție de planta de cultură, se prezintă în tab. 1.
- Modul de valorificare al terenului propus se face prin alegerea plantei în funcție de poziția optimă a nivelului freatic și de cantitatea de CO_2 fixată.
- Din punct de vedere al fiabilității grupului de echipamente de udare prin aspersiune, se recomandă varianta A (5 instalații, 3 aspersoare pe instalație, lungimea instalației de 108 m), care are lungimea instalației mai mică cu 50 % decât în varianta B (3 instalații, 5 aspersoare, lungimea instalației de 180 m).
- Instalația de udare se recomandă să aibă lungimea determinată printr-un calcul tehnico-economic, luându-se în considerare pe lângă fiabilitatea și a elementelor specifice calității udării la aspersiune.
- Schemele de udare cu conexiuni paralele sunt mai favorabile decât cele în serie.

BIBLIOGRAFIE

[1] **Burzo I., Dejeu L., Şerbănescu A., Bădulescu L., 2005 - Fiziologia plantelor de cultură**, vol. III, **Fiziologia viţei de vie**, **editura ELISAVAROS, ISBN: 973 - 99369 - 6-2, Bucureşti, p. 87**

[2] Burzo I., Delian E., Hoza D., 2005 - **Fiziologia plantelor de cultură**, vol. IV, **Fiziologia pomilor arbuşti şi lantelor ierboase fructifere**, editura ELISAVAROS, IS**BN: 973 - 99982 - 7-6, Bucureşti**

[3] Burzo I., Dobrescu A., 2005 - *Fiziologia plantelor* , vol. VII, **Fiziologia arbuştlori şi plantelor lemnoase spontane, editura ELISAVAROS, ISBN: 973 - 8400 - 10-4, Bucureşti**

[4] Burzo I., Dobrescu A., 2005 - *Fiziologia p***lantelor de cultură**, vol.II, *Fiziologia culturilor de câmp***, editura ELISAVAROS, ISBN: 973 - 8400 - 08-2, Bucureşti**

[5] Burzo I., Voican V., Luchian V., 2005 - **Fiziologia plantelor de cultură**, vol. V., *Fiziologia plantelor legumicole*, editura ELISAVAROS, I**SBN: 973 - 99369- 9-7, Bucureşti**

[6] **Milica C. I., Bărbat I., Dorobanţu N., Nedelcu P., Baia V., 1997 Fiziologia vegetală, Editura didactică şi pedagogică, Bucureşti, p.154 - 155**

[7] Nicolescu C., Adam M., Grosu M, 1994 - **Model matematic şi program de calcul pentru studiul poziţiei optime a nivelului freatic în scopul folosirii bivalente a reţelei de drenaj, în: Analele ICITID, vol. VIII (XIX), Bucureşti**

[8] Nicolescu C., Condruz R., Ioanovici N-E.,- „**Amenajările de irigaţiefactor esenţial pentru realizarea agriculturii durabile (studiu de caz pentru judeţul Giurgiu)",:Buletinul AGIR, nr.3, editat AGIR, ISSN 1224-7928, Bucureşti, 2000.**

[9] Nicolescu C., Popescu T.C.,- „**Aspecte privind echiparea cu instalaţii de udare în sistemele mari de irigaţie**", în „Lucrări **ştiinţifice ", seria Agronomie, vol 48, ISSN 1459-7414, Simpozionul cu participare internaţională „Agricultura şi mediul prezent şi perspective", editat cu sprijinul Ministerului Educaţiei şi Cercetării, Editura Ion Ionescu de la Brad Iaşi, CD, 2005**.

[10] Nicolescu C., - „*Considerations concerning the rational use of irrigation water*"**, în „Lucrări ştiinţifice ", Agronomie, vol 48, ISSN 1459-7414, Simpozionul cu participare internaţională „Agricultura şi mediul-prezent şi perspective", Editat cu sprijinul Ministerului Educaţiei şi Cercetării, Editura Ion Ionescu de La Brad Iaşi, CD, 2005.**

MODELAREA CURGERII GAZELOR REZULTATE ÎN URMA COMBUSTIEI ÎNCARCATURII DE AZVÂRLIRE ÎN SISTEMELE DE ARMAMENT CU ȚEAVĂ

MODELLING THE GAS FLOW GENERATED AT COMBUSTION OF THE THROWING LOAD OF THE BARRELLED GUNS SYSTEMS

Gl. Bg(r) prof.univ.dr.ing Tudor CHERECHEª **
Col. drd. ing. Tiberiu HOMUTESCU *
Lector univ. dr.ing. Adrian ROTARIU **
Lt. asist. univ. drd. ing. Alin-Constantin SAVA **
*SPP, Academia Tehnică Militară, MNA PRODCOM**

Abstract

The calculation of the gas flow value during the displacement of the missile in the barrell represents a complex problem because the phenomenon has a non isothermal and turbulent character leading to changes of the permanent operational environment. In the present paper will be studied the motion of a 76 mmm caliber missile in the gun barrell, finding the specific of the powder gas generated as an effect of the combustion and also the variation of the missile speed depending on time. In the approached model the flow will be considered axial symmetrical, in motion, non isothermal, compressible and turbulent. For simulating and calculating the flow the model has been implemented in a commercial calculum software with finite volumes, named FLUENT.

Introducere

Sistemele de armament cu țeavă sunt sisteme termodinamice complexe ce au drept scop lansarea unor tipuri de muniții: proiectile, rachete etc cu viteze controlate și abateri minime față de o traiectorie teoretică calculată, astfel încât acestea să producă efectele dorite (distrugeri, neutralizări incapacitări etc) asupra unei ținte date aflată la o distanță cunoscută. Acest scop trebuie să fie atins păstrând siguranța totală a personalului și echipamentelor aflate în vecinătatea sistemului de armament și necesită o cunoaștere cât mai bună a fenomenelor gazodinamice care se desfășoară în țeavă, din momentul inițierii pulberii până la părăsirea gurii de foc de către proiectil.

Mișcarea proiectilului în țeava gurii de foc este produsă de către combustia unei încărcături de pulbere dispusă în camera de încărcare. Inițierea pulberii implică utilizarea unor dispozitive mecanice, dispozitive electrice sau altor tipuri, proiectate astfel încât să asigure o inițiere completă și eficientă, deoarece o inițiere parțială poate duce la fluctuații nedorite ale presiunii gazelor generate și implicit la viteze de azvârlire necorespunzătoare sau chiar la rateuri de tragere. Odată produsă inițierea, se stabilește combustia autosusținută, caracterizată de către transformarea rapidă a pulberii în gaze sau amestec de particule gaz-solid cu evoluția simultană a presiunii și căldurii. Creșterea presiunii face ca proiectilul să se deplaseze accelerat în țeavă. Începutul mișcării depinde de forța de desertizare (pentru proiectilele sertizate) și de forța de angajare în ghinturi (cand se trage cu o țeavă gnintuită). Pe măsură ce proiectilul se deplasează în țeavă, volumul liber din spatele acestuia este umplut cu un amestec de gaz-solid (pulbere). Parametrii curgerii din țeavă determină parametrii curgerii la gura țevii de foc, astfel condițiile balisticii interioare fiind de o importanță deosebită în aprecierea fenomenelor ce au loc ulterior. Deoarece combustia în sistemele de armament nu implică aport exterior de carburant sau oxigen, pulberile de azvârlire trebuie să conțină în structura lor ambele elemente.

Combustibilii utilizaþi în sistemele clasice de armament cu þeavã sunt în stare solidã º i sunt produº i în bucãþi cu o geometrie bine definitã, cum ar fi, de exemplu, sfere, cilindrii, elemente tubulare etc. Debitul masic pe timpul combustiei º i, implicit curba presiunii în funcþie de timp depind de viteza de ardere º i de aria suprafeþei totale instantanee.

1. Aspecțe ăle fenomenelor găzodinămice în sișțemele de ărmămenț cu țeăvă

Curegerea gazelor în þeavã în balistica interioarã este un fenomen destul de complex care include turbulenþe, arderea de gaz-particule sau gaz-fragmente de pulbere, unde de presiune etc. De exemplu figura 1 prezintã anumite etape ale curgerii gazelor în þeavã. Figura 1a prezintã camera de încãrcare cu sistemul de iniþiere montat în partea de dinapoi º i proiectilul dispus în tubul cartuº având $v_p = 0$.

Sistemul de initiere produce gaze fierbinti la o presiune ridicata care împreuna cu particulele solide incandescente sunt propulsate spre încarcatura de pulbere de azvârlire producând initierea acesteia.

Odatã iniþierea având loc, variaþia fluxului de masã a gazelor º i presiunea localã, împreunã cu permeabilitatea macroscopicã a încãrcãturii de pulbere, determinã procesul iniþial de combustie în camera de încãrcare. Densitatea de încãrcare, tipul pulberii º i forma acesteia, modul de dispunere a pulberii în tubul cartuº joacã un rol important în combustia încãrcãturii de azvârlire.

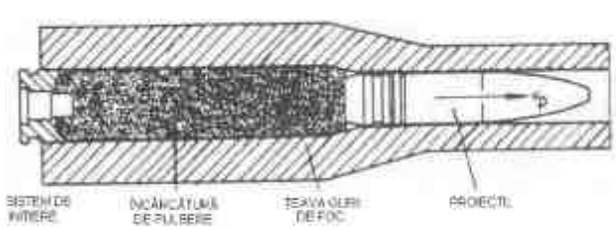

a. înainte de iniþierea pulberii de azvârlire

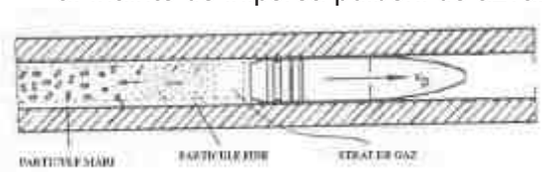

b. pe timpul combustiei pulberii º i deplasãrii proiectilului în þeavã

Figura 1 Reprezentarea schematicã a curgerii gazelor în sistemele de armament cu þeavã

În figura 1b se prezintã curgerea în þeavã la un moment ulterior iniþierii pulberii, când $v_p \neq 0$. Se poate observa schematic amestecul fazelor si modul de evoluþie a combustiei.

2. Descriereă modelului propus

Deplasarea unui proiectil în þeavã se calculeazã conform ecuaþiilor balisticii interioare formulate în cazul unei guri de foc ghintuite, proiectilul având în þeavã o miº care de rototranslaþie. În studiul de faþã vom considera proiectilul un solid rigid ce prezintã numai miº care de translaþie în lungul axei de simetrie a þevii. Modelul propus asimileazã în miº carea de translaþie º i energia consumatã pentru rotaþia acestuia. În scopul simulãrii cât mai precise a fenomenului tragerii se va considera cã proiectilul este propulsat de cãtre un gaz compresibil generat în funcþie de timp, similar ca variaþie în timp cu gazele de pulbere ce iau naºtere pe timpul tragerii ale cãror caracteristici au fost determinate prin trageri în bomba balisticã. În funcþie de presiunea gazelor exercitatã asupra proiectilului, acesta îºi începe miº carea de translaþie în þeavã, viteza variind în funcþie de presiunea calculatã pe partea posterioarã a acestuia. Având în vedere faptul cã rezolvare acestei probleme presupune un volum extrem de mare de calcule simularea s-a realizat în 2D, pe un model axial simetric.

Figura 2 prezintã modelul fizic realizat utilizând software-ul de preprocesare GAMBIT. Dimensiunile þevii º i proiectilului respectã valorile sistemului de armament calibru 76 mm.

Pentru rezolvarea problemei propuse s-a folosit pentru întreg domeniul de analiza o mesa triunghiulara, diferentiata în functie de importanta zonei si de amplitudinea fenomenelor produse. Astfel pentru zona camerei de încarcare, unde are loc initierea si combustia pulberii, deplasarea elementelor de pulbere si a proiectilului, presiuni având valori de peste 2000 bari s-a preferat o mesa foarte fina (0.8 mm), dar fara a mari în mod nejustificat timpul de rezolvare a problemei. Pentru zona din fata a proiectilului s-a folosit o mesa având o dimensiune de 4 mm.

Figura 2 - Model fizic simulat

În figura 3 este prezentat un detaliu al camerei de încarcare în care poate observa dispunerea sistemului de initiere (a) si elementele de pulbere (b).

Elementele de pulbere care se pot observa în figurã sunt elemente echivalente alese astfel încât masa totalã a pulberii sã fie respectatã.

Legea de combustie a pulberii, temperatura de combustie, modelul deplasãrii elementelor de pulbere în ţeavã, modelul deplasãrii proiectilului precum º i proprietãtile gazului utilizat sunt introduse folosind fiº iere UDF (user define function).

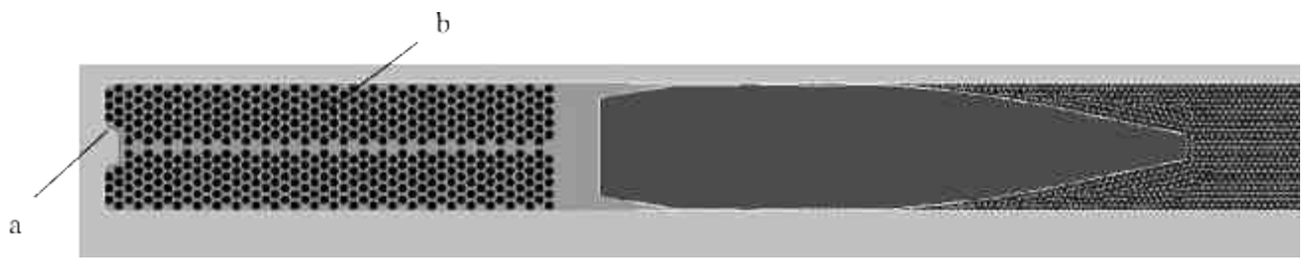

Figura 3 Detaliu în zona camerei de încărcare

3. Ecuațiile ce guvernează fenomenul

Problema ce urmeaza a fi rezolvata consta într-o curgere compresibila, turbulenta si axial simetrica. Ecuatia continuitatii este data de:

$$\frac{\partial \rho}{\partial t} + \nabla \cdot \left(\rho \vec{v} \right) = S_m \qquad (1)$$

unde:

S_m – masa adăugată fazei continue de către faza dispersată

Pentru modelul în cauză 2D axial simetric, ecuația continuității se scrie astfel:

$$\frac{\partial \rho}{\partial t} + \frac{\partial}{\partial x}\left(\rho v_x\right) + \frac{\partial}{\partial r}\left(\rho v_r\right) + \frac{\rho v_r}{r} = 0$$

unde:

x – coordonata axială;

r – coordonata radială;

v_x – viteza axială;

v_r – viteza radială.

Ecuația de conservare a momentului este dată de:

$$\frac{\partial}{\partial t}\left(\rho \vec{v}\right) + \nabla \cdot \left(\rho \vec{v}\vec{v}\right) = -\nabla p + \nabla \cdot \left(\bar{\bar{\tau}}\right) + \rho \vec{g} + \vec{F} \qquad (2)$$

unde:

p – presiunea statică;

$\bar{\bar{\tau}}$ - tensorul tensiunilor;

$\rho \vec{g}$ - forța gravitațională;

$\vec{F}$ - forțele exterioară;

$$\bar{\bar{\tau}} = \mu\left[\left(\nabla \vec{v} + \nabla \vec{v}^{T}\right) - \frac{2}{3}\nabla \cdot \vec{v}\, I\right] \qquad (3)$$

unde:

μ – vâscozitatea moleculară;
I – tensorul unitate;

Pentru modelul prezentat 2D axial simetric, ecuațiile de conservare a momentului radial și axial se scriu astfel:

$$\frac{\partial}{\partial t}(\rho v_x) + \frac{1}{r}\frac{\partial}{\partial x}(r\rho v_x v_x) + \frac{1}{r}\frac{\partial}{\partial r}(r\rho v_r v_x) =$$
$$-\frac{\partial p}{\partial x} + \frac{1}{r}\frac{\partial}{\partial x}\left[r\mu\left(2\frac{\partial v_x}{\partial x} - \frac{2}{3}\left(\nabla \cdot \vec{v}\right)\right)\right] + \qquad (4)$$
$$+\frac{1}{r}\frac{\partial}{\partial r}\left[r\mu\left(\frac{\partial v_x}{\partial r} + \frac{\partial v_r}{\partial x}\right)\right] + F_x$$

și

$$\frac{\partial}{\partial t}(\rho v_r) + \frac{1}{r}\frac{\partial}{\partial x}(r\rho v_x v_r) + \frac{1}{r}\frac{\partial}{\partial r}(r\rho v_r v_r) =$$
$$-\frac{\partial p}{\partial r} + \frac{1}{r}\frac{\partial}{\partial r}\left[r\mu\left(\frac{\partial v_r}{\partial x} + \frac{\partial v_x}{\partial r}\right)\right] +$$
$$\frac{1}{r}\frac{\partial}{\partial r}\left[r\mu\left(2\frac{\partial v_r}{\partial r} - \frac{2}{3}\left(\nabla \cdot \vec{v}\right)\right)\right] - \qquad (5)$$
$$2\mu\frac{v_r}{r^2} + \frac{2}{3}\frac{\mu}{r}\left(\nabla \cdot \vec{v}\right) + \rho\frac{v_z^2}{r} + F_r$$

unde:

$$\nabla \cdot \vec{v} = \frac{\partial v_x}{\partial x} + \frac{\partial v_r}{\partial r} + \frac{v_r}{r} \qquad (6)$$

În FLUENT, transportul turbulent de căldură este modelat folosind conceptul analogiei Reynold's cu transferul momentului turbulent. Modelul ecuației energiei „modelate" este astfel dată de:

$$\frac{\partial}{\partial t}(\rho E) + \frac{\partial}{\partial x}\left[v_x(\rho E + p)\right] +$$
$$\frac{1}{r}\frac{\partial}{\partial r}\left[r v_r(\rho E + p)\right] =$$
$$\frac{\partial}{\partial x}\left[\left(k + \frac{c_p \mu_t}{\Pr_t}\right)\frac{\partial T}{\partial x} + u(\tau_{ij})_{eff}\right] + \qquad (7)$$
$$+\frac{1}{r}\frac{\partial}{\partial x}\left[r\left(k + \frac{c_p \mu_t}{\Pr_t}\right)\frac{\partial T}{\partial x} + r u(\tau_{ij})_{eff}\right]$$

unde

E – energia totală;
$(\tau_{ij})_{eff}$ - încălzirea vâscoasă;
$\Pr_t$ - numărul lui Prandtl, egal cu 0,85;

Ecuația de stare:

$$p = \frac{\rho}{M^2\gamma}\left[E - M^2\gamma(\gamma - 1)\left(k + \frac{v_x^2 + v_r^2}{2}\right)\right] \qquad (8)$$

Energia cinetică turbulentă k și variația sa de disipare, ε se obțin din următoarele ecuații de transport:

$$\frac{\partial}{\partial t}(\rho k) + \frac{\partial}{\partial x_i}(\rho k u_i) = \frac{\partial}{\partial x_j}\left[\left(\mu + \frac{\mu_t}{\sigma_k}\right)\frac{\partial k}{\partial x_j}\right] \qquad (9)$$
$$+ G_k + G_b - \rho\varepsilon - Y_M + S_k$$

și

$$\frac{\partial}{\partial t}(\rho \varepsilon) + \frac{\partial}{\partial x_i}(\rho \varepsilon u_i) = \frac{\partial}{\partial x_j}\left[\left(\mu + \frac{\mu_t}{\sigma_\varepsilon}\right)\right] \qquad (10)$$
$$+ C_{1\varepsilon}\frac{\varepsilon}{k}(G_k + C_{3\varepsilon}G_b) - C_{2\varepsilon}\rho\frac{\varepsilon^2}{k} + S_\varepsilon$$

Vâscozitatea turbulentă, μ_T se calculează astfel:

$$\mu_t = \rho C_\mu \frac{k^2}{\varepsilon} \qquad (11)$$

Constantele modelului $C_{1\varepsilon}$, $C_{2\varepsilon}$, C_μ, σ_k și σ_ε au următoarele valori:

$$C_{1\varepsilon} = 1{,}44$$
$$C_{2\varepsilon} = 1{,}92$$
$$C_{\mu} = 0.09 \qquad (12)$$
$$\sigma_k = 1$$
$$\sigma_\varepsilon = 1{,}3$$

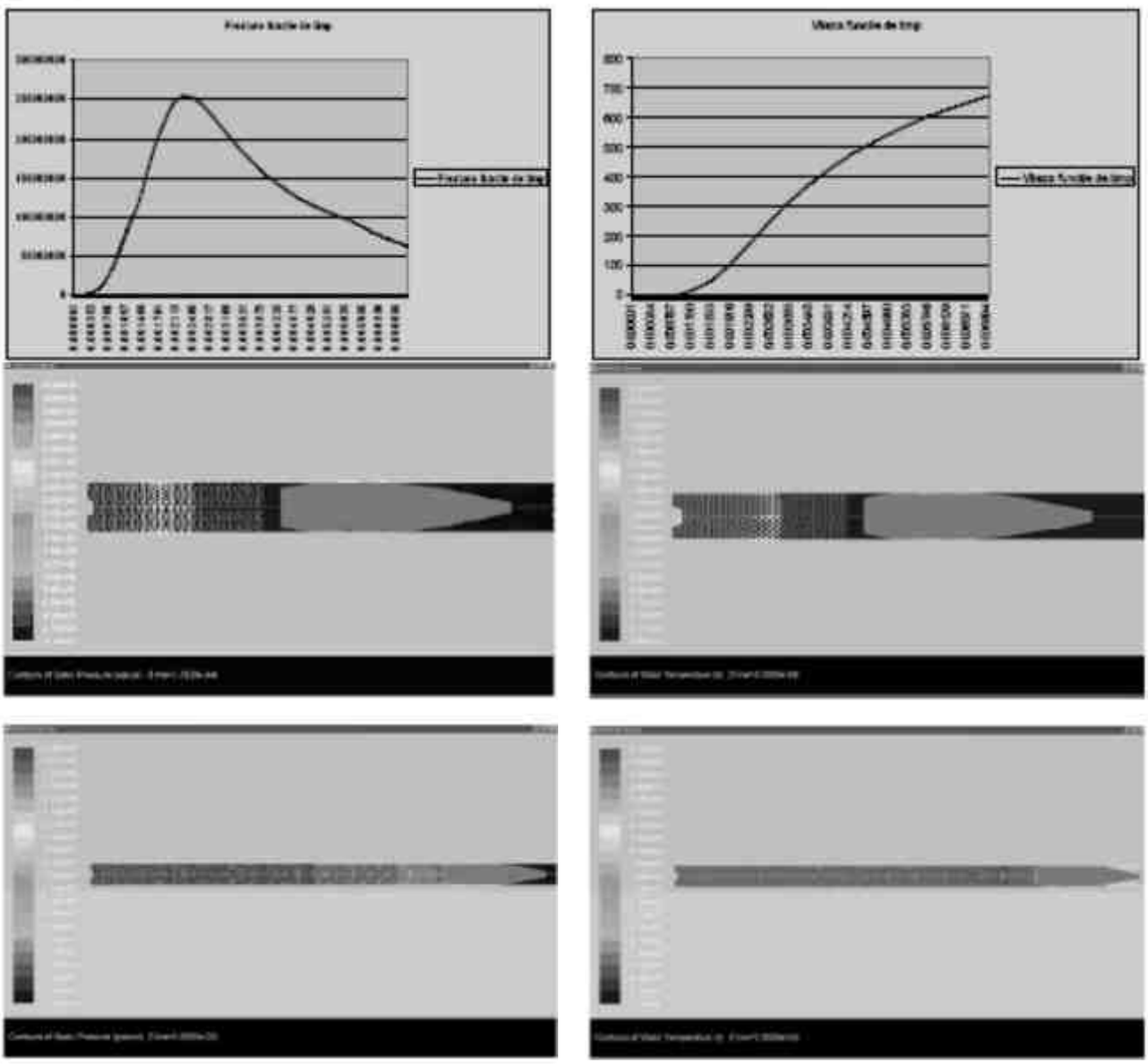

Figura 4 Rezultatele obinute prin simulare numericã

5. Concluzii

Un model de evaluare numericã a fenomenului tragerii cu un sistem de armament calibru 76 mm a fost implementat utilizând un software comercial de calcul cu volume finite, FLUENT.

Totodatã modelul propus contribuie la rezolvarea problemei directe a balisticii interioare determinându-se caracteristicile gazului de pulbere generat prin combustie precum i variaia presiunii gazelor i vitezei proiectilului în funcie de timp.

Coeficienții utilizați au fost obținuți prin trageri experimentale în bomba balisticã sau evaluați prin prisma experienței coautorilor în domeniu.

Lucrarea de față deschide calea spre noi studii privind balistica intermediarã a gurilor de foc și evaluarea undelor de șoc generate pe timpul tragerilor cu sistemele de armament cu țeavã.

Bibliografie

1. POWELL, E. G., Wilmot, G., HAAR, L., KLEIN, M. (1979). *Equations of State and Thermodynamic for Interior Ballistics Calculations*, Progress in Astronautics and Aeronautics, **139,** (Interior Ballistics of Guns) AIAA, New York
2. FLUENT, I. (September 2006). *Fluent 6.3 User's Guide*
3. K. Jamsa dr., L. K. (2003). *C si C++ Manualul Fundamental de programare in C si C++*, Bucuresti, Editura Teora, 973-601-911-X

THERMAL INSTALLATIONS FOR PRODUCING OF DHW USING SOLAR PANELS, FOR SINGLE-FAMILY DWELLINGS - SOLUTIONS AND EXPERIMENTAL RESULTS

INSTALATII TERMICE PENTRU PRODUCEREA DE ACM CARE UTILIZEAZA PANOURI SOLARE, DESTINATE LOCUINTELOR UNI-FAMILIALE - SOLUTII SI REZULTATE EXPERIMENTALE

Ph.d eng Adrian MIREA – SC ROMFLUID SA Bucharest
Eng. Catalin Dumitrescu – INOE 2000 – IHP Bucharest
Eng. Florin GEORGESCU – INOE 2000 – IHP Bucharest

Abstract:

Renewable energy is derived from natural processes that are replenished constantly. In its various forms, it derives directly from the sun, or from heat generated deep within the earth. Included in the definition is electricity and heat generated from solar, wind, ocean, hydropower, biomass, geothermal resources, and biofuels and hydrogen derived from renewable resources.
While most renewable energy projects and production is large-scale, renewable technologies are also suited in private household. In our country, the use of renewable energy is in an incipient stage, with a small amount of energy produced from solar radiation, although of geographically benefit from favorable conditions.

That's why it is considered that there are very good conditions in the country for production and marketing systems for electricity and heat production using solar radiation. The company SC ROMFLUID SA Bucharest is one of those who wish to develop systems to produce heat using flat solar panels, made by an own solution. At the end of a research work, the company has established a technical solution for the production of DHW for a family of 3…4 persons. Starting from this basis, can develop applications for a greater number of people using thermal energy for heating or combining them with other heat sources, conventional or based on other types of renewables.

1. Introduction

The "solar energy" refers to energy that is collected from sunlight. Solar energy can be applied in many ways, including to:

- generate electricity using photovoltaic solar cells.
- generate electricity using concentrating solar power.
- generate electricity by heating trapped air which rotates turbines in a Solar updraft tower.
- generate hydrogen using photoelectrochemical cells.
- heat water or air for domestic hot water and space heating needs using solar-thermal panels.
- heat buildings, directly, through passive solar building design.
- heat foodstuffs, through solar ovens.
- solar air conditioning

From the end of 2004 to the end of 2008, solar photovoltaic (PV) capacity increased sixfold to more than 16 gigawatts (GW), wind power capacity increased 250 percent to 121 GW, and total power capacity from new renewables increased 75 percent to 280 GW. During the same period, solar heating capacity doubled to 145 gigawatts-thermal (GWth), while biodiesel production increased sixfold to 12 billion liters per year and ethanol production doubled to 67 billion liters per year. Amounts of energy from renewable sources by category and the share of energy from these sources in total energy produced, are shown in figure 1

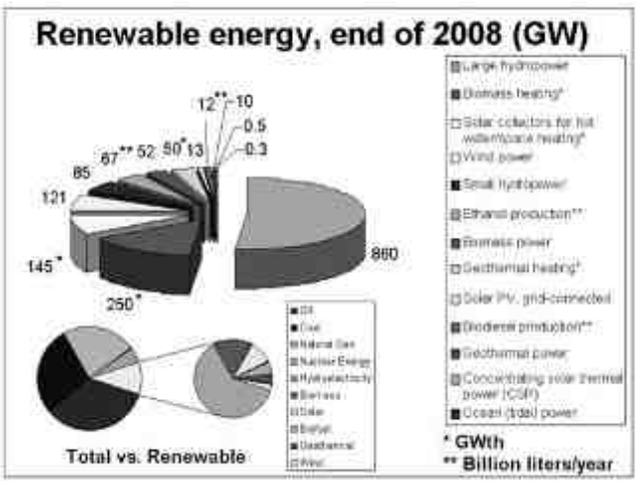

Figure 1 - Renewable energy and total energy, at end of 2008

For producing thermal energy from solar radiation are necessary the use of solar thermal collectors. The water heated in this way can be used as domestic hot water but also as a means of heating residences, reducing the consumption of common fuels.

Romania benefits by excellent geographical conditions in order to collect solar radiation, having a level of solar radiation for most of the country regions which rises above 1250…1350 kWh/m^2/year, in some areas from its south reaching 1450…1600 kWh/m^2/year; by comparison, Germany, which had at the end of 2008 over 10 millions m^2 where solar collecting panels were mounted, with power output amounted to some 7300 megawatts, has an annual average quota of solar radiation from 876 to 1250 kWh/m^2/year. Some other values in European cities are: Liege – 840, Hamburg – 870, Munich– 950, Madrid – 1400, Seville – 1470 kWh/m^2/year.

Taking these reasons into account, the company SC ROMFLUID SA Bucharest started to produce solar thermal installations based on plane collecting panels developed according to its own constructive solutions that can be used to produce domestic hot water (DHW) and also can be used in combination with classic home heating systems; the basis of putting these systems into manufacturing was represented by the results of scientific research carried out during 2007-2009, while developing a project within the framework of INOVARE Programme.

2. Instalations for obtaining solar thermal energy

Objectives of this paper consist in presenting possible schematic diagrams to be applied in solar thermal installations, as well as results achieved during testing stage. Installation under tests is based on 2 thermal solar panels, wherein a special fluid is heated; this one conveys heat to cold water by means of a serpentine pipe in a monovalent solar boiler. This installation was designed to meet the requirements for DHW of a 3 - 4 person family.

The first type of instalation is designed only for obtain domestic hot water, 100% in the warm season, and partial in the warm season.

The installation for heating water ACM with the hydraulic scheme presented in figure 2 makes the fluid from the solar panel flow to a serpentine placed inside the special solar boiler (5) for solar installations. The fluid which flows through the serpentine of the boiler generates the heat received from the solar panel to the cold water from the boiler heating it. The flow is realized by means of a pump type WILO ST purposefully designed for solar installations. The actuation of the pump is performed by means of a controller (3) type Deltasol AX which compares the temperature values supplied by the two temperature sensors, one placed in the hottest point of the installation at the upper edge of the solar panel, respectively in the coldest point - on the bottom of the solar boiler (6). The controller activates the pump as long as between the 2 points there is a difference of temperature higher than 2....16 K adjustable, at the lowering of this difference below the fixed threshold, the pump is set off and the thermal transfer stops.

This kind of controller is the simplest one from the 3 integrated in the schemes having 2 inputs of temperature sensors and has a small price.

For all variants, the fluid consists of a mixture of water/propylene glycol in a proportion of 60/40 or 45/55 depending on the minimum environmental temperature during the cold seasons, the mixture 45/55 being active up to – 26 C.

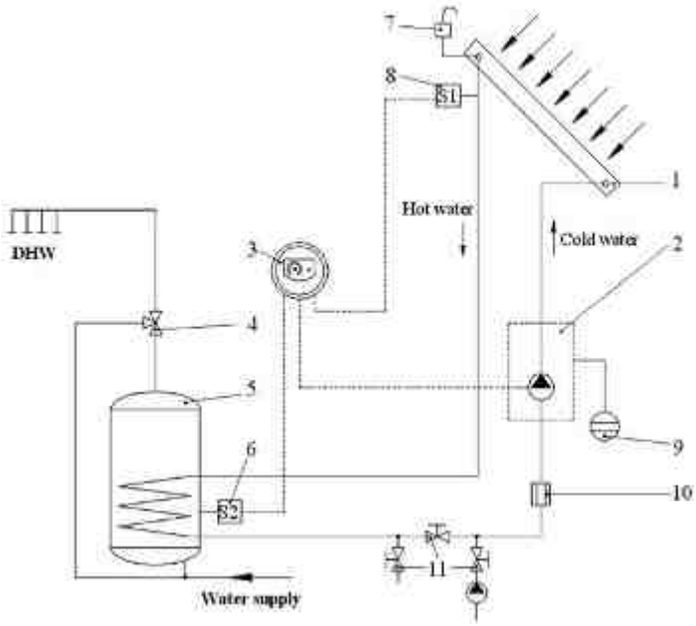

Figure 2 - Installation for producing domestic hot water

The flow pump is integrated in a solar installation 2) which includes hydraulic components necessary for the system to work efficiently – direction valve on return, manometer, safety valve, installation filling and washing taps, flowmeter (which measures the amount of energy produced) On the solar panel can be fixed the controller too. For this kind of solar station just the return (the direction from the boiler serpentine to the panel) passes through the station.

The installation also includes a mixing valve 4) which limitates the DHW temperature, an automatic air vent 7), a vessel of expansion specific for the solar installations 9), a filter 10) and filling and emptying taps 11).

The second variant figure 3 represents a solar installation integrated to a system which provides hot house water all the year round, the thermal energy supplied by the solar panel being supplemented during the periods when it is not enough with additional thermal energy for heating the water from the boiler from a classic heating system (central heating, boiler with gas or solid fuel etc.). In this case it is used a boiler with 2 serpentines through the second passing the water heated in the thermal power system the 2 temperatures are compared by means of 2 sensors placed in the 2 points the sensor 12) on the thermal system and the sensor 15) on the solar boiler and another sensor 8) placed on the solar panel. The data from the 3 sensors are compared two by two by a solar controller type DeltaSol BS with 3 inputs of sensors which can control more output devices. In this case in the circuit is integrated a second pump 14) similar with the first, which provides the flow between the thermal system and boiler. The pumps work like in the previous case as long as between the 2 points there is an adjustable temperature difference of 2.....16K.

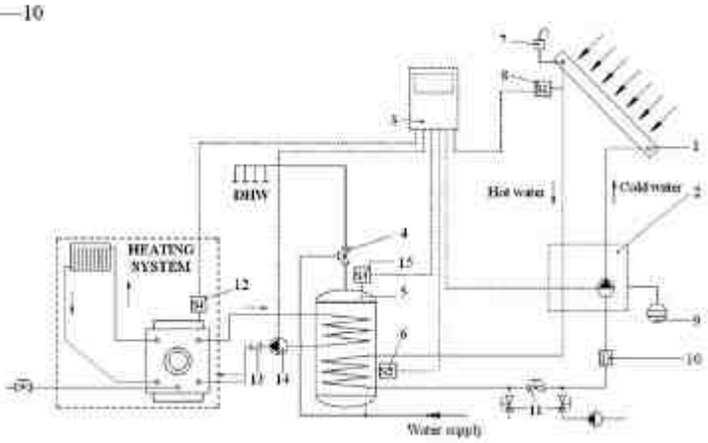

Figure 3 - Installation for producing domestic hot water all the year round

The solar station includes additionally to the previous variant 2 thermometers placed on the 2 directions turn, return which are both passing through the solar station in this case.

The third variant figure 4 allows in addition to the previous, the water heating from the return of a classic home central heating installation, reducing in this way the role of the thermal heating system and implicitly of the fuel consumption for this purpose are added 2 temperature sensors S3 and S5 on the hydraulic scheme which compare the water temperatures from the upper side of the boiler with 2 serpentines with the one from the return of the heating installation. If the temperature of the water from the boiler is higher, a motorized valve with 3 inputs 15) allows the input of this water in the return circuit of the heating installation, reducing the amount of energy needed. The temperature controller 3) is type ES allowing the connection of the 5 sensors and the control on 3 outputs.

All the components of the installations are purposefully designed for solar systems.

For respecting the normatives regarding the maximum temperature of the water supplied for avoiding the risk of an overheated water over 60^0 C it was mounted an automatic mixing valve in all the schemes 4); this allows mixing hot water from the boiler with cold water.

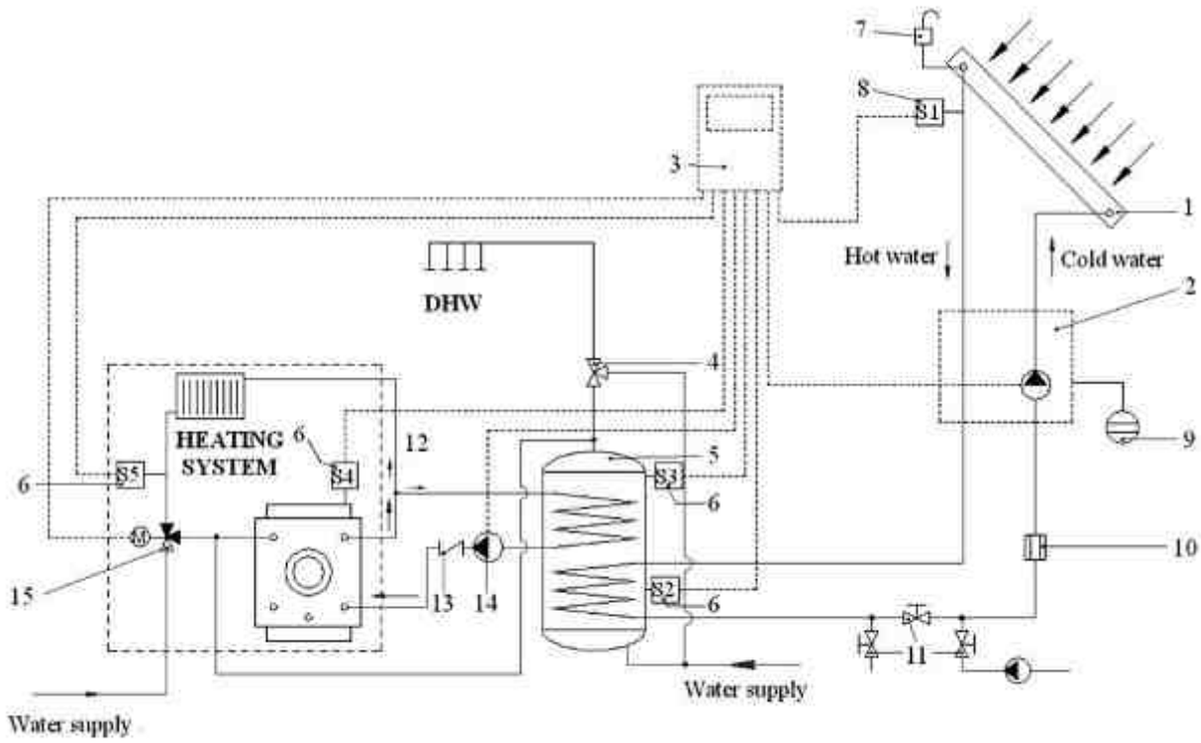

Figure 4 - Installation for producing domestic hot water and heating

3. The realised installation

The first scheme was materialiazed into an installation for producing DHW. The installation was connected to the cold water supply network, at the entry in the solar boiler and at its exit was linked to the existent consumers, initially supplied with hot water by an electric boiler as it is shown in figure5.

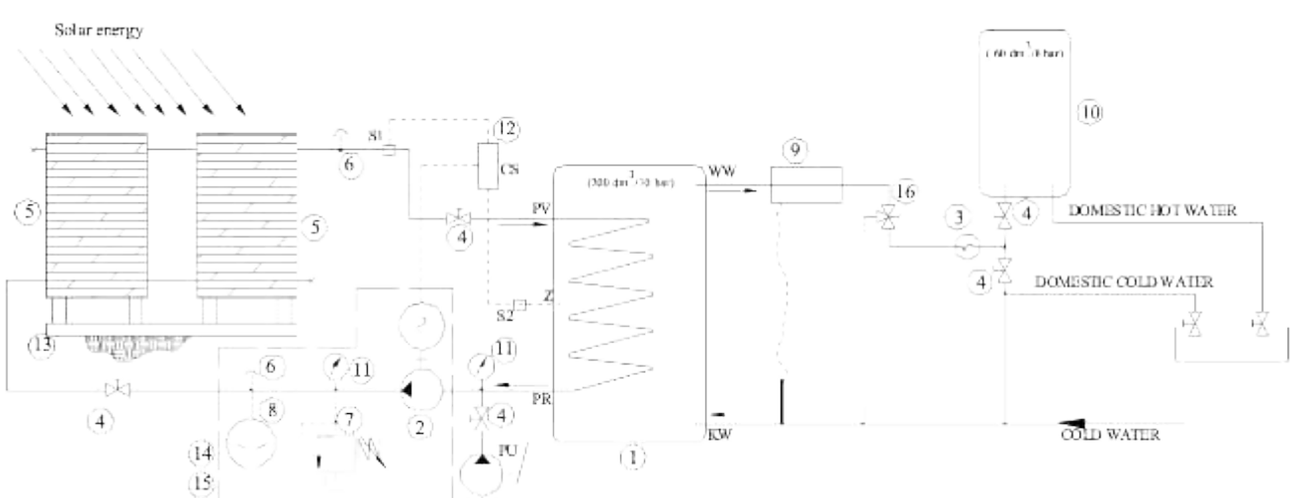

Figure 5 – Diagrame for connection of the solar instalation with the classic source for DHW producing

The solar circuit includes the 2 panels 5) grouped in series, the solar boiler **1)** with plain curve, the pumping unit which includes the pump **2)** the manometer **11)** for displaying the operational pressure, the pressure valve **7)** and the expansion tank **8).** Beside these there are also isolation taps, mounted on tour and return.

The electropump **2)** is controlled by the solar controller **12)** which is constantly making a difference of temperature between the sensor S1 mounted at the exit from the group of solar panels and the sensor S2 mounted on the solar boiler. When this difference exceeds a fixed threshold, ranging between 2...16 K is prompted the supply of the electropump.

As it may be seen from fig. 5 the hot water generated by the installation DHW goes out on top of the solar boiler under the pressure of the cold water from the common supply network, it is mixed with cold water from the network for impeding overheated water to flow on taps and goes into a classic electric boiler, as cold water which must be reheated. If the temperature of the water coming from the solar boiler is higher than the one of the electric boiler, this does not start. If the temparature is lower the water heating is made reaching a range of temperatures equal with the difference betwen the desired one and that obtained in the solar boiler.

In both cases it is reached a good saving of electric energy, depending on the temperature obtained in the solar boiler and the needs.

4. Results

In order to test performances of this installation, we measured thermal energy quantity resulted, by means of an energy meter – position 9), figure 5; simultaneously we measured input and output temperatures of solar fluid, input and output temperatures of water inside this installation, as well as temperature decrease inside the solar boiler over a 48 hour period, with no energy supply from the panels and without any DHW compsumption.

Figure 6 shows the energy meter tip Kampstrup 401, which allows the measurement of temperature (input – output), flow, total produced energy, etc; in figure 7 is presented the solar boiler.

Figure 6 – The energy meter

Figure 7 - The solar boiler

For measuring the quantity of energy it was produced a consumption cycle consisting of 10 sections of 20 l each with a 200 l overall, during a 10 hours interval between 8 am and 6 pm starting from a temperature of 55°C. After the 200 l were consumed it was continued the consumption until the drop of temperature till 55°C, measuring the overall amount of hot water used. The temperature of the heated water was measured at the mixing tap fixed on 55°C. The results are shown in the graphic from figure 8.

The test was performed in May 2009.

The average entry temperature of the cold water was of 21°C.

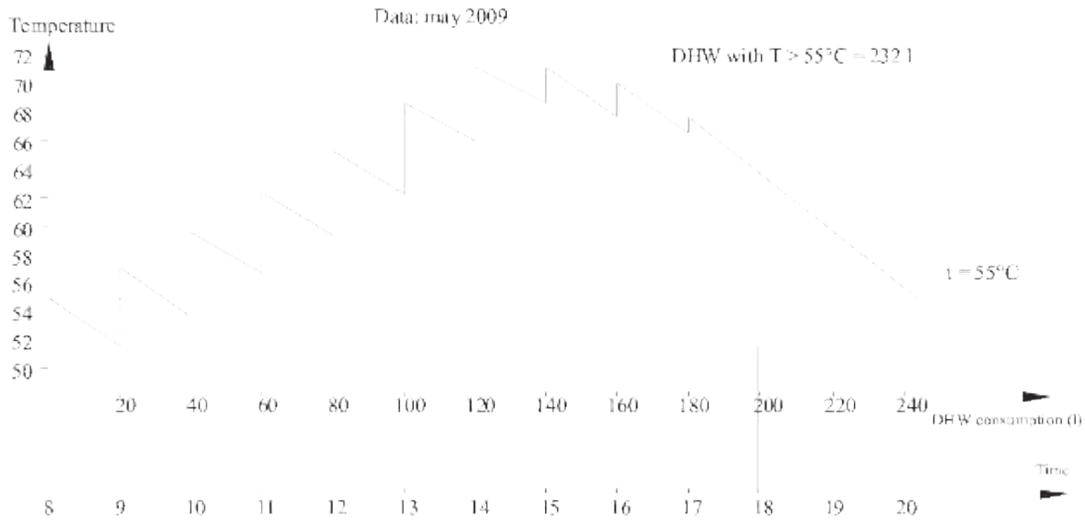

Figure 8 – Diagrame for DHW produced in warm season

The solar radiation measured during the entire test performing was of:

Table 1 - Solar power in time, in warm season

Time	8	9	10	11	12	13	14	15	16	17	18
Solar power	462	683	821	964	1012	1102	933	768	563	329	218

The measurement of the quantity of water produced in the cold season

For measuring the quantity of energy was simulated a consumption cycle consisting of 10 sections of 10 l each with a 100 l overall during an interval of 5 hours starting from a temperature of 40°C. After consuming the 100 l it was continued the consumption until the temperature decreased to 40°C, being measured the total amount of hot water used. The temperature of the heated water was measured at the mixing tap fixed on 40°C The results are shown in figure 9.

The test was performed in March 2009.

The average entry temperature of the cold water was of 9°C.

Figure 9 – Diagrame for DHW produced in cold season

The values of the solar radiation measured at the end of the test were of:

Table 2 - Solar power in time, in cold season

Time	10	11	12	13	14	15
Solar power	267	394	563	858	688	424

The drop of temperature in the solar boiler was of about 5°C in 48 h as it may be seen in the following graphic:

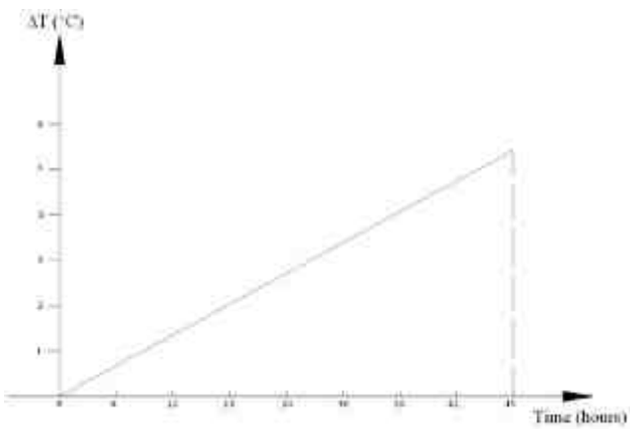

Figure 10 – Temperature decreasing in solar boiler, in 48 hours

5. **Conclusions**

Results presented prove that this installation, which uses 2 solar panels, each one with an area of about 2 m^2, meets the requirements for DHW of a 3-4 person family, to a percentage of 100% during hot season and 50% during cold season; undertaking several changes, this installation can also be combined with other sources of generating DHW or house heating sources, with significant savings.

Last but not least this method for producing thermal energy is completely non aggresive for the environment which involves positive effects upon its safety and good preservation and also upon the saving of fossil fuel resources.

REFERENCES

[1]. RENEWABLES GLOBAL STATUS REPORT – 2009 update

[2]Armin Temessl, Werner Weiss – Instalaþii solare – Proiectarea º i construcþia instalaþiilor solare, MAST Publishing House – 2008.

[3]. Duffie, J.A & Beckman, W.A – Solar energy thermal proces –John Wilei &sons Publishing House, 1974

[4]. Îndrumar de eficienþã energeticã pentru clãdiri – IP Consult Grup, Brãila, 2003

[5]. Catalogues ROMSTAL, BUDERUS, RESOL, ARMACELL, FERROLI

[6]. TEHNICA INSTALAÞIILOR - magazine collection

AUTHORS INDEX

A

Abraham, Bela
pg. 250, 265

Alexandrescu, Stefan
pg. 314

Anghel, Sava
pg. 295, 403

Avram, Mihai
pg. 167

Avramescu, Norvegia Elena
pg. 410

Avramescu, Valeriu
pg. 410

B

Badea, Dan C.
pg. 87

Banu, Valeriu
pg. 167

Banyai, Daniel
pg. 50, 340

Barbu, Valentin
pg. 176

Balasoiu, Victor
pg. 72, 97

Barglazan, Mircea
pg.97

Biolan, Ilie
pg. 291, 430, 308

Blejan, Marian
pg. 202

Boettcher, Britta S.
pg. 76, 222

Bogatu, George
pg. 236

Bogatu, Lucian
pg. 167

Bordeaşu, Ilare
pg. 72, 97

Brabie, Gheorghe
pg. 366

Bratanov, Daniel
pg. 46

Bucsan, Constantin
pg. 167

Bucur, Daniel
pg. 430

C

Calfa, Daniel
pg. 336, 366, 397, 416

Cherecheş, Tudor
pg. 129, 423

Chintoanu, Mircea
pg. 265

Chiriță,Constantin
pg. 336, 366, 385, 397, 406, 416

Chrostowski, Henryk
pg. 14

Cociu, Alexandru
pg. 259, 286

Codreanu, Norocel-Dragoş
pg. 197

Cojocaru, Iosif
pg. 259, 286, 350, 380

Constantin, Anghel
pg. 208

Constantin, Nicolae
pg. 286, 380

Constantinescu,
Luminita-Mirela
pg. 117

Coptu, Alexandru
pg. 385

Costache, Ion
pg. 241

Cristescu, Corneliu
pg. 37, 135, 154, 172

D

Daia, Florian-Petre
pg. 141

Diaconescu, Eugen
pg. 117

Domagała, Zygmunt
pg. 26

Dorgeloh, Elmar
pg. 76

Drăgănescu,
Constantin-Nicolae
pg. 245

Drumea, Andrei
pg. 124, 151

Drumea, Petrin
pg. 37, 135, 154, 172

Duca, Corneliu Constantin
pg. 336, 366, 385, 397, 416

Duminica, Despina
pg. 167, 314

Dumitrescu, Catalin
pg. 192, 356, 442

Dumitrescu, Liliana
pg. 300

Dutu, Iulian
pg. 124, 182, 392

F

Fatu, Aurelian
pg. 37

Fedorov, Alexandru
pg. 202

Filipoiu, Ioan Dan
pg. 176

Frunză, Mircea
pg. 385

G

Garjoaba, Mihu
pg. 236

Georgescu, Florin
pg. 356, 442

Gheorghe, Viorel
pg. 167

Gherghel, Nicolae
pg. 104

H

Hajjam, Mohamed
pg. 37

Hanganu, Constantin Adrian
pg. 104, 336, 406, 416

Haraga, Georgeta
pg. 274, 295

Homutescu, Tiberiu
pg. 423

I

Ilie, Ioana
pg. 202

Ion Guță, Dragoş Daniel
pg. 61, 214

Ionescu, Ciprian
pg. 188, 197

Ioniță, Niculae
pg. 208

J

Jecu, Radu
pg. 329

K

Kędzia, Krzysztof
pg. 26

Khan, Patricia
pg. 76

L

Laurian, Tiberiu
pg. 176

Lefter, Emilian
pg. 117

Lepadatu, Ioan
pg. 214

Levei, Erika
pg. 250, 265, 282

Leu, Ion
pg. 380

Lupu, Bogdan
pg. 124, 202

M

Maican, Edmond
pg. 192

Macanescu, Mihai
pg. 319

Manea, Dragoş
pg. 350

Marcu, Lucian
pg. 50, 340

Mardare, Florica
pg. 291

Marghescu, Cristina
pg. 188, 197

Marin, Alexandru
pg. 87, 192

Marin, Daniel
pg. 314

Marin, Eugen
pg. 286, 350

Mădăras, Lucian
pg. 97

Miclean, Mirela
pg. 250, 265, 282

Mihai, Niculaie
pg. 79, 113

Mirea, Adrian
pg. 208, 403, 442

Murad, Erol
pg. 129, 192, 274, 295, 372

N

Necula, Carmen
pg. 308

Nascutiu, Lucian
pg. 50, 340

Nemtoiu, Simona Greta
pg. 141

Nica, Victor
pg. 202

Nicolescu, Constantin
pg. 291, 430, 308

Niculae, Nicusor
pg. 308

Nițu, Grigore
pg. 300

O

Olaru, Adrian
pg. 145

Olaru, Serban
pg. 145

Orasan, Catalin Horia
pg. 410

Orasanu, Gheorghe
pg. 410

P

Pascu, Maria
pg. 241

Pawelski, Zbigniew
pg. 31

Păun, Loredana Theodora
pg. 410

Pirnă, Ion
pg. 286, 350, 380

Pleşu, Gheorghe
pg. 366, 385, 397, 416

Plotog, Ioan
pg. 87

Popczyk, Zygmunt
pg. 14, 26

Popescu, Ioana-Carmen
pg. 329

Popescu, Teodor Costinel
pg. 214, 314

Popoviciu, Mircea Octavian
pg. 72, 97

Predescu, Cristian
pg. 372

Prokopowicz, Jarosław
pg. 26

Prunaru, Diana
pg. 245

R

Radulescu, Alexandru
pg. 236

Radu, Sebastian
pg. 256, 270

Rădoi, Radu
pg. 79, 113, 182, 392

Rădulescu, Gabriel
pg. 79, 113, 182, 392

Rădulescu, Mircea
pg. 208

Rizoiu, Gheorghe
pg. 372

Roman, Cecilia
pg. 250, 282

Roman, Marius
pg. 265

Rotariu, Adrian
pg. 423

Rotaru, Dănuț
pg. 208

S

Safta, Victor-Viorel
pg. 274, 295

Sava, Alin-Constantin
pg. 423

Sauciuc, Radu
pg. 300

Seiciu, Petre Lucian
pg. 46, 176

Sima, Cristian
pg. 372

Sîrbu, Dumitru
pg. 416

Sorica, Cristian
pg. 350

Stan, Marius
pg. 259

Stanciu, Lucian
pg. 259

Stroiță, Cătălin
pg. 97

Szadkowska, Jolanta
pg. 14

Ş

Şenilă, Lăcrimioara
pg. 265

Şenilă, Marin
pg. 250, 265, 282

Şovăială, Gheorghe
pg. 291, 430

Ştefănescu, Mariana Florentina
pg. 300

T

Tămaş, Cosmin
pg. 151, 165, 188, 197

Tănăselia, Claudiu
pg. 250, 282

Tiriplica, Ion
pg. 141

Tiriplica, Petre
pg. 141

Toma, Alexandra
pg. 236

Toma, Magdalena
pg. 274

Topologeanu, Marian
pg. 256, 270

Ț

Țarcă, Radu Cătălin
pg. 270

V

Vaida, Liviu
pg. 50, 340

Vasile, Alexandru
pg. 124

Vărzaru, Gaudențiu
pg. 151

Veber, Laurentiu
pg. 356

Voicu, Emil
pg. 259

Vulpe, Victor
pg. 165

Z

Zapciu, Aurel
pg. 67, 360

COMPANIES INDEX

A

ALMA ENGINEERING Ltd.
pg. 87

ANIF
pg. 241

C

CCIVL
pg. 372

CCMMM
pg. 87

CIT-CENTIREM
pg. 329

Cracow University of Technology
pg. 14

E

Electroputere Craiova
pg. 245

G

General Fluid S.A.
pg. 314

H

HERVIL S.A.
pg. 208, 300

HIDROELECTRICA SA Sucursala Hidrocentrale TG-JIU
pg. 141

HYDRAMOLD S.R.L.
pg. 336, 266, 285, 416

I

ICTCM SA Bucuresti
pg. 256, 270, 410

INCDA Fundulea
pg. 259, 286

ICCPET - OVM
pg. 236, 319

INCDO-INOE 2000, ICIA
pg. 250, 265, 282

INTEC
pg. 410

INCDIF-ISPIF
pg. 291, 430, 308

INCDMRR
pg. 329

INCDMTM
pg. 67, 208, 360

Institute of Machine Design and Operation, Wroclaw University of Technology
pg. 14, 26

Institutul National de Inventica, Iasi
pg. 385

INMA
pg. 259, 286, 350, 380

INOE 2000 -IHP
pg. 37, 61, 79, 113, 124, 135, 154, 172, 182, 192, 202, 208, 214, 291, 295, 300, 308, 314, 356, 392, 403, 430, 442

L

Laboratoire de Mécanique des Solides, Angouleme-FRANCE
pg. 37

M

Marvior Expert SRL
pg. 372

MAT Craiova
pg. 380

MNA PRODCOM
pg. 423

P

PRESTCOM
pg. 356

R

ROMFLUID S.A
pg. 208, 403, 442

RWTH Aachen University (PIA e.V.), Germany
pg. 76, 222

S

SEBA Industrial SRL Bucuresti
pg. 256, 270

SPP, Academia Tehnică Militară
pg. 129

U

Universitatea din Oradea
pg. 270

Universitatea din Pitesti
pg. 117

UPB
pg. 46, 87, 124, 129, 145, 151, 165, 167, 176, 188, 192, 197, 274, 295, 300, 314, 372

Univ. Politehnica Timisoara
pg. 72, 97

University of Ruse
pg. 46

USAMV Iasi
pg. 430

Universitatea Tehnica din Cluj-Napoca
pg. 50, 340

Univ. Tehnica „Gheorghe Asachi” Iasi
pg. 104, 336, 366, 385, 406, 416

V

Vehicle Research Institute -Technical University of £ódŸ
pg. 31

Wroc³aw University of Technology
pg. 14, 26